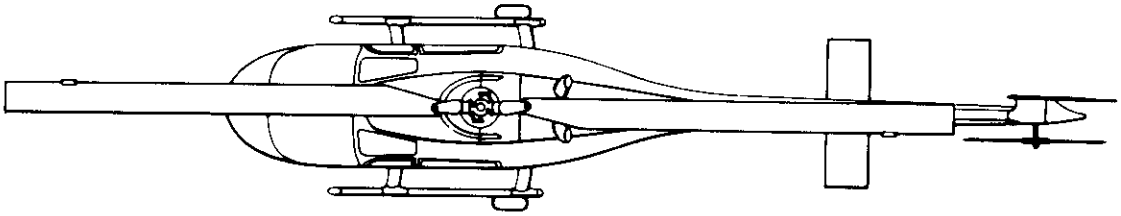
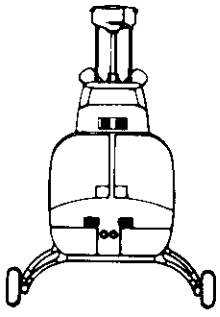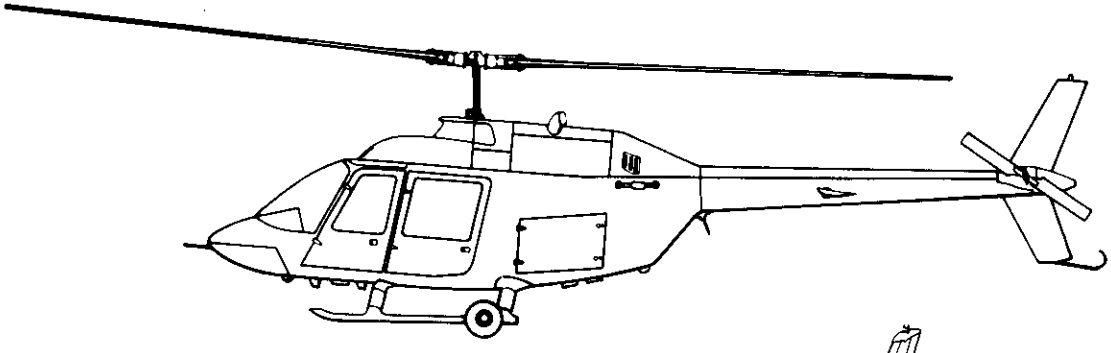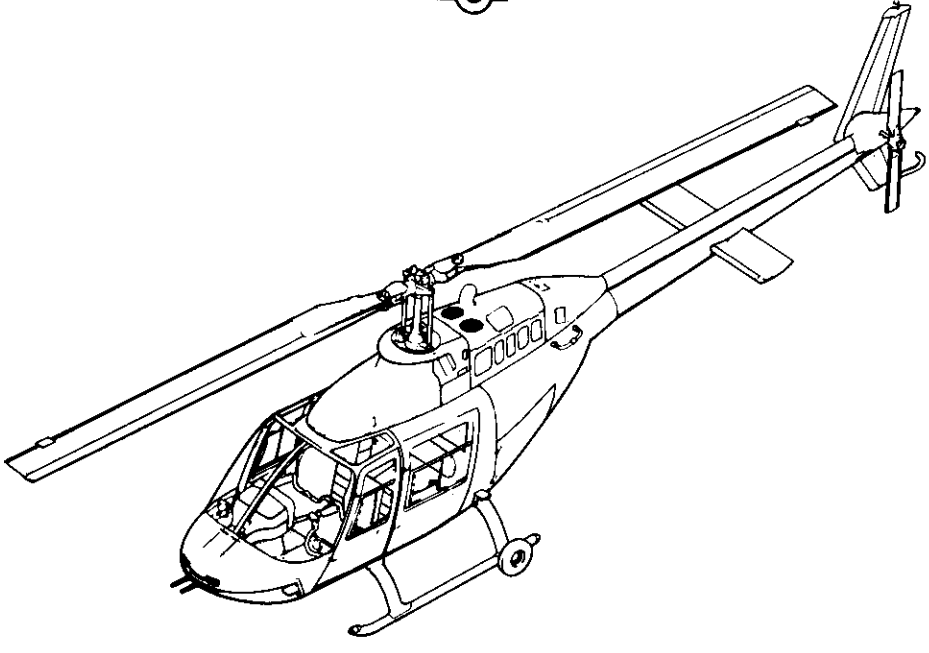
TH-57C