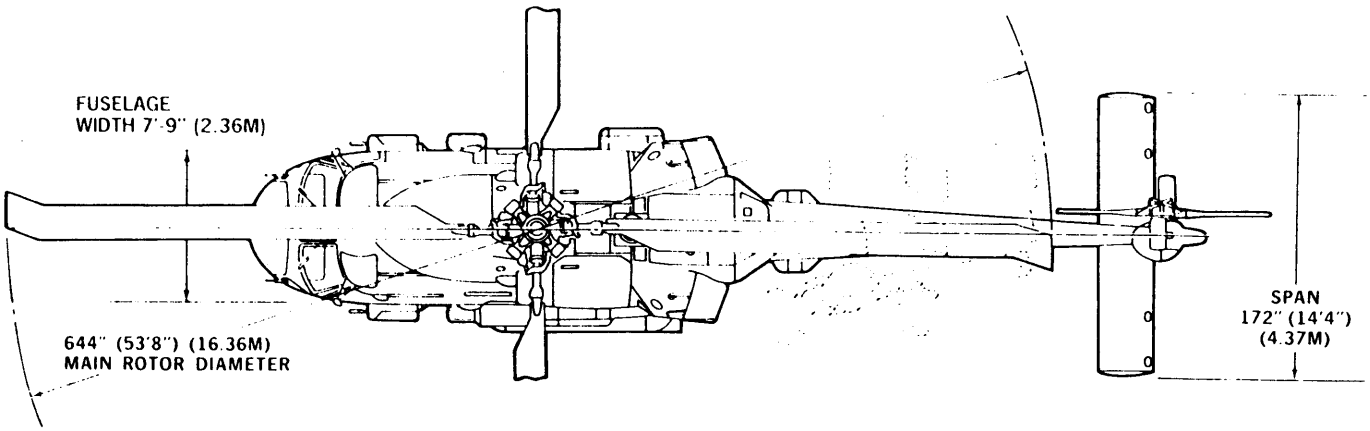
FUSELAGE
WIDTH 7'-9" (2.36M)
644" (53'8") (16.36M)
MAIN ROTOR DIAMETER
SPAN
172" (14'4")
(4.37M)

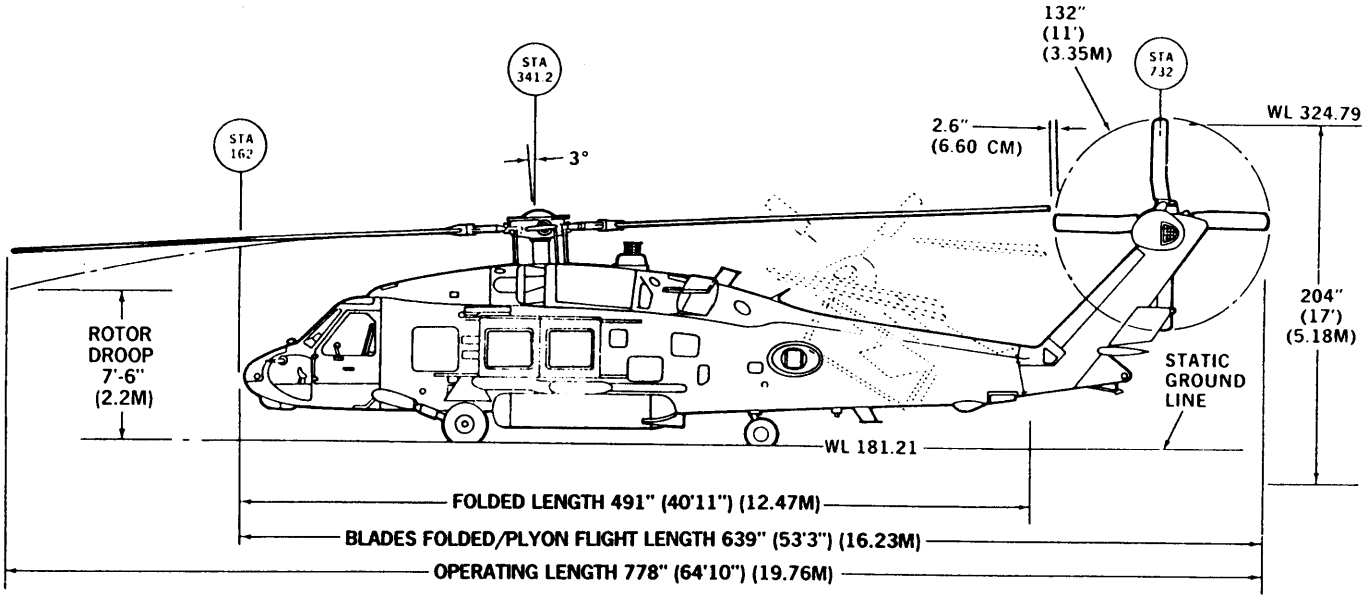
STA
341.2
STA
162
STA
732
3°
132"
(11')
(3.35M)
2.6"
(6.60 CM)
WL 324.79
204"
(17')
(5.18M)
ROTOR
DROOP
7'-6"
(2.2M)
STATIC
GROUND
LINE
WL 181.21
FOLDED LENGTH 491" (40'11") (12.47M)
BLADES FOLDED/PLYON FLIGHT LENGTH 639" (53'3") (16.23M)
OPERATING LENGTH 778" (64'10") (19.76M)

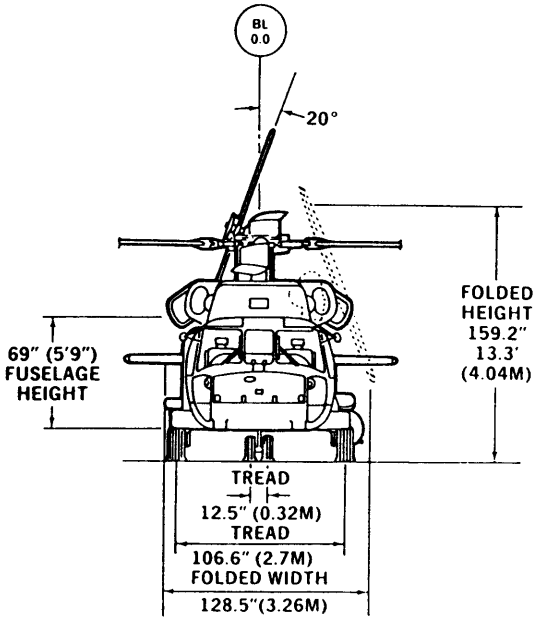
BL
0.0
20°
FOLDED
HEIGHT
159.2"
13.3'
(4.04M)
69" (5'9")
FUSELAGE
HEIGHT
TREAD
12.5" (0.32M)
TREAD
106.6" (2.7M)
FOLDED WIDTH
128.5"(3.26M)