FROGMEN! Seabee Divers & the Navy's Underwater Construction Teams

UNITED STATES NAVY

SEABEE

DOUBLE ISSUE 2004

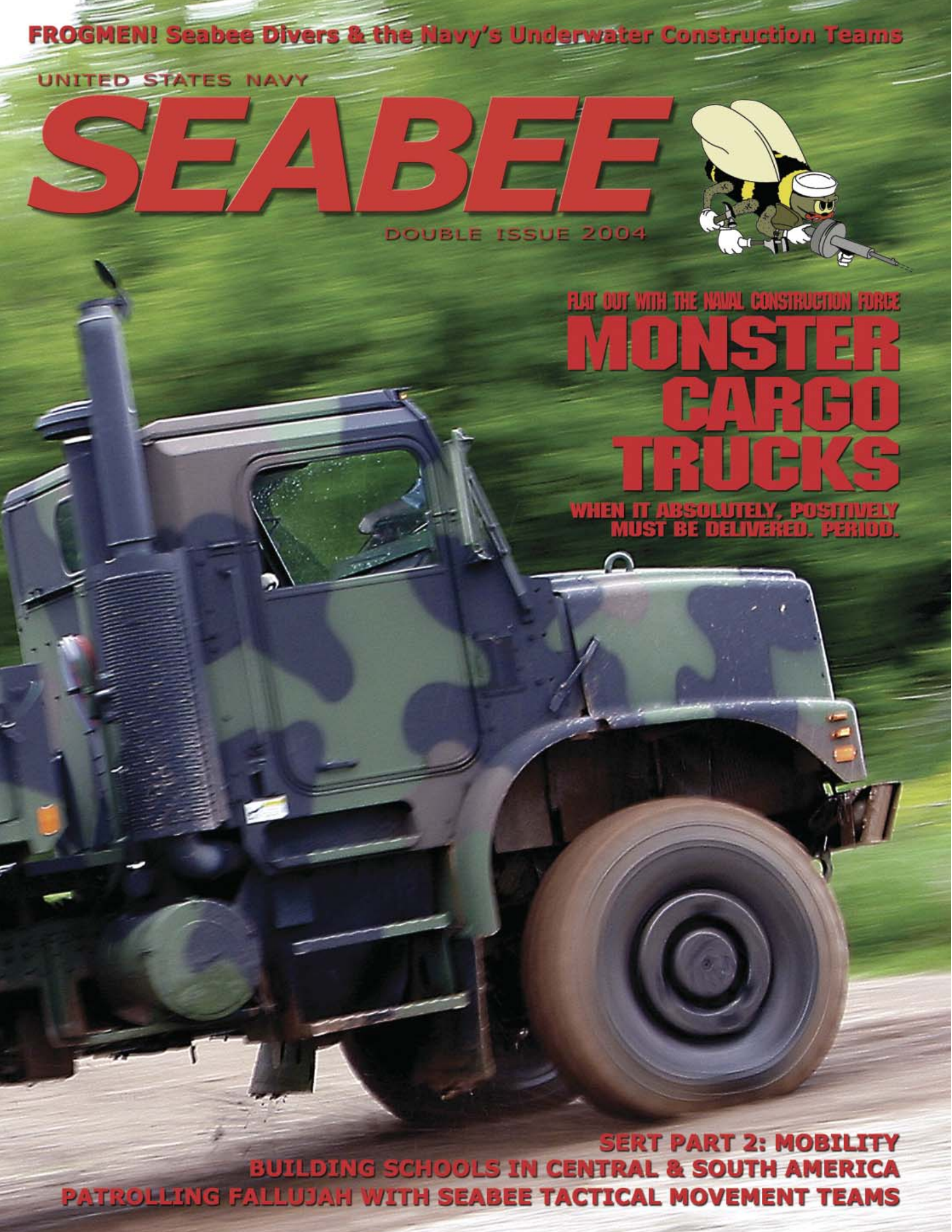

FLAT OUT WITH THE NAVAL CONSTRUCTION FORCE

MONSTER CARGO TRUCKS

WHEN IT ABSOLUTELY, POSITIVELY MUST BE DELIVERED. PERIOD.

SERT PART 2: MOBILITY

BUILDING SCHOOLS IN CENTRAL & SOUTH AMERICA

PATROLLING FALLUJAH WITH SEABEE TACTICAL MOVEMENT TEAMS

"There are few situations on Earth where U.S. military deploy that Seabees are not also on the scene, providing security, hammering together bunk beds, or erecting a galley or a field hospital or stringing power lines—performing any of a thousand essential tasks in any of a number of locations you can see most evenings on CNN."

— Harrell T. Richardson
Force Master Chief Petty Officer of the Seabees

Chief Construction Electrician Brian Dunleavy and a security guard inspect highway damage on a Fallujah roadway to determine if repairs need to be made.
U.S. NAVY PHOTOGRAPH BY PH2(SCW/FMF) ERIC POWELL

INSIDE: DOUBLE ISSUE 2004

SEABEE MAGAZINE PHOTOGRAPH BY PH2 ERIC POWELL

DEPARTMENTS

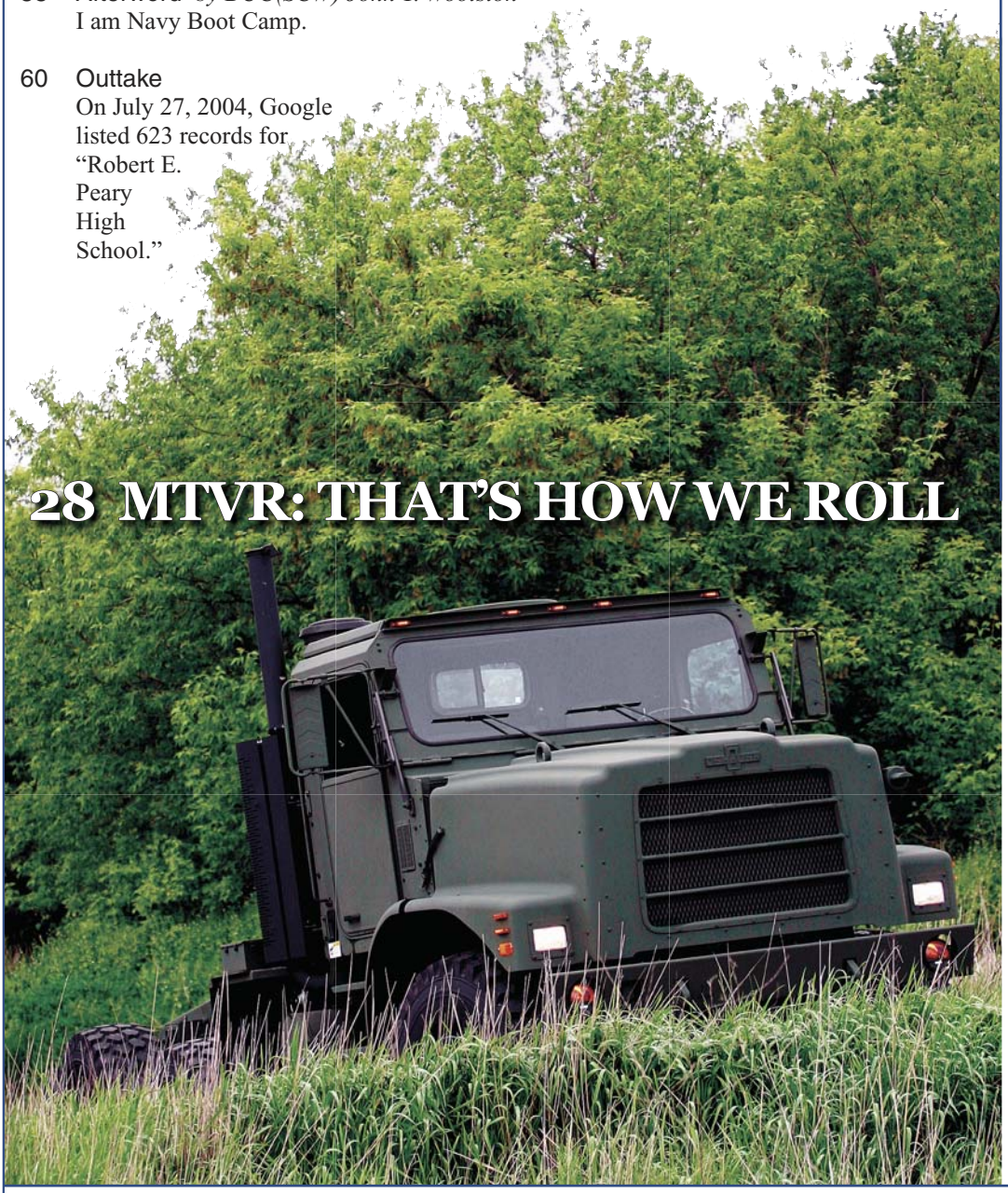

28 MTVR: THAT'S HOW WE ROLL

VOLUME 3, NOS. 1 & 2

SEABEE

MILITARY RECIPIENTS
Units or organizations with Seabees assigned are authorized no-cost distribution of *SEABEE* Magazine. Send requests on official letterhead signed by the commanding officer or officer in charge, and citing number of unit personnel, to the editor at the magazine's postal address or fax number shown below.

CIVILIAN SUBSCRIPTIONS
Paid subscriptions to the official magazine of the U.S. Navy Seabees, *SEABEE* Magazine (ISSN 1546-8429), are available from the Superintendent of Documents, P.O. Box 371954, Pittsburgh, PA 15250-7954, or call (202) 512-1800 and ask for the publications order desk. The best method, however, for obtaining a paid subscription is to point your Web browser to **http://bookstore.gpo.gov** and enter the Search term *SEABEE*. This returns a means to enter your subscription via a secure credit card transaction. Subscription prices are $25/year $7/issue FPO/APO/domestic and $36/year $9.80/issue foreign.

POSTMASTER
Send address corrections to the editor at the magazine address shown below.

AUTHORIZATION
The Secretary of the Navy has determined this publication is necessary in the transaction of business required by law of the Department of the Navy.

EDITORIAL
SEABEE Magazine (formerly *Beeline*) is published quarterly by the Naval Facilities Engineering Command public affairs office from the historic Washington Navy Yard, "the Quarterdeck of the Navy." Letters and electronic mail are welcome on all Seabee-related topics and, if published, are subject to editing for length and clarity. Written and photographic submissions that show active duty and reserve Seabees safely at work and at play are strongly encouraged. We prefer to receive all written and photographic submissions by e-mail to **seabeemagazine@navy.mil**. Film or digital images should include captions, be unmodified, and digital files should measure at least 300 dpi at 5x7 inches. All submissions must include the author's full name, rank/rate, postal address, duty contact telephone number(s) and e-mail address. Submissions by regular postal mail are strongly discouraged due to security precautions that may damage fragile contents. If necessary, send all postal mail to:

NAVAL FACILITIES ENGINEERING COMMAND
Attn: Editor, *SEABEE* Magazine (Code PA)
1322 Patterson Avenue SE Suite 1000
Washington Navy Yard DC 20374-5065

Military address corrections, story and photo submissions and requests for writer's guidelines may be sent to the magazine's postal or e-mail addresses. *Paid-subscriber address corrections must be sent to the GPO address above.*

CONTACTS
E-mail: seabeemagazine@navy.mil
Voice: (202) 685-9024 or DSN 325-9024
Fax: (202) 685-1484 or DSN 325-1484

To learn more about the Seabees and Seabee opportunities, discover us on the Internet at **www.seabee.navy.mil**. For information on Navy jobs, see **www.navy.com**. To learn more about the technical Civil Engineer Corps and the global activity of the Naval Facilities Engineering Command, we invite you to visit the NAVFAC website at **www.navfac.navy.mil**.

Stay Navy. Stay Seabee.

FOREWORD

HARRELL T. RICHARDSON
FORCE MASTER CHIEF PETTY OFFICER (SCW) OF THE SEABEES

BY ITS DEFINITION, the nature of military service is to *serve*—the nation, its purposes, its citizens and our families. In the Seabees, we know, understand and accept that basic rule as our everyday marching order.

But in recent months, hard-working Seabees have been tested in ways and by events not witnessed since the days of the war in Vietnam.

As you will read about later in this issue, seven of our Seabees were killed in Iraq in separate attacks during late April and early May, and more have been injured in insurgent activity. Rear Adm. Loose and I have personally visited many of the injured at the National Naval Medical Center in Bethesda, Md., and we have respectfully attended many of the funerals of the deceased.

The entire Seabee Nation grieves for the family members left behind. We stand ready to assist them and the injured Seabees in any way possible. It's the least we can do to support brave Sailors who embody the basic *Can Do!* spirit that has been ingrained in every Seabee, whether veteran, retired, active duty or Reserve.

In fact, the casualties were members of Naval Mobile Construction Battlion (NMCB) 14, a Reserve Seabee battalion homeported in Jacksonville, Fla. NMCB 14 is now on a recall to active duty and is serving in Iraq with great distinction.

As demonstrated by NMCB 14, the quality of our Reserve components has never been higher, nor has there been a greater need for maintaining a professional Reserve Seabee force.

There are few situations on Earth where U.S. military deploy that Seabees are not also on the scene, providing security, hammering together bunk beds, or erecting a galley or a field hospital or stringing power lines—performing any of a thousand essential tasks in any of a number of locations you can see most evenings on CNN.

Active duty Seabees supply full-time contributions to getting those big jobs done, but the scope and power of being a Reserve Seabee is more important than ever.

Seabees often can't get those big jobs done without the considerable cargo capacity of the amazing Medium Tactical Vehicle Replacement, or simply the MTVR as we usually call it. If the truck fleet was well expanded by the cargo version, just wait until you see the three new variants on the way now.

The MTVR corral grows shortly with the addition of a dump version, a monster wrecker, and the Seabee-exclusive tractor for pulling low-boys and heavy equipment. Our cover story this issue is a complete rundown on the MTVR variants—when it absolutely, positively must be delivered. Period.

Also inside these pages are accounts of Seabees in all kinds of action, from the Tactical Movement Teams of NMCBs 5, 14 and 74 providing convoy security escorts in *Operation Iraqi Freedom* to Bees building schools in Honduras. We also catch up the next chapter of the Seabee Engineer Reconnaissance Team story, including a first-person account of a SERT Seabee who has been on numerous missions in Iraq.

Finally, we're very happy to report that the extraordinary editorial work being performed in this publication by Seabees, battalion journalists, photographers and public affairs officers has been recognized by the Navy's Chief of Information.

In a Navy message, Rear Adm. T. L. McCreary announced that your *SEABEE* Magazine was chosen as the best Magazine-Format Publication in the United States Navy. See page 18 for more details. You should be as proud as we are—and keep up the award-winning work.

As always, stay in touch with story ideas, observations or comments via e-mail to seabeemagazine@navy.mil.

SEABEE

NAVAL FACILITIES ENGINEERING COMMAND

Michael K. Loose
Rear Admiral, CEC, USN
COMMANDER
Chief of Civil Engineers

John E. Roark, Jr.
EXECUTIVE DIRECTOR

Harrell T. Richardson
FORCM (SCW)
FORCE MASTER CHIEF PETTY OFFICER
OF THE SEABEES

Virginia Bueno
PUBLIC AFFAIRS OFFICER

FIRST NAVAL CONSTRUCTION DIVISION

Charles R. Kubic
Rear Admiral, CEC, USN
COMMANDER

Raymond K. Alexander
Rear Admiral, CEC, USNR
DEPUTY COMMANDER

Kevin C. Timmons
CMDCM (SCW)
COMMAND MASTER CHIEF

Daryl C. Smith
PUBLIC AFFAIRS OFFICER

STAFF

Daniel Charles Ross
Chief Journalist, USNR (Active)
EDITOR IN CHIEF
Naval Facilities Engineering Command
Public Affairs & Communications

OIF II Bureau Chief
JOC Siegfried Bruner, USNR (Active), Camp Fallujah

Senior Contributors
JOC Kevin Elliott, USNR
Patrick Peterson, *Biloxi Sun Herald*
PH1(AW) Arlo Abrahamson
JO1(AW) Stan Travioli

CONTRIBUTORS
CAPT David Balk, CDR Meg Reed, USNR
FLTCM(SW/AW)Buck Heffernan
BUC(SCW) John F. Woolston, EOC(SCW/SW) Paul Celli
LT Chuck Bell, LT Marc Massie, LT Joel D. McMillan
ENS Tony Hollobaugh, JO1 Lynn Kirby, SSgt. Sarauth Pinthong
SSgt. Nathan L. Hanks Jr., JO1 Jess Johnson
JO1 Philip Achten, BU1 Jerome Kirkland
JO1(SCW) Scott Sutherland, PH1(AW) R.M. Andrade
BU1(SCW/SW) Douglas W. Montgomery
PH2(SCW/FMF) Eric Powell, Miriam Gallet
PH2 Laura Heinkel, JO2 Mike England, JO2 Landon Mason
JO2 Jennifer Valdivia, JO2 Leslie A. Shively, USNR
PH3 Clarck Desire, CM3(SCW) Michael J. Kiernan
PHAN John P. Curtis, Brian Anderson, Rick Latoff
Lauren Glenn & Ernst Peters, *The Ledger*

and every Seabee everywhere, everyday.

2003 Chief of Information Merit Award
Best Magazine-Format Publication

SEABEE **Magazine is the publication of the United States Navy Seabees, Active Duty and Reserve, celebrating 62 years of proud Seabee service.**

F.O.B.

Seabee ingenuity and sweat equity created new vehicle armor for the convoys of *OIF*

STORY AND PHOTOGRAPHS BY CHIEF JOURNALIST SIEGFRIED BRUNER

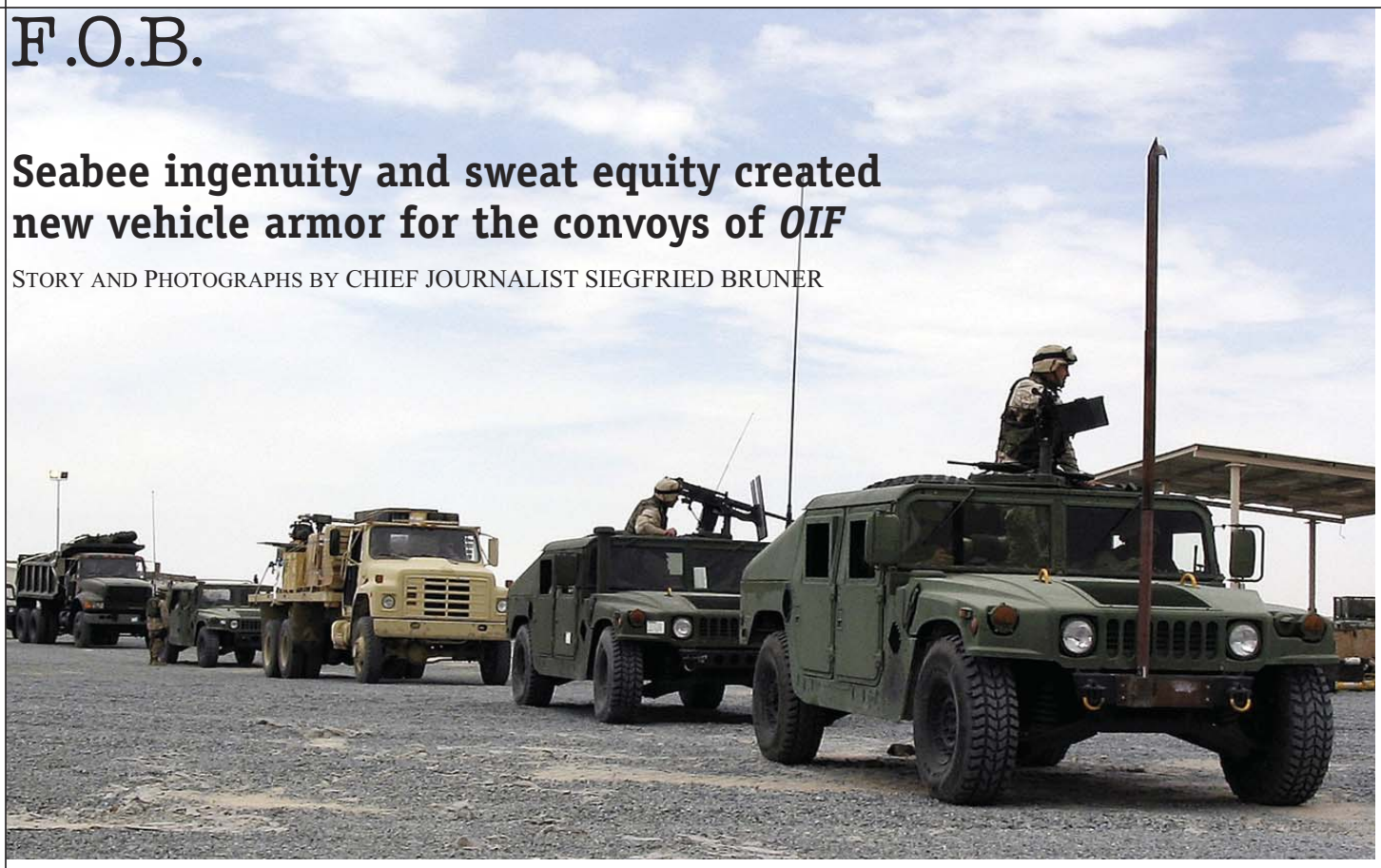

CAMP MOREELL, Kuwait — Seabees from Naval Mobile Construction Battalion (NMCB) 74 used ingenuity and initiative to fabricate vehicle protection for convoys heading into harm's way during Operation Iraqi Freedom in April.

Steelworker 1st Class (SCW) Jeffrey Ballas and a crew of eight other steelworkers from NMCB 74 developed an enterprising armor concept and presented the cardboard templates to the 1st Marine Expeditionary Force Engineer Group (MEG) for review.

Once the brainstorm was approved, huge plates of steel were worked around the clock in two shifts to outfit 100 trucks with armor inside and out.

The steelworkers cut plate steel for a week and a half, performing a well-choreographed armor installation rodeo.

The goal is effective protection for all types of vehicles and the warriors inside.

"I was really proud of my guys," Ballas said. "The night crew did the cutting and fabricating, and the day crew did the finishing and installation. They did what comes natural to Seabee steelworkers— they took the bull by the horns."

Along with external armor, seats were covered with Kevlar blankets or Kevlar vests. Convoy personnel also wear body armor. As shipments of armor from Marine Logistics Command began to arrive, a combination of locally fabricated and pre-fab armor was installed.

"We were able to get our vehicle doors 100 percent up-armored even before we got all our shipments [of manufactured armor] in," said LT Stephen Padhi, a member of the future operations team for the MEG.

Combined, these force-protection measures well help ensure that everyone aboard is as safe as possible. A little ingenuity and a lot of sweat equity paid big dividends for Seabees and Marines working convoys out of this key staging base in Kuwait.

Raw steel plate armor.

Seabees Gather to Honor Their Fallen Comrades

STORY BY JOC SIEGFRIED BRUNER, ENS TONY HOLLOBAUGH & JO2 MIKE ENGLAND
PHOTOGRAPHY BY PH2 ERIC POWELL & MIRIAM S. GALLET

CAMP FALLUJAH, Iraq — Dozens of Seabees from Naval Mobile Construction Battalions (NMCB) 5 and 74 and members of the First Marine Expeditionary Force Engineer Group (I MEG), gathered here May 8 to honor Seabees who were killed in the U.S. mission to *Operation Iraqi Freedom*. All of the dead were recalled Seabee Reservists from NMCB 14, a Reserve battalion mobilized in April.

Seven M-16 assault rifles were carefully placed, muzzle down, on the floor of the chapel here, each accompanied by a pair of desert boots and topped with a Kevlar helmet. Tools commonly used by the individual fallen Seabees were respectfully laid by the boots.

The brief memorial service began with an address by I MEG's commanding officer, Navy CAPT Mark Handley. Handley said that while there was obvious inherent risk in Iraq for Seabees and Marines, they realized they were there to increase the peace.

"These seven Seabees who lost their lives here in Iraq were directly contributing to improving the conditions for sustained peace. They served us proudly and with distinction, and they have built upon the Seabee legacy, which we all humbly enjoy," said Handley.

The address included a few words from CUCM Peter Beckwith, I MEG's command master chief, who observed that all Seabees felt the loss of their shipmates. Chaplain (LT) Marc Massie led the attendees in prayer and read a poem about Seabee pride and sacrifice.

The service ended when all Seabees donned their covers and saluted their fallen comrades as Taps played in the chapel. Later in the day, NMCB 14 held a separate service at a nearby camp.

The seven Seabees killed were Equipment Operator 3rd Class Christopher Dickerson; Hull Technician 2nd Class Jason B. Dwelley; Builder 2nd Class Michael Anderson; Equipment Operator 2nd Class Trace Dossett; Steelworker 2nd Class Ronald Ginther; Builder 2nd Class Robert Jenkins and Construction Mechanic 2nd Class Scott McHugh. All were killed in separate attacks April 30 and May 2.

Dwelley, 31, of Apopka, Fla., and Dickerson, 33, of Eastman, Ga. died April 30 when their military vehicle hit an improvised explosive device while traveling in a convoy that was transporting material from one Seabee camp to another camp.

Anderson, 36, of Daytona, Fla.; Dossett, 37, of Orlando, Fla.; McHugh, 33 of Boca Raton Fla.; Jenkins, 35 of Stuart, Fla. and Ginther, 37 of Auburndale, Fla., were killed May 2 in the Al Anbar province as a result of a mortar attack on the Seabee compound.

The mortar attack occurred as the Sailors were returning their weapons after escorting First Naval Construction Division Commander Rear Adm. Charles Kubic to the base.

"We heard an explosion a distance away, but we didn't take cover because we were used to mortars being fired into the camp all the time," said NMCB 14's Equipment Operator 2nd Class Michael Vorburger, who was injured in the blast.

"The second one caught us off guard," he continued. "The blast took my legs right out from under me and after I realized what happened, I crawled under a Humvee for cover and checked myself for injuries."

Vorburger suffered multiple shrapnel wounds, including one piece that broke his jaw and knocked out some teeth. "After the attack, everyone came together, regardless of branch or rank, to help the injured," Vorburger said.

Naval Reserve Readiness Command (REDCOM) Southeast held a press conference at Naval Air Station Jacksonville in response to the deaths. REDCOM Southeast's commander, Rear Adm. John Stewart, whose purview includes 31 Naval Reserve centers with nine NMCB 14 detachments, expressed sadness at the loss of life. He reaffirmed the battalion's commitment to rebuilding and improving Iraq's battered infrastructure.

"These outstanding Citizen Sailors were serving in Iraq to help rebuild and improve the infrastructure of the once oppressed nation. They were rebuilding schools and helping to restore water and electrical power, they were serving in a humanitarian capacity, going into harm's way to give others the chance for freedom," Stewart said. "This loss, however, does not cause us to waiver in our conviction to complete our mission."

After the press conference, a few of the Sailors who knew the victims spoke with members of the local media.

" Everyone is dealing with this in their own way," said Senior Chief Construction Mechanic (SCW) Christopher Hanks, NMCB 14 readiness support supervisor. "This battalion is one big family. We were strong before this happened and we're stronger now," he added.

The battalion was issued orders to mobilize Feb. 13. Its mission includes providing responsive military construction support to the Navy, Marine Corps

U.S. Navy Seabees attend a memorial service (above, left) honoring seven killed during a recent attack while serving in Iraq. All died April 30 and May 2 in the Al Anbar province as a result of hostile fire and were assigned to NMCB 14 homeported in Jacksonville, Fla. (above) Naval Reserve Readiness Command Southeast Commander Rear Adm. John M. Stewart Jr., held a press conference May 5 addressing the tragic loss. (below) Reporter Jim Piggott and cameraman Randy Sell, WJXT TV News 4 in Jacksonville, Fla., conduct an interview with Seabee EO2 Michael Vorburger, injured in a mortar attack.

and joint forces as well as constructing base facilities and conducting defensive operations. The Reserve unit, which arrived in Iraq in early April, had been doing humanitarian work, repairing electrical and water systems and fixing sewage problems.

About 400 Sailors in the 730-person unit were sent to Iraq.

Twelve NMCB 14 Seabees arrived at Naval Hospital Jacksonville May 10 to continue their recovery from injuries sustained in Iraq. The Seabees were injured during the May 2 attack that claimed the lives of five Seabees and injured 34 more.

U.S. NAVY PHOTO BY JO2 MIKE ENGLAND

Vorburger he was glad to be back home and is looking forward to a complete recovery.

Vorburger also looks forward to getting back to his day job as an erosion control services crew leader—but he still plans to stay in the Naval Reserve until retirement.

"My boss has been behind me 100 percent," Vorburger said. "He called the other day and said that I could take all the time off I need to recover," he said. "I plan on spending as much time as I can with my wife and kids."

Reserve Seabee Battalion Blends OIF Service With A long, Storied History

History was in the making as Naval Mobile Construction Battalion (NMCB) 14 prepared in February for deployment in support *Operation Iraqi Freedom II*. The Seabees, based in Jacksonville, Fla., quickly made their presence felt by improving the lives of the Army, Marine and Navy members on camps throughout Iraq.

Many of the camps require skills that Seabees possess. Quality-of-life projects have been the primary focus of the Bees since they arrived in Iraq in early April. They have worked at Ar Ramadi, northeast of Baghdad, and several other places in the Sunni Triangle. The unit works in an area with NMCB 74, based in Gulfport.

Projects included repairing roofs on tents after a recent sandstorm, installing air conditioners, repairing the Army's broken air conditioning units, installing new wiring, installing light fixtures, installing water heaters, repairing generators, providing protective barriers, fixing Bobcat construction vehicles, hauling fill and gravel, repairing walkways, constructing office spaces and other projects that had a direct impact on the quality of life of Soldiers, Marines and Seabees who inhabit forward operating bases in central Iraq.

"We're glad the Seabees are here," said Sgt. Jerry Spears from the Army's 1st Battalion, 16th Infantry. Spears' unit had been in Iraq for eight months and the Bees of NMCB 14 installed air conditioning in a berthing space to make his unit more comfortable. NMCB 14 also repaired showers and bathrooms for Spears' unit.

NMCB 14 Seabees also are building recreational facilities for the men and women of the armed forces stationed in Iraq at various locations. Recently, Seabees from NMCB 14 set up a facility for the Marines to be used as a gym.

"It's always good to help our brothers in the Marine Corps," said Construction Electrician 2nd Class Carlo Galluccio. Galluccio was one of several electricians and builders who helped build floors, improve walls, install lights and electrical outlets in several buildings and tents to make functional recreational facilities for the Marines, who face many of the toughest of challenges in this austere and unpredictable environment.

"It's all about working as a team," said Senior Chief Builder John Bonaccorso, NMCB 14's Bravo Company chief petty officer.

Recently, the battalion's Bees have focused on force protection, convoy security and camp improvement projects and they looked forward to working directly with the Iraqi people.

NMCB 14 is a Reserve Seabee battalion headquartered in Jacksonville, Fla. Composed of nine Seabee detachments from Florida, Georgia and Puerto Rico, it's a rebirth of the 14th Naval Construction Battalion commissioned July 1942 at Camp Allen, Norfolk, Va.

The battalion arrived at Guadalcanal in November 1942 when combat still raged there—only the second Seabee unit to land in the Solomon Islands. After a year at Guadalcanal constructing airfields and other facilities, NCB 14 returned to the continental United States for rest and additional training. In October 1944, NCB 14 deployed to Pearl Harbor and Okinawa, Japan.

The unit has a long and storied history of serving its country in times of need.

REPORTER'S
NOTEBOOK:

Keeping a Father's Promise
Volunteers Build a Little Girl a Special Treehouse

STORY BY LAUREN GLENN
PHOTOGRAPHY BY ERNST PETERS

AUBURNDALE, Fla. — If Ronald Ginther was looking down on his family from heaven June 25, then he was bound to see Alayna first. After all, she could now climb a little closer to the sky.

Before Steelworker 2nd Class Ginther, a Seabee Naval Reservist, left for Iraq, he had promised his 9-year-old daughter a treehouse. A group of volunteers helped him keep his word.

"He told the truth," Alayna said, surrounded by six of her friends, sitting on the floor of the new treehouse in her back yard. "He kept his promise."

On May 2, Ginther, a Seabee with Naval Mobile Construction Battalion 14 from Tampa, along with four other Seabees and an Army soldier were killed in a mortar attack at Camp Fallujah in the Al Anbar province near Ramadi.

On that Friday in June, volunteers from The Home Depot, with friends and family members, surprised Alayna with her own treehouse. It actually isn't in a tree at all, but it's next to one, and that, Alayna said, is just fine.

Above, Alayna Ginther, 9, high-fives a line of "Team Depot" workers after she was surprised at her home with a new treehouse built by volunteers in Auburndale, Fla., June 25. Below, the volunteer group finishes tidying up prior to occupancy. Alayna's father, SW2 Ronald Ginther, a Seabee from NMCB 14, was killed in Iraq.

Before Ronald Ginther left for Iraq, Alayna and her best friend, Jenna Worbington, 9, had trouble convincing neighborhood boys to let them play in their treehouses, said Donna Ginther, Alayna's mother. One day, Alayna came home mad, saying she wanted a treehouse of her own.

"So (Ginther) said, 'When I get back from Iraq, I'm going to build you a treehouse,' " said Donna Ginther. But her husband never came home.

One day after learning of Ginther's death, volunteers from The Home Depot came to the Ginther home to see what kind of work needed to be done. While they were there, Alayna mentioned how much she wanted a treehouse.

"She said, 'When my daddy comes home, he's going to build me a treehouse,'" said Tony Fusco, a Home Depot volunteer who helped organize the project.

So members of "Team Depot" decided to make it happen.

In addition to the treehouse, the volunteers performed maintenance, yard work and repairs needed around the Ginther home. It's a service the company has provided for

six other families throughout the Tampa Bay area, said Fusco.

Until that day in June, Team Depot had only helped families whose fathers, sons and brothers were returning from Iraq alive.

"We sort of broke new ground in our project today," Fusco said.

The treehouse stands in Alayna's backyard, made of splinter-free fresh wood. Shaded by a tree, it has steep stairs and an American flag flying from one of its wooden supports.

Alayna would like to paint it green and maybe do something to keep the rain out. Maybe she'll add some furniture and a door. Eventually, she and her friends will color, play school and make believe they are whatever they want to be.

But first, Alayna said, she'll hang a picture of her dad.

For the most part, Alayna understands that no matter how much she misses her dad, she won't be able to wish him home again. But sometimes she forgets, Donna Ginther said.

Sometimes, she still says things like, "When my daddy comes home," or "I'm going to tell my daddy."

She talks to him, sometimes, when no one is around, to hear whether he will respond.

"She'll say, 'I talked to Daddy,' " Donna Ginther said. "He's always giving her a kiss."

Sometimes, said Alayna's friend Jenna, Alayna will dress up in her father's clothes and pretend she is a soldier.

And now, sitting in the treehouse he promised her, Alayna will remember a daddy who died helping a country she has never seen, for people she never knew, for reasons she's too young to completely understand.

And she'll make her father happy, said Donna Ginther.

"I know he is looking down, I think he is ecstatic," she said. "I think she will. I think she'll think about him."

Alayna (above, center) salutes an American flag, raised in honor of her father Ronald, during a "treehouse dedication" ceremony in her front yard. Alayna and her friends (left) descend from the treehouse built by volunteers to fulfill her father's promise.

Transfer of authority changes Seabee role in Iraqi contracts

STORY BY PATRICK PETERSON
Biloxi Sun Herald

Builder 3rd Class Carlos Hernandez of NMCB 74 supervises an Iraqi worker as the worker cuts wood for the Fallujah Liaison Team located outside of Fallujah, Iraq. The Seabees are teaching local Iraqis how to build so that they may use the skills to help rebuild their community.

U.S. MARINE CORPS PHOTO BY CPL CHRISTOPHER M.

CAMP FALLUJAH, Iraq — With the handover of authority here, Iraqis will take over the Seabees' job of awarding contracts, funded by Iraqi oil money, to rebuild the province northwest of Baghdad.

In awarding $100 million in contracts during the past two months, Seabees have demonstrated American contracting methods, selecting experienced Iraqi builders who gave the lowest bids. Seabees now will stand ready to assist the Iraqis in administering funds from the country's oil revenues.

"It remains to be seen whether they will use our process or start a new process," said Rear Adm. Charles R. Kubic, commander of the First Naval Construction Division (1NCD).

Seabee engineers have issued 160 contracts with Iraqi companies, with one as large as $4 million. Competitive bidding was a new process to the Iraqis.

"Some of them were used to a system where they would be handed money for contracts, not having to bid," Kubic said.

Seabees received only a only a few bids for the first few jobs they advertised. The number of bidders, however, increased until a recent road project received more than 104 bids.

"We began to learn of the tremendous capability here," Kubic said. "And it didn't take them long to understand how capitalism works."

Tensions in Fallujah escalated with the March 31 killing of four U.S. contractors and the cordoning off of the city by U.S. Marines.

The fighting delayed the Seabees' plans to begin contracting with Iraqis, but Kubic remained optimistic they could complete that mission before the recent handover of power.

"In less than 100 days, we put together from scratch about $100 million worth of work. The success of the design and contracting effort has been phenomenal," said Kubic, who added that some contracts were abandoned when Iraqis were threatened by insurgents.

"In some cases, the contractors who worked with us had to be very courageous. In some cases they've had to pull back and weren't able to work with us," Kubic said.

"There's a tremendous desire of the Iraqi professionals to get on with rebuilding their nation. They very much want to be apolitical. It's difficult for them to talk about the past. They've all suffered."

Fallujah has no central authority, but the political situation seems to be improving.

"They're beginning to see the mayor himself have a little more influence and be able to control his city," said Kubic, who noted the city's long history of unrest.

"They haven't just been at odds with us," he said. "They've been at odds with each other."

Of the 160 projects, Kubic believes the 16 schools, border patrol stations, sewage treatment plants and water purification plants will be the most important in winning citizens' support.

"That's going to touch everybody," Kubic said. "Saddam never put sewers in Fallujah."

Kubic also believes the construction apprenticeship program, off to a slow start due to the fighting, has the potential to create bonds between Iraqis and U.S. citizens. Young Iraqi workers have been invited to work with Seabees while building projects and at sites outside Fallujah.

"This is much harder than you would think for these young folks, because there still is this intimidation factor," Kubic said. "In some cases they find they can't even continue, because their families are intimidated.

"But of anything we're doing, this has the biggest potential for changing the outlook of the average Iraqi towards the average American."

Seabees perform similar humanitarian missions around the world.

"Every time we move, every time we go to a site (in Iraq), we really have to live our 'We build. We fight,' motto," Kubic said. "I think they're setting a new high watermark for Seabee performance under fire."

Philippine President Medals UCT 2 XO

Balikatan '04 Sailors helped save hundreds in tragic ferry spill

STORY AND PHOTOGRAPH BY
STAFF SGT. NATHAN L. HANKS, JR

HQ PHILIPPINE NAVY, Manila — U.S. Navy LT Gregory Chad Miller, executive officer of Underwater Construction Team Two homeported at Naval Base Ventura County in Port Hueneme, Calif., was awarded the Philippine Military Merit Medal by Philippine President Gloria Macapagal-Arroyo during a ceremony held here March 8.

Miller, a native of Starkville, Miss., received the medal for his unit's support during rescue operations of personnel and crew of Superferry 14.

The ferry was traveling from Manila to Baculod in the central Philippines when it unexpectedly caught fire Feb. 27.

"In the early morning hours ... Air Detachment Bravo of UCT 2 was approached by Philippine Marine Maj. Antonio Rosario, Force Reconnaissance, asking for assistance in the rescue of passengers of the Superferry 14," Miller said. "We offered the use of two Zodiac rubber boats and outbound motors and prepared the two craft for launch."

The team had been conducting bilateral diver training during *Exercise Balikatan 2004* at Marine Base Ternate, Cavite, with Philippine Force Reconnaissance Marines and Naval Special Warfare Group Saliors when they received the request.

"It is an honor to receive this award and it's completely unexpected. However, I only accept this award on behalf of the Sailors of UCT 2," Miller said. "UCT 2 is glad to have been in a position to provide assistance to our Philippine allies during the tragedy."

Miller and 61 Philippine Sailors and Marines were awarded medals for their contributions in the rescue operations. Their selfless acts saved the lives of 420 passengers and crew members of the vessel. The medals were awarded during the blessing and commissioning of BRP General Mariano Alverez (PS38), the Philippines Navy's newly acquired Cyclone Class vessel. The vessel was offered to the Philippines through the federal Excess Defense Articles Program.

Exercise Balikatan 2004 was only one of a number of on-going activities under the framework of RP-US military security cooperation.

Other elements include assistance with comprehensive defense reform: security assistance modules for counter terrorism training, helicopter night capability training, intelligence fusion; subject matter expert exchanges; international military education and training programs advice and support for logistics, engineering, equipment, maintenance and civil military operations.

Across the Nation in April, Quick-Thinking Reserve Seabees Save Lives in Separate Incidents

During a drill weekend April 3, Engineman 1st Class Loern Susor, attached to PHIBCB 1 Det 316, and Equipment Operator 3rd Class Douglass Myer of NMCB 25 Det 1525, responded to a near-drowning of an eight-year-old boy.

Susor and Myer performed several minutes of CPR until the child was revived and they were relieved by an ambulance crew. The child was taken to a local hospital and the next morning was reported doing well.

For their quick and decisive action, Susor and Myer were awarded the Navy and Marine Corps Achievement Medal by the Commander of the Navy/Marine Corps Reserve Center, Green Bay, Wis.

Twenty-six Reservists from Naval Reserve Center (NRC) Baltimore, including Seabees from Naval Mobile Construction Battalion (NMCB) 23 Detachment 0323, received awards during a ceremony April 17 for rescuing passengers of the Lady D, a Baltimore Harbor water taxi that capsized during a storm March 6.

Within minutes of the accident, the Reservists were in the NRC's small landing craft and on the scene. According to Chief Storekeeper Ricardo Duncan, administrative department head for Fleet and Industrial Supply Center Norfolk, Det. 106. Once the Reservists reached the overturned water taxi, they began throwing life rings to the survivors. Twenty-one people were rescued from the vessel.

Six Reservists who jumped into the water received the Navy and Marine Corps Medal for their heroism. Other medals included the Meritorious Service Medal, Navy Commendation Medal and Navy Achievement Medal.

Maryland's Senator Barbara Mikulski and Congressman Dutch Ruppersberger congratulated the Reservists during the ceremony for their heroism.

"It was amazing what they did that day," said Mikulski. "You can have the best training in the world. But the ultimate test in life is character. These people have the right stuff."

The Reservists said they were grateful for the awards, but they didn't feel like heroes.

"What we did was good and I was proud to be there," said Builder 1st Class Pat Elwood, from NMCB 23 Det 0323. "If all those people on that boat had been in the front of the building, another crew would have done the same thing."

Seabees Mount Up and Head North

STORY AND PHOTOGRAPHS BY JO1(AW) STAN TRAVIOLI

THE HOT SUN BEAT DOWN on troops scurrying to leave. These Seabees were among the first to go in and they triple-checked everything. Windows were washed, guns cleaned and the loads checked yet again. Every vehicle was bristling with guns.

Naval Mobile Construction Battalion (NMCB) 74 was headed back into Iraq.

This time they were going to do repair work supporting the First Marine Division in the mission of keeping the peace. The weather doesn't change much, but the dangers are different than during the early stages of the war.

"Hopefully, everything goes smoothly and nothing happens," said Construction Mechanic 3rd Class Craig Sultana. This would be his second trip to Iraq.

"I'm not nervous. It's another day, another dollar, and if anything happens, it happens. But, I have a gut feeling everything will go all right," Sultana said.

The battalion made numerous changes to harden vehicles against attacks. They also harden the troops, with training, body armor and combat tactics. Weeks prior to arrival, and since they arrived, time as been spent practicing.

The training covered many of the tactics the terrorists are using, as well as how to repel them. Hours are spent driving, with training simulators planted on training routes to simulate improvised explosive devices (IEDs). The time spent in practice has paid off in combat, as these Bees are confident and have better idea of what is ahead of them.

"I'm a little nervous," admitted Builder 3rd Class Brandy Maines, but she feels better because the battalion has trained so hard to cover the contingencies.

And because she sits at the helm of a gigantic Seabee cargo vehicle.

Maines pilots the Medium Tactical Vehicle Replacement—the famous

Key West CPOA Sends Boxes of 'Hugs' to Iraq

CAMP FALLUJAH, Iraq — Seabees here received "care packages" May 27 from a group of supporters in Florida. The senders don't know the recipients, but wanted to express their appreciation for the efforts of troops deployed to Iraq.

The Chief Petty Officers' Association of Key West, Fla., coordinated the care packages, with donations from Key West's Morale, Welfare and Recreation fund, the Navy Exchange, base Commissary and several retired service members in the local area. Donations included snack foods, toiletries, games, letters, cards and handmade "hugs" from children at the base Child Development Center. The donations were securely packed into seven large boxes.

Chief Hospital Corpsman (SW) David Calderon helped coordinate the shipment. He explained that the packages had a definite positive impact on morale, saying, "During this deployment, our troops have endured personal hardship, some small in comparison to others. We've also had a few make the ultimate sacrifice. So when friends, family, and in this case strangers, take the time to show their appreciation and support for what we do, it has an obvious effect on the troops."

— JOC Siegfried Bruner

MTVR [*See cover story in this issue. —Ed.*].

The MTVR is a towering cargo vehicle with numerous combat features, including on-the-fly tire inflation and a weapons mount in the turret atop the cab.

"I feel comfortable being in this," Maines said of her truck. It helps that on top of the vehicle is a powerful M240B machine gun, the very reliable replacement for the familiar M-60.

Everywhere on the convoy weapons stick out to counter all threats. Now the Seabees must only focus on the road ahead. For some, it can be tough to keep their mind focused. They have days of travel ahead of them and there are thoughts of what they'll face in the coming months.

Once they arrived, the Desert Bees had a number of construction projects scheduled. This first trip up would be only the first of many more convoys to come.

Cleaning Up
FALLUJAH

STORY AND PHOTOGRAPH BY PH2(SCW/FMF) ERIC POWELL

Helping Iraqis live better lives, one bulldozer at a time

A principal goal of Naval Mobile Construction Battalion (NMCB) 74 in Iraq is to help the Iraqi people improve their country.

This goal has not been easy to achieve, as insurgents in Iraq have aimed to create chaos here and shake the confidence of the Iraqi people.

The Seabees are restoring that confidence one project at a time.

One such project was to help Iraqis clean up areas damaged by battle outside of Fallujah. Evidence of past confrontations was scattered throughout the countryside and across many highways. Empty shell casings, bits of broken pavement and mangled guardrails line the roads.

"Basically, we divided the area into four quadrants and concentrated on one quadrant at a time. We had to gather up all the guardrails into one central location and bury them about eight feet deep," said Senior Chief Equipment Operator Chris Redding.

Although the area around Fallujah has been relatively calm, it is still considered dangerous. "Working in an environment like this is very strenuous, physically and mentally. Improvised explosive devices are always a big concern," Redding said.

Despite the concerns, these Seabees had a mission to complete.

"When I first arrived at the project site, hundreds of meters of guardrails covered the sand. It looked like what it was—a war zone. Two days of us cleaning and flattening out the terrain made a huge difference on the appearance of that area. We will not leave their country in ruins," said Equipment Operator Constructionman Brandon Garske, a member of the cleanup team.

Seabees continue to work for and with Iraqis to restore of their country and help pave the way for a new Iraq.

Required Desert Gear?

CHILDREN'S BOOKS

STORY BY CHAPLAIN (LT) MARC MASSIE, CHC, USNR, JO1 PHILIP ACHTEN & BU2 JEROME KIRKLAND

CM2 Charles T. Nichols gets some of his 15 minutes of fame by appearing on TV for the NMCB 3 United Through Reading program.

When Naval Mobile Construction Battalion (NMCB) 74 prepared for its deployment to *OIF II*, the troops packed the usual Seabee military gear: construction equipment, weapons, desert gear, and so on. But there were some things that most people wouldn't expect to see a Seabee battalion carry on deployment—including 600 blank videotapes, video cameras and big cases full of children's books.

The unusual equipment is for a program called Uniting Through Reading (UTR). This is a terrific quality-of-life program that allows deployed service members to read books to their children while being videotaped. The battalion supplies the videotapes, the service member records the tape and then mails it home, keeping open essential lines of family communication in a unique way. The recipients have included children, grandchildren, nieces, nephews, brothers, sisters and even a Sunday School class.

On their last deployment, NMCB 74 spent time in Guam, Kuwait and Iraq, and produced well over 200 tapes. Every time the Bees moved to a new location in the desert, the box of children's books was packed and moved with them. Even in some of the most remote areas of the desert, Seabees plugged cameras into generators and read to their children.

NMCB 74 was one of the first Seabee battalions to implement UTR, now a fixture across the Naval Construction Force.

In addition to the battalion fly-away kits, permanent libraries and taping equipment are placed at permanent Seabee deployment sites in Guam, Rota Spain and Okinawa, Japan.

Using lessons learned from the last deployment, NMCB 74 this trip brought more cameras, TV/VCRs, blank videotapes and extra books donated from supporters. The Bees are running the program today at sites in Iraq, Spain, Croatia and Ghana and sites are producing numerous tapes each week.

The benefits of this program have been tremendous for those on both sides of the camera. For the children, the program encourages reading and helps improve their literacy skills. It also helps to reduce the anxiety children feel while separated from their parents. They have the opportunity to see the parent's face, hear that familiar voice and interact through reading.

For infants and toddlers, UTR seems to help the child remember their deployed parent's voice and face. When the service member returns home, the infant often recognizes the returning parent immediately.

For deployed service members, the benefit becomes apparent after they make a tape and you see the smiles on their faces. Although the Seabee and the family members may be separated by thousands of miles, absent parents still have the chance to be a part of family's life by reading and speaking to their loved ones.

If you ask a deployed Seabee if he's read a good book lately, his or her answer may be "The Cat in the Hat," "If You Give a Pig a Pancake" or "The Rainbow Fish."

LT Ken Amador, chaplain with NMCB 3, and Religious Program Specialist 1st Class Enrico Antonio enthusiastically embraced the program from the beginning. Antonio thinks the extra baggage (video equipment, monitor and hundreds of VHS tapes) was well worth the effort to pack it to the desert.

"The reading program is one of the best programs of its kind in the Navy. You may talk to your family through the phone for hours, but they can't see your expressions. There's more of a connection when children can see their parents face," Antonio said.

Utilities Constructionman Esteban Echevarria was one of the first Seabees to sit for the NMCB 3 camera. He says the program is money well spent.

"This program really benefits our family members, who are alone and missing us. It is a great way to stay connected," Echevarria admitted.

LT Tom Risse, a mobilized Reservist from Sumner, Iowa agrees. He sees it as great way of dealing with the stress and confusion children feel when their parents are away for an extended time.

"I like this program and I believe it will really help my kids," Risse said. He has already mailed videotapes home to Iowa and plans to send one each month for as long as he is deployed.

Helping children adjust to the absence of a parent is a big part of what the UTR program is about. Some Seabees have even requested favorite books from home to read so their children can follow along with a familiar story. But not everyone reads a story to children. Seabees are allowed to tape video messages to their families as well.

Builder 3rd Class Michelle Gaul thinks that's a great idea.

"Now, my family and friends can see how I'm doing adjusting to a whole new area," Gaul said.

U.S. NAVY PHOTOGRAPH BY BU2 JEROME KIRKLAND

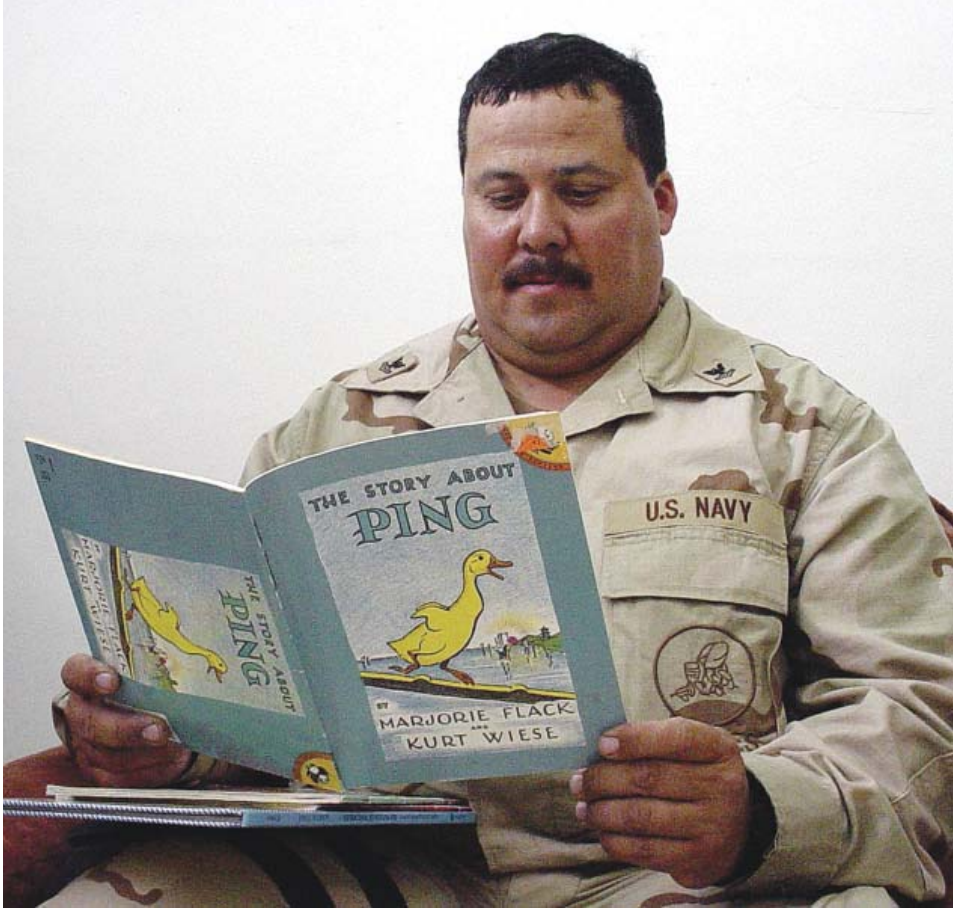

GM2 Phillip Swann reads a book into a video camera, a performance taped and sent home to his children in Spartanburg, S.C. Swann is a member of NMCB 14 deployed to Iraq.

The process is simple. The video camera and monitor are set facing a chair with an American flag providing the backdrop. Children's books such as "Kat Kong," "Raising Dragons," "The Real Tooth Fairy" and more are available for those who choose to read a story.

Taping takes place whenever the Seabees can find a break in their schedules for thirty minutes to read a book or deliver their message. Everything except the postage is free. The Navy pays for the tapes and volunteer groups have donated the books.

In the first two weeks of UTR at NMCB 3, more than 30 Seabees embraced the opportunity to stay connected by making videotapes. Many of those plan on making additional tapes in the months ahead and names continue to fill the pages of the sign-up sheet.

If the measure of success of the UTR Program can be gauged by anything, it might be by the reaction of the families at home. Chief Builder Allen Pettitt says he'll do more tapes after hearing how his grandchildren reacted to his story telling video.

When his wife, Jennifer played the video for the first time, two-and-a-half-year-old Kailyn, his granddaughter, ran to the screen to try and kiss him. Jennifer, who watches three of Pettitt's six grandchildren now says they insist she play the tape at least three times a day.

"This program has made a big, big difference," Pettitt said. "My wife says I just need to remember to look into the camera and mention every grandchild's name."

According to NMCB 14 Religious Programs Specialist 3rd Class Santa (Rita) Ortiz, from Bishop, Texas, who oversees the battalion's program, attendance at her location runs hot and cold.

"Some days we have people lined up waiting. Other days, only one or two will show up," said Ortiz, "We prefer to have people schedule an appointment if possible so that they do not have to wait, but we understand that with changing schedules this can be difficult. We don't send people away if they don't have an appointment, but they may have to wait if the schedule is full."

Making a difference is what the UTR Program does best. Somehow, the distance to home seems a little less, the connection a little stronger when a Seabee is reading a story to a child or looking into the camera saying "I miss you" or "I'll be home soon."

Until that day, the Seabees of Task Force Sierra and elsewhere will continue to brush off the dust, straighten their sweat-stained uniforms and smile into the camera.

U.S. NAVY PHOTO BY PH1 ALAN D. MONYELLE

Quality of Life Upgrades at Al Basrah

BU2 Del Jewett cuts a piece of wood that will be used to make bunk beds for security forces at the Al Basrah Oil Terminal. U.S. Navy Seabees from Naval Support Activity Bahrain are making improvements for the living conditions of the Interim Marine Corps Security Force company from Bahrain, and Iraqi Security Forces that provide vital protection. Since July 2003, Al Basrah and Khawr Al Amaya oil terminals have pumped more than 385 million barrels of oil to more than 235 tankers, resulting in more than $10 billion in revenue for the Iraqi people.

U.S. NAVY PHOTO BY ENS TONY

Been There. Done That. Got the Hat.

Construction Mechanic 1st Class Peter Reid displays his boonie hat inside out, where he has inscribed the names of the cities he has visited in Iraq and the number of convoy security missions he has been on. Reid is a Seabee with Naval Mobile Construction Battalion 14, a Reserve Seabee battalion that is in Iraq supporting *Operation Iraqi Freedom II*.

SEABEE Magazine Chosen Best in the Navy

Annual Chief of Information Merit Awards Also Recognize Contributors

1ST PLACE, CHINFO MERIT AWARDS; 1ST PLACE, THOMAS JEFFERSON AWARDS

WASHINGTON NAVY YARD, D.C. — In a Navy message, *SEABEE* magazine, the official publication of the U.S. Navy Seabees, was named the best magazine-format publication in the Navy by the prestigious 2003 Chief of Information (CHINFO) Merit Awards.

The magazine is published by the Naval Facilities Engineering Command (NAVFAC) public affairs office.

"It's great for this magazine to be recognized for its outstanding efforts in highlighting the important role of U.S Navy Seabees around the world," said CAPT Paul Kuzio, chief of staff at the First Naval Construction Division, Norfolk, Va. "The magazine is absolutely first-class, and all of the writers and photographers from the various battalions and units who contribute to it can be justifiably proud of their efforts."

The story "We're Not In Kansas Anymore," written by reporter Andrew G. Wright while embedded with Seabees in the early days of *Operation Iraqi Freedom*, was selected for First Place in the category for contributions by a non-staff stringer.

This entry went forward to represent the Navy in its category at the prestigious DoD-wide Thomas Jefferson Awards, where it also won First Place in the fiercely competitive all-service competition.

Photographs that appeared first in *SEABEE* magazine scored important individual CHINFO awards.

Then-Photographer's Mate Airman Lamel J. Hinton, from Naval Mobile Construction Battalion 40, took Second Place in the Stand-Alone Photograph category for "Seabee Engineer Reconnaissance Team."

Photographer's Mate 1st Class (SW) Arlo K. Abrahamson, from Fleet Combat Camera Group Pacific, scored a Third Place for his image of a surfacing Seabee diver titled "Aqua, Man."

"The CHINFO Merit Award recognizes the Seabees' extraordinary contributions," said Harrel T. Richardson, Force Master Chief Petty Officer of the Seabees, "and it recognizes the literally amazing journalists, photographers and public affairs officers who provide the magazine's content."

NAVFAC's trade journal for the Navy's Civil Engineer Corps, *NCE: Navy Civil Engineer*, was awarded a CHINFO Honorable Mention.

"Congratulations to all Commands and individuals for your outstanding efforts in covering the Navy story. Well done!" said Rear Adm. T. L. McCreary, Chief of Information in the announcement message.

In separate but related news, one of the magazine's contributors has also been recognized for excellence by Commander, Naval Reserve Force. Chief Journalist Kevin Elliott, USNR, who provided images for our SERT package last issue as well as in this one, was selected as the 2003 Naval Reserve Photographer of the Year.

2ND PLACE (LEFT) AND 3RD PLACE, STAND-ALONE PHOTOGRAPH, CHINFO MERIT AWARDS

U.S. NAVY PHOTO BY JO1 JESS JOHNSON

Three for One in OIF

On April 16, 2004, Naval Mobile Construction Battalion (NMCB) 3, homeported in Port Hueneme, Calif., officially relieved NMCB 1, homeported in Gulfport, Miss. NMCB 3's detachment in Iraq is just part of the hundreds of Seabees that form the structure of Task Force Sierra (TFS), commanded by NMCB 3's CDR Kenneth Branch.

TFS is performing general military construction throughout Southwest Asia in support of *Operation Iraqi Freedom.*

With the exception of the brief ceremony, the transition was hardly noticeable as advance party members of NMCB 3 hit the ground running, working side-by-side with their NMCB 1 shipmates. It was very noticeable by two Seabees, however.

In a reunion, Engineering Aide Constructionman Joseph Rualo of NMCB 3 arrived just in time to say goodbye to his twin brother Christopher, a Builder 3rd Class with NMCB 1. The brothers, who have seen each other infrequently during their time in the Navy, were surprised and happy. "We didn't expect to see each other again until Christmas, so this was really great," Joe Rualo said.

—JO1 Philip Achten

The brothers Rualo

'Roos Bound for Pacific and Iraq Deployment Sites

The Kangroos of Naval Mobile Construction Battalion (NMCB) 133 answered their own call to "bring it on" when they deployed to Asia in May.

While the main body of the battalion deployed to Camp Shields in Okinawa, Japan, the battalion has sent other essential details across the Pacific.

Details are deployed across the planet, from Iraq to San Clemente Island, Calif.; Pohang and Chinhae, Korea to Diego Garcia; as well as to Atsugi, Fuji, Iwakuni and Sasebo, Japan.

NMCB 133's Commanding Officer, CDR Jeff Borowy, said the battalion looked forward to taking over the work already begun by NMCB 5 on Okinawa.

"NMCB 5 has really done a lot to make Camp Shields a better place. They have improved the appearance, maintained accountability of its equipment and material, and significantly improved the condition of the Civil Engineer Support Equipment (CESE). This turnover has been phenomenal. Across the board, our staff has had nothing but praise for their NMCB 5 counterparts," Borowy remarked. "I am extremely proud of our advance parties. They had a challenging flight and hit the ground running, whether it was here in Okinawa or at one of our seven det sites."

During the turnover, the two battalions exchanged responsibilities for more than 300 pieces of CESE, with only one piece that was broken down, or as the Seabees call it, "on deadline."

"When we got here, there were about 40 pieces on deadline," said CDR Richard Cook, NMCB 5's commanding officer. "I'd say we made a little improvement."

— JO2 Landon Mason

In Iraq, you miss the little things the most

Story by PATRICK PETERSON
Biloxi Sun Herald

CAMP FALLUJAH, Iraq — Separated from their routines and familiar surroundings, U.S. troops in Iraq discover an emptiness once filled by old habits.

"I miss family night at the Sonic," said Construction Mechanic 1st Class Mike Davis of Orange Grove. On family night, which is Tuesday, burgers are half price. Davis and his wife have a tradition of spending that low-key and economical evening together. "It always gives you time with your wife," he said. "It sounds so simple, but it's relaxing."

Letters and e-mails from home often remind Seabees of what they like best and took for granted before deployment. From a photo of a friend showing off a large fish, one Seabee officer got a new appreciation for his home and discovered something he is missing in the dusty desert.

"I forgot how green Maryland is," said LCDR Gary Whipple, a Seabee contracting engineer. The greenest thing he's seen in Fallujah is a Humvee. "I miss my dog," added the owner of a golden retriever. "Obviously, I miss my family. But I kind of miss having a dog around," he said, realizing the dog meant more to him than he knew. "The dog probably thinks I'm dead and gone," said Whipple.

Steelworker 2nd Class Michele Wheeler, 31, of Chattanooga, Tenn., said she misses films. "I miss going to the movies with my girls," Wheeler said, who might be one of the few adults with children who have not seen *Shrek II*. "I'll bet that's funny," she said, while building a fence at the U.S. outpost near Fallujah.

Everyone misses their vehicles. Most Seabees and Marines are usually passengers in bumpy military vehicles, which have no air-conditioning. Drivers must pay attention so carefully that it takes the joy out of driving.

"I miss riding my motorcycle," said Equipment Operator 3rd Class Ezekiel Reid, 22, of Louisville, Ky. He owns a speedy Honda Night Hawk and loves to zip along the waterfront in South Mississippi. "U.S. 90's pretty fun, especially at night," he said. "I just enjoy feeling the freedom. It's almost like flying."

There's no shortage of entertainment. Marines and Seabees in Camp Fallujah have CDs, DVDs, video games, movies, books and even a basketball court.

But "we need a pool table," said Equipment Operator Constructionman William Keadle, 21, a Seabee from Gaston, S.C.

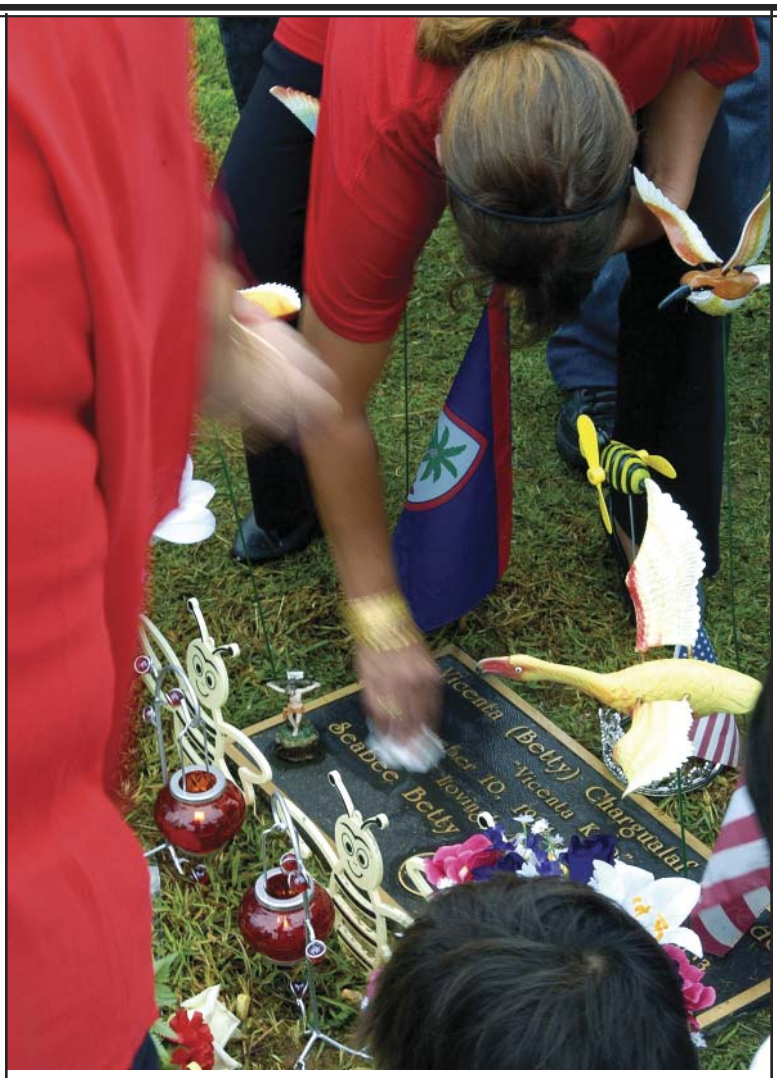

THE LEGACY OF THE WOMAN KNOWN AS

SEABEE BETTY

For 50 years, Vincenta Chargualaf Peredo was the 'Seabee Grandmother' on Guam. On the first anniversary of her passing, her family and her Seabees gathered to place a new headstone and to relive the hospitality and unbridled love of a lifetime.

STORY AND PHOTOGRAPHS BY JOURNALIST 1ST CLASS JESS JOHNSON

At the funeral of a family member or loved one, somber reflection of a life well lived, shared among friends and family, is a large part of the healing process. But when the person's life has touched the lives of thousands over the course of 50 years, there is often a desire to celebrate the departed's accomplishments again and again.

With "Seabee Betty"—whose actual family name was Vincenta Chargualaf Peredo—the need to revisit the accomplishments of her life could continue for the next 50 years and still not give everyone whose life she touched an opportunity to pay their respects. This year, on the first anniversary of her passing, Seabee Betty's family gave the military units serving in Guam a chance to celebrate her generous nature and share some stories about her many parties and acts of kindness.

In June, Seabee Betty's family and military military observed a weeklong vigil at church ceremonies each evening in the house of worship Betty attended all her life. Members of several Guam tenent commands attended, including personnel from Commander Naval Base Marianas, Public Works Center Guam, Resident Officer in Charge of Construction and Seabees from Naval Mobile Construction Battalion 3.

Her life's work was to bring a bit of home to the military serving in Guam, because she knew how hard they worked to improve the conditions on Guam after World War II. After the Japanese occupation, she wanted to advocate "freedom and family unity among all people."

"I love the military," she said. "However, the *USS San Jose* and my Seabees, they will always be special to me."

Just as she had a special place in her heart for the Seabees, they in turn held her in high regard. Many times Seabee Betty would be invited to military ceremonies as a special guest of the command.

Personal attention was something everyone remembered about Betty. The care she took sharing her extended family, her heritage and the history of her island home have been etched into the hearts and minds of everyone who knew her. For her tireless efforts and steadfast devotion to the military, Betty was given a significant place of honor for her final repose. In a nondescript grave in the Guam Veteran's Cemetery, she was allowed to be interred alongside the men and women she worked so hard to take care of while they were in Guam.

This quiet resting place, however, had been left without a permanent grave marker for nearly a year. When the Civil Engineer Corps officers of the Naval Facilities Engineering Command learned of this oversight, they quickly swung into action. Soliciting private donations, they worked with the Peredo family to have a bronze plate created to honor her final resting place.

The Governor of Guam, Carl T.C. Gutierrez, declared June 20, 2004, to be "Seabee Betty Day" in recognition of all the great works and accomplishments she had done in her lifetime. With her family and her Seabees again, the marker was respectfully put into place.

The marker will stand the test of time, just as Seabee Betty's legacy will always bring smiles to the faces of men and women who served on Guam under her watchful care.

Train
Like You Fight

This Seabee regiment executed a realistic engineering exercise at Fort Magsaysay, the Philippines, using lessons from OIF.

STORY AND PHOTOGRAPH BY CDR MEG REED

U.S. Navy and Philippine Navy Seabees prepare to lay down lime to help stabilize a runway at Fort Magsaysay, in the northern province of Nueva Ecija.

Flashback to March 2003: Navy Civil Engineer Corps officers provided direction from a Command Operations Center in Kuwait to Seabee task forces on the *Operation Iraqi Freedom* battlefield making their way with U.S. Marines moving into Iraq. Fast forward to March 2004: Engineers and Seabees from the 9th Naval Construction Regiment (NCR) conducted a mock ops center exercise on a Philippine military base employing realistic training based on lessons learned during *OIF*.

The 9th NCR, a reserve regiment headquartered in Fort Worth, Texas, brought battalion commanding officers, operations officers, command master chiefs and more, since the potential for Reserve Seabee mobilization is a reality in meeting today's force requirements and contingencies.

The *Kedge Hammer* ops center was a hive of activity.

"Combined/joint operations" is the thesis for many military exercises in the modern world, and this one was no exception. This drill, a command post exercise (CPX) called *Kedge Hammer*, was a part of the greater *Exercise Balikatan 2004*, the annual U.S.-Republic of the Philippines combined exercise and featured participants from the Philippine Navy Seabees and the Philippine Army 51st Engineer Brigade. U.S. Navy engineers shared key exercise roles with Filipino counterparts.

Members of the 30th NCR/First Naval Construction Division Forward, many of whom were actually on the battlefield in Iraq in 2003, led the exercise control group.

Kedge Hammer tailored *OIF* concepts and lessons learned to fit realistic scenarios that could happen in the Philippines. The focus of the CPX was to provide training in command, control and communications, combat operations center standard operating procedures, staff planning and convoy operations.

Scenarios include building a forward-area replenishment point, assessing a site for possible bridge construction, drilling a water well, constructing a base camp and conducting humanitarian assistance projects against a backdrop of hostile conditions tailored to the local geographical and political environment.

Helping sustain the realism of the training was a war-gaming simulation team from Titan Systems of San Diego, Calif. Titan trained Seabees with the Marine Air Ground Task Force Tactical Warfare Simulation (MTWAS) model. MTWAS provides a common operating picture similar to what would be seen on a battlefield.

According to Jim Hayes, one of the Titan contractors, the system helps engineers direct Seabee movement and considers factors that affect capabilities. The scenarios include logical processes to accomplish the engineering objective as well as other supporting tasks. For Seabee regiments that could be mobilized to a fight, this important training helped them understand how they fit into the overall battle rhythm.

The *Kedge Hammer* ops center saw a high operating tempo and numerous people crammed into a SEAhut, the traditional Seabee-constructed cabin structure.

Participants carried out their assignments contained by a perimeter of plotting boards, the watch officer's tasking desk and tables that held vital equipment for communicating with higher headquarters and subordinates.

Adding to the scene was the MTWAS-projected computer image of the battlefield and several analyst positions that were continually swept by a large fan trying to keep things as cool as possible in the heat of the Philippine summer.

LCDR Dave Marasco, one of the *Kedge Hammer* watch officers, provided information about simulated enemy activity for the intelligence and operations sections, which used it to plot activities and notify subordinate units in the field. A special response cell operated from a nearby tent to play the parts of the various units and positions affected by the scenario.

This type of training was more realistic for the Seabees and engineers on the scene, since it involved deploying out of country and included essential embark training, learning how to work with another nation's military and understanding the different engineer languages in the Seabee-Marine relationship.

LCDR Donna Forbes, the operations officer for Naval Mobile Construction Battalion (NMCB) 22, was enthusiastic about the training and eager to take back what she learned to the personnel in her battalion.

"The training has been great, and relevant. In addition to learning the Marines' process for staff planning, the command post exercise demonstrated the importance of communication between the battalion and regiment."

USMC Major Sal Viscuso of the *Kedge Hammer* exercise control group debriefs the 9NCR commander and staff about their exercise performance.

On March 16, 1944, Joe Martinez enlisted in the U.S. Navy as a Seabee. On Christmas Day, 1944, he was blown up. The rest is history.

A Seabee gets his Purple Heart

On March 16, 1944, Joe Martinez enlisted in the U.S. Navy, taking off shortly thereafter for boot camp in Bainbridge, Md.

Once he completed that wartime gauntlet, he reported to the famous former Naval Construction Training Center at Davisville, R.I., where he was trained as a Carpenter's Apprentice.

Via a stop at the Construction Battalion Replacement Depot at Camp Parks, Calif., Martinez was assigned for duty to Construction Battalion Maintenance Unit (CBMU) 512 for overseas duty. On Nov. 17, his unit embarked on *M.S. Sommelsdijk*, a fairly new, 9,227-ton vessel built in 1939, and it headed for the code-named destination of "Island X."

Sommelsdijk was also known as the "Grey Ghost." Crossing the Equator only 10 days later, Martinez was inducted into that fraternity of brothers (and today, sisters) known simply as shellbacks.

The Grey Ghost arrived at Samar Island in the Philippines in December. While anchored in the harbor there, on Dec. 25, 1944, a Japanese attack plane torpedoed it.

Merry Christmas, Seabee.

"At the time, about 1930 hours, CBMU 512 was conducting a meeting in the number two hold," Martinez recalled. "We heard loud noises and shouting on the deck above us, and all of a sudden the deck came crashing down on us."

The torpedo had struck the ship and exploded in hold number one. Steel beams and hatch covers flew around like so much paper, but Martinez survived the blast. "I don't know how I got out," he said, "since I was only semi-conscious most of the time. I only recall being carried out and placed on the main deck."

Later, Martinez spent several days ashore in a medical facility and then returned to his unit. "At our camp in Samar, we were placed on alert in preparation for a possible enemy attack," Martinez said. "To protect ourselves, I was given a carbine and my buddy was given a knife." A *knife*? "We had no other means of defense, as all our equipment was still on the *Sommelsdijk*."

He and his Seabee shipmates spent the rest of their war on Samar Island, building facilities.

"In our free time, we played baseball against an all-star team on a diamond we had built. After the war ended, our unit was broken up, as men were going home," Martinez remembered.

By November of '45, he had been transferred through intermediate units to the Iwo Jima Staging Area, and on Dec. 21—almost exactly one year after the torpedo attack—Martinez boarded an LST for the long voyage to San Francisco.

Arriving with only the dress blue uniform on his back and a baseball glove in his hand, Martinez and others were flown from the West Coast to New York and then on to Lido Beach where, on Feb. 2, 1946, Martinez was honorably discharged from the Navy.

"My discharge papers didn't indicate that I was injured when the *Sommelsdijk* was hit," Martinez said. "For 40 years, I tried to have my records corrected without success."

Then Ted Lekas, a fellow former Seabee from the Navy Seabee Veterans of America (NSVA) Dept. of Florida heard the Martinez story. Lekas sent him a copy of the "Armed Guard" magazine that contained a story about the *Sommelsdijk* and described the attack on the vessel.

That began a chain of events that uncovered the extended *Sommelsdijk* story—including a report written by an officer on the ship that day that mentioned Martinez as being an "ambulatory patient" as a result on the Christmas Day attack in '44. On Nov. 18, 2003, Joe Martinez was notified by the Navy that he would finally receive the long-sought Purple Heart for his injuries in WW II.

The *Sommelsdijk* was scrapped in 1965. On March 13, 2004, nearly 40 years to the very day after Martinez enlisted in the Navy, he attended an award ceremony and dinner in his honor at Gibbs Hall in Fort Monmouth, N.J.

Also in attendance were members of Reserve Naval Mobile Construction Battalion 21 and, from the active duty side, First Naval Construction Division Command Master Chief (SCW) Kevin Timmons.

Rear Adm. George Reider, USNR (Ret.) conducted the pinning ceremony that, after 40 years, recognized yet another Seabee's sacrifice in wartime.

OIF Seabee Awarded Purple Heart

At the National Naval Medical Center April 2, Rear Adm. Michael K. Loose, commander of Naval Facilities Engineering Command (NAVFAC) and the Chief of Civil Engineers, presented one of the first Seabee Purple Heart Medals to Equipment Operator Constructionman Leo "Jerry" Geibel, 21, from Kane, Pa.

Geibel is assigned to Naval Mobile Construction Battalion (NMCB) 74 homeported in Gulfport, Miss. He sustained severe injuries to his legs March 20 when they deflected a rocket-propelled grenade (RPG) in the Ramadi area of Iraq.

"I actually saw the round leave the tube," Geibel said, but his attacker was too close for Geibel to do much. "It skipped off the ground a few times and then it hit me. I just couldn't get out of the way fast enough."

The RPG continued past Geibel and exploded on a wall 60 meters behind him. Two others that followed missed the Seabee squad entirely.

Because the area was too dangerous and crowded for a helicopter extract, the Seabee team rushed him by Humvee back to their base camp and to the medical aid station—where, almost miraculously, Geibel was attended by an orthopedic surgeon who happened to be present.

Stabilized for travel, Geibel was flown to Germany for additional treatment and then to the National Naval Medical Center, where he has had numerous surgeries on his left leg and foot.

Geibel was more than ready to return to his home in suburban Pittsburgh's Highland Township. He was released temporarily April 9 and was home for 30 days. Then it was back to Bethesda for more surgery and physical therapy. His Navy doctors expect full recovery.

"My doctors are awesome," Geibel told his hometown newspaper in describing the team of surgeons that have worked on him since his arrival at the Naval hospital nearly two weeks ago. "They pieced me back together in a week."

Geibel credited his Seabee emergency medical training and physical fitness regime with helping to ensure his survival.

In the midst of his own difficult recovery, Geibel, in classic Seabee fashion, was still thinking about others.

"We had been playing with some of the neighborhood Iraqi children," he said, "and it was just lucky that none of them were hurt."

"Because of their duties, Seabees often are in harm's way," said Force Master Chief Petty Officer of the Seabees (SCW) Harrell T. Richardson, who accompanied Loose in the medal award ceremony.

"Petty Officer Geibel fully demonstrates the '*Can Do!*' attitude of the Seabees is all about."

Sailors Report For Duty Aboard 'The West Wing'

STORY AND PHOTOGRAPH BY JOC D.C. ROSS

Dozens of U.S. Navy members on leave or liberty—and hundreds of allied military and local civilians—descended on historic St. Anne's Church In Annapolis May 10 to play small roles as "extras" in a filming of the popular television program "The West Wing."

The program involves the fictional administration of "President Jed Bartlet," played by acclaimed actor Martin Sheen.

"I'm a fan of the show, so it was a special treat to come out and spend the day with the cast," said Navy Lt. Eileen D'Andrea, a Civil Engineer Corps officer and amphibious programs manager for the NAVFAC Seabee Readiness department.

The scenes filmed at St. Anne's, an Episcopal congregation first established about 1695, involve the formal funeral ceremony for a Navy admiral. While no one on the show was commenting specifically, the only "admiral" regularly seen in this fictional White House was Adm. Percy Fitzwallace, Chairman of the Joint Chiefs of Staff, played by veteran actor John Amos.

LT Eileen D'Andrea talks shop with the president.

In the 2003 TV season, Amos also appeared on the WB Network program, "All About The Andersons."

Among Naval personnel volunteering their off time to be in the show were members of the U.S. Navy Ceremonial Guard, who play a large part in several of the simulated funeral scenes. But for others, some only sitting in the church as "military background mourners," the brush with TV fame was less prominent.

"It was a long day of 'hurry up and wait.' It wasn't much different from a command inspection and change of command ceremony rolled into one long day," said Lt. Cmdr. Gregory Barringer. Seated in the front row of the church during a key shot, Barringer may survive the editing process and be seen in the program.

"The personal interaction with the headline stars made the event worth the effort and the 'extra's cameo' shot was an added bonus," he added. "It was a long eight-hour day for perhaps one or two minutes of usable footage. I am [still] standing by for my close up."

Show officials couldn't say when the funeral episode featuring Naval personnel would air. However, except for ceremonial guards, U.S. Navy participants were instructed to wear Service Dress Blue uniforms, telegraphing that the program will air in the next TV season at a time when the Navy has changed out of summer white uniforms.

According to **www.tvtome.com**, "The West Wing" debuted on the NBC network Sept. 22, 1999. Through the fifth season ending May 19, NBC will have aired 112 shows. The show reportedly will return for a sixth season in the fall beginning with an episode titled "N.S.F. Thurmont."

Naval Support Facility Thurmont is the military designation for the presidential retreat popularly known as Camp David.

A STICK AND A CARAT

With a combination of sophisticated and rudimentary tools, U.S. Navy Seabees and their Philippine Navy counterparts built skills, cooperation and a school addition by working together.

STORY BY LT CHUCK BELL
PHOTOGRAPHY BY LT JOEL D. MCMILLAN

U.S. NAVY SEABEES AND PHILIPPINE NAVY (PN) construction experts learned as much from each other as they did by working on a goodwill project at a local school.

Twenty U.S. Navy Seabees from Naval Mobile Construction Battalion (NMCB) 3 and 17 of their PN counterparts worked together to build a two-classroom expansion at the Pundakit Elementary School in San Antonio, Zambales, the Philippines. The engineering civic action, or ENCAP, project began July 6 and ran through the end of the Philippines phase of exercise Cooperation Afloat Readiness and Training (CARAT) Aug. 4.

CARAT is an annual series of bilateral military exercises with several Southeast Asia nations designed to increase the interoperability of the respective navies while promoting friendships. NMCB 3 is based in Port Hueneme, Calif. The detachment in support of CARAT was re-deployed from its main element deployed to Guam.

According to Perlita Lapiz, the school's principal, the two 18-by-48-ft classrooms being built allowed school officials to move two existing classes into the new rooms, making way for a library that the school doesn't have now. The combined Seabee team also constructed 50 feet of sidewalk and a covered walkway in front of the new classrooms.

"We are very thankful," Lapiz said. "The community is very happy as well about the joint efforts of the Philippine Navy and U.S. Navy."

Seabees from both navies said they realize how the school addition will benefit the 300 first through sixth graders, but they also said that working together has been an eye-opener.

"They're sometimes more resourceful than us," Builder 1st Class Ronald Ford said of the PN Seabees he worked with for three weeks. Platoon commander for the detachment assigned to the CARAT project, Ford said he is impressed with the practical approach of his PN construction mates. "They'll cut a board with a handsaw while we're looking for an extension cord."

"We learned a lot from them," agreed Engineering Aide 3rd Class Jessie Taborda. He explained how he and his fellow Seabees use an electronic transit for taking levels, while the PN Seabees are able to gauge nearly as precise a level in some cases with a piece of clear tubing

EAC(SCW) Jose Ybanez (above) enjoys a unique "food fight" provided by the Philippine Navy Seabees. The food is laid along banana leaves and at a declared time, you begin "fighting" for your food. Below, EO3 Russel Lizotte and EO3 Justin Gagne (foreground) dig out the septic tank.

containing water. The tubing is stretched in the shape of a U from point to point and manipulated until the water indicates the correct level, Taborda explained. "They improvise if they don't have the precise tools."

The learning has been two-way street, according to ENS Renato Bartolome, the PN Seabee detachment officer in charge from his navy's Service Group, Naval Construction Brigade.

"They have their own techniques and we learn from the U.S. Navy," he said. "Some of our equipment is manually operated, so it is nice to use the electric and battery-powered equipment."

like this. "It feels good to come back and share what I have learned," he said.

"This is one of the best opportunities we'll ever get as Seabees to provide something that can be used the day we leave by kids here," said LT Jake McMillan, officer in charge of the NMCB 3 detachment. "We're providing something they wouldn't get for a long time."

The Philippines phase of CARAT, the last of the 2004 exercise series, officially began July 27 with the arrival of a 5-ship CARAT Task Group. Other CARAT phases were conducted this summer in Singapore, Brunei, Thailand and Malaysia.

UT3 Khamla Southaphanh (above, green hardhat) reviews a plumbing plan with a Philippine Navy Seabee for the "comfort rooms" (restrooms). Below, Southaphanh, Fireman 1st Class Gabriel Villanueva, a PN Seabee, mix concrete that will form the base of a new—and much needed—two-classroom addition at the elementary school.

PHOTOGRAPH BY PH2 LAURA HEINKEL

A PN Seabee (above) works a field-engineered soil compactor in a trench. Fireman 1st Class Glen Aguada, middle, a Philippine Navy (PN) Seabee, cuts PVC piping with the assistance of UT2 Joseph McCarthy, right, and Villanueva observes.

PHOTOGRAPH BY PH2 LAURA HEINKEL

Bartolome said it was the first exposure for some of his Seabees to several pieces of the equipment the U.S. Navy Seabees use, such as the sophisticated electronic transit. He said he was also impressed with his U.S. Navy counterparts' emphasis on safety. The American Bees loaned safety equipment, such as ear and eye protection, to the PN Seabees.

The PN Bees also benefited from the project on more personal levels. "I'm proud to help the Philippine youth in this community," Bartolome said.

Taborda, a Philippine native, said the project had special meaning for him. As a child, he attended a school in Vigan, Ilocos Sur, not unlike the one he helped to expand. He said he had been hoping during his three years in the PN Navy to get back to the Philippines in support of a project

The work of two nations' Seabees was in support of an engineering civic action (ENCAP) project as part of the Philippines phase of Exercise Cooperation Afloat Readiness And Training (CARAT). Twenty Seabees from NMCB 3 and 17 Philippine Navy Seabees assigned to Service Group, Naval Construction Brigade, began work on the nearly month-long project on July 6. CARAT is a regularly scheduled series of bilateral military training exercises with several Southeast Asia nations, designed to enhance the interoperability of the respective sea services. Group photograph by Guadalupe "Lupin" Salimo.

Operation New Horizons

Navy Seabees and Air Force builders combine to give some South American school kids a new outlook on education, cooperation—and caring

STORY BY CM3 (SCW) MICHAEL J. KIERNAN
PHOTOGRAPHY BY U.S. AIR FORCE SSGT SARAYUTH PINTHONG

A group of 24 dedicated U.S. Seabees from Naval Mobile Construction Battalion (NMCB) 3 re-deployed from Guam and made their way to Guyana, South America, to take part in the *New Horizons* exercise.

The *New Horizons* mission is to assist developing countries improve their quality of life, while providing valuable training to the military participants. By all accounts, both goals were very well served this year.

When the Bees arrived in Guyana, they hooked up with the U.S. Air Force 820th Rapid Engineer Deployable Heavy Operational Repair Squadron Engineers, or "RED HORSE," the USAF translation of Navy Seabees. Also on the scene were members of U.S. National Guard Colorado and a USAF medical detachment. The combined group, including members of the Guyanese military, formed up as the Joint Task Force (JTF) Command.

After a 26-hour trip from Guam to Georgetown, Guyana, the Seabees and JTF immediately began building base-camp facilities to help make life on the scene a little more comfortable for themselves and the Guyanese military.

USAF Major David Konshok, the JTF commander, observed that "from day one, the Seabees and the RED HORSE have worked together to overcome obstacles in their way. For instance, the first day here, it was raining and I told the troops we couldn't serve breakfast until the mess tent was put up. In a matter of 15 minutes, the tent was up and the Seabees and RED HORSE were laughing and eating breakfast, soaked from the rain that had been falling for more than an hour."

Evidently, an air force major had never before threatened a Seabee's mealtime. "The Seabees continued to build the camp with the RED HORSE. It was amazing how fast and well they work together," Konshok said.

"Working with the RED HORSE is great. They have some pretty good tools, too," said Builder 3rd Class Christian Gardner. "The challenging part is doing something the 'Seabee way' when they want to do it the 'RED HORSE way.' There is a lot of good training for builders here too, laying block, renovating, framing and finish work, too."

The principal JTF task was to build a new school for the children of Timehri, Guyana. The existing school housed almost 500 primary school students in only four classrooms. When the Seabees arrived, the school principal was very happy that the kids would be getting a new building soon.

The Seabees thought the school project would be demanding. They were right.

DFT officer-in-charge LTJG David Colberg outlined the challenges. "Working in a rain forest in a developing country offers unique challenges. It rains here every day, on top of which we are

dealing with logistics and site conditions that we normally don't see on a typical detachment site."

One such site issue was uncovered while excavating. Sewage from the school's poorly maintained leech field started to seep into the work area. The continual rain that drenched the site further complicated the contamination issue.

"This situation had to be fixed immediately," Builder Constructionman Eric Dirk said. "We can't build a school where the kids could get sick—or we can get sick. We need to be safe while we fix the problem."

The drainage problems were soon fixed.

This Guyanese community was grateful for the Seabees and RED HORSE help.

"We are here to help this community and help the kids by building that new school," said Steelworker 2nd Class Gabriel Silva. "When we went to visit the old school, next door to the new one that the Seabees are building, the kids were so happy to see us! It really made us feel good to be helping the Guyanese people, and to represent the compassionate side of the military."

There is a lot to do in the next three months, but the kids will have their new school.

U.S. and Philippine Seabees Shoulder *Balikatan '04*

STORY AND PHOTOGRAPHS BY
CDR MEG REED

For U.S. Navy and Philippine Navy Seabees, the 2004 Balikatan exercise offered a chance for Bees from both countries to forge new ties based on military cooperation, friendship and shared training.

"Future collaboration efforts in staff planning and organization are being planned to further a relationship that began in shared history. It continues to grow from mutual training objectives," said Navy Capt. Joe Furco from the 9th Naval Construction Regiment (NCR). He led the naval construction element of Balikatan. "It's extremely important that we continue to maintain interest and involvement with the Philippine Seabees to meet the intent of our bilateral agreement," Furco said.

During the Vietnam era, the Philippine navy modeled its own Seabees after the U.S. Navy Seabees. In the late 1960s, with a U.S. Seabee presence in the Philippines during the war in Southeast Asia, senior Philippine navy officers believed a Seabee organization would benefit them, too. In 1967, the first Philippine naval construction battalion (NCB) was created after the American Seabee model. A few years later, a naval construction brigade was formed. In those early days, Philippine Seabees trained at Navy and Army bases in the United States.

Above and below, U.S. NMCB 1, Philippine Seabees from the 1st Naval Construction Brigade and Philippine Army engineers from the 51st Engineer Brigade worked side-by-side at the project site. They reconstructed a runway and built a 100 X 50 ft K-span building during and after *Balikatan '04*.

Just as American Seabees do, the Philippine Seabees support naval construction and combat engineering operations for their navy. Their organizational structure is similar to U.S. Seabees, but on a smaller scale. There are about 1,000 Philippine Seabees led by a one-star admiral, with four battalions falling under their NCB.

Before arriving for the exercise, some U.S. Seabees had only just learned about their Philippine counterparts. The Americans and their Philippine opposite numbers quickly discovered that they share more than a name and the classic Seabee logo.

Naval Mobile Construction Battalion (NMCB) 3 Engineering Aide 1st Class Kevin Taylor supervised some of the cross-training construction projects. "We've learned a lot from the Filipino Seabees," he said. "There are differences in our skill sets, but overall, we are both pioneers of the trade, hard-working and motivated."

Lt. Cmdr. Rigoberto Banta, operations officer of the Philippine NCB, said his troops would get important benefits from the combined training exercises. "We learned a lot from the U.S. Seabees and we believe the training has been very useful for how we operate. We expect this to be the start of more common training," Banta said.

Though the official exercise phase of Balikatan ended in March, but U.S. Seabees remained in-country for a few more months to complete exercise-related construction projects, including a full-scale reconstruction to a three-quarter-mile runway at Fort Magsaysay.

MTVR

MEDIUM TACTICAL VEHICLE REPLACEMENT

SEABEES ARE WORLD-FAMOUS FOR PULLING THEIR OWN WEIGHT. SOON THEY'LL BE ABLE TO PULL MORE.

When we profiled Truckzilla—the MK28 Medium Tactical Vehicle Replacement (MTVR) long-bed Cargo Truck—in our Fall 2002 issue, we forecast that this stable of Seabee SUVs would spawn a number of tough variants that put a fresh topspin on the word "utility." Well, here they are. The Naval Facility Engineering Command's (NAVFAC) Seabee Readiness Division and Oshkosh Truck Corporation (OTC) finalized an agreement for hundreds of units of the Truckzilla family, including more long-bed cargo models, a MK29/MK30 Dump, MK36 Wrecker and the possibly Seabee-exclusive MK31 Tractor. This remarkable fleet of robust cargo and heavy-duty work trucks can go anywhere and do just about anything, as we'll see, and they are already serving well in *OIF II*. There will be a Snowcone Festival in Hades before the MTVR is available for the Arnold Schwarzenegger's of the world to drive down Sunset Boulevard, but the military Humvee/civilian Hummer/plush H2 precedent is already set—and an MTVR can pull the wisdom teeth out of a Humvee. We'll take ours painted in Classic Cammie, please.

STORY AND PHOTOGRAPHS BY CHIEF JOURNALIST DANIEL CHARLES ROSS

The kind of driving most Seabee equipment operators engage in is slightly less casual than a leisurely roll down storied Sunset Boulevard through Hollywood, though driving the MTVR variants off-road is lots more fun.

When I climbed up into the cab of the MK30 Dump version, it was immediately clear that all the other cabs were stamped from the same mold. Literally. That made it easy for us to chose to put one unit through muddy test paces out back of Oshkosh Truck Corp., which is actually in Appleton, Wis., not Oshkosh.

The experience was a lot different—and much more satisfying—than our previous "drive" in the MTVR Simulator (Fall, 2002), though it began in the same way. The simulator uses the same cab, controls and instrumentation as the real, road-going vehicle.

The road-going Truckzilla is just a big, overgrown monster truck with the grip of a mountain lion and many of the road manners of the sport-utility vehicle in your neighbor's driveway. Despite the Seabee SUV's obvious size disparity, in a pinch the average Bee could climb right up into the truck and drive it fairly normally, as long as no parallel parking is involved.

The heavy duty Allison HD 4070P 7-speed automatic gearbox is engaged more easily than the automatic I once had in a civilian ride. Stepping on the accelerator produces a throaty roar from an oil-burning Caterpillar C-12 inline six—and there is no off-road experience quite like having 1550 lb-ft of torque peaking at just 1200 rpm, and turning six full-time drive wheels.

Parts and operating commonality, and reduction of build complexity, make all four MTVRs nearly identical from the cab's rear window forward, but there are some important differences among the new Truckzilla family members, notably in dimensions that start at merely "big" and range up to "huge."

Unlike with an automobile, where the wheelbase is measured from the centerline of the front wheels to the centerline of the rear wheels, Truckzilla's wheelbase is taped from the centerline of the front wheels to a point located between the tandem rear axles.

The Dump and Tractor, being based on essentially the same underpinnings as the standard Cargo chassis, have the same 184.0 in. wheelbase. But the Wrecker wheelbase stretches another 32 in. to 216. The Tractor obviously has much less rear overhang, so its overall length is a class-modest 297.4 in. With its Crysteel AR400 and 7-gauge abrasion-resistant steel dump bed, the Dump overall length reaches out to 317 in.

In this dimension, the Wrecker is again the champ. Because the Wrecker comes standard with a front-mounted self-recovery winch and the towing cradle must stretch beyond the aft "bumper," the Wrecker is a lengthy 387.2 in. Not to be outdone, the Tractor offers an important feature that the Wrecker could probably take maximum advantage of—6-wheel steering. See the sidebar on page 32 for more details on this system.

On the street, 20-in. wheels and tires are all the rage on the kewl rides of the hip-hop nation. The MTVR Tractor has 20-in. wheels too ... but while these dubs are not nearly as attractive as those on a video star's SUV, they are likely to hold up significantly better in the outback locations where the Tractor trods.

The Tractor (the entire MTVR stable, in fact) is shod with 10-lug 20x10-in. 2-piece steel bolt-together wheels. Two-piece construction is a method used extensively on high-performance road-going wheels and especially for use on full-boat race cars.

Big Wheels mean Big Rubber. The MTVR stable rolls on humongous 16.00R20 Michelin XZL off-road tires. The tread design has open shoulders and offset tread elements designed for traction and handling on the varied terrain these trucks operate over, including snow, sand, mud, and highway. The tires have a non-directional tread design for added versatility in the field—and because a directional tire, which may only roll in one direction, is impractical in a tactical environment. In a possible combat scenario, spares may have to be harvested

from other trucks without regard for what side of the vehicle they go on.

Application-specific tread compounds help provide wear resistance, improved tread and casing life. Full-width steel belts and elastic protector ply help provide extra casing protection against off-road hazards. The tubeless construction is compatible with central inflation systems as well as bead locks and/or run-flat devices.

The MK36 Wrecker is a frankly awesome vehicle to behold, with many of the visual cues we recognize in this sort of service vehicle but just blown up to gigantic proportions. The impression is driven home by the fact that most of us have seen (or used) a conventional tow truck in our lifetimes. Our cars break down; we're caught with a flat tire and no spare; we get behind in our steering on a snowy road and need to be hauled back out of that ditch.

The differences between the Seabee Wrecker and the tow truck your road service sends out are like the differences between a July 4th bottle rocket and a Poseiden ballistic missile. This is Gulliver's tow truck in the land of the Lilliputians.

The Wrecker is as much a go-anywhere MTVR as its broad-shouldered brothers, with a few important genetic differences owing to its unique role on the battlefield. First of all, it's the biggest MTVR in the motor pool, so it's also the heaviest. The curb weight is "only" 49,100 lb, but the Gross Vehicle Weight Rating (GVWR) pushes the needle up another 500 lb. It offers a cross-country flat-tow rating of an impressive 48,800 lb, with a flat-tow rating of 61,100 lb on the highway.

And as heavy as it is on the scale, it *still* is air-mobile. The Wrecker, as well as the other MTVR family members, can be quickly transported across the globe via rail, ship, Air Force C-5 "Galaxy" or C-17 "Globemaster III" cargo planes. It also has the expected hardpoints that easily permit it to be lifted by a crane.

The MK36 Wrecker also is an all-wheel/6-wheel drive truck, so scrambling across the goose-greasiest mud flat is about as simple as pushing the go pedal to the floor. It does not have the mechanical all-wheel steering of the MK31 Tractor, however (neither do the Dump or Cargo versions at this time), and with its additional length, the Wrecker's turning circle is thus understandably wider.

With 30-degree front approach and 41-degree unladen rear departure angles, the Wrecker has excellent obstacle-crawling potential. The principal slower-downer to completely unfettered cross-country autonomy could the combat tow truck's incredible length.

If you are cresting a particularly steep hill, you want to be a little careful how fast you charge over the top.

This is less a Wrecker than a Saver. The Manitowoc model 1731 boom offers a lift capacity of 22,000 lb when fully retracted to 9 ft in length. When the boom is extended to its full reach of 31 ft, it can still lift 3,960 lb. Not bad at all.

The main winch is comprised of two 35,000-lb dual-drum units of constant-pull design, equipped with 320 ft of 0.75-in. cable. The self-recovery winch on the front bumper is rated to 25,000 lb and is spooled with 200 ft of 5/8-in. cable.

There are numerous interesting sidelights to this remarkable—and remarkably capable—off-roader. Boom operations are stabilized by twin hydraulic pistons that drop down on both sides of the Wrecker just inches forward of the center of gravity. A remote operating panel gives the operator full control of boom ops.

The vehicle can cross water like an otter, fording depths up to five feet without a snorkel kit. And among the kits available are those for fording, arctic ops, chemical alarm or decontamination equipment mounting, and extras like in-cab air conditioning, tire chains and a sliding rear window.

The MK29/MK30 Dump variant (the MK29 is front-winchless) is a work truck that can haul all the loads Seabees need hauled. A 6.5-cu ft dump box is 96 in. wide inside, 84.5 in. long and 22 in. in height, with an Aero Easy Cover for the loaded condition. The Roller Combo RC-580 hoist is rated for up to 25.3 tons of box content that can be dumped at any angle up to 50 degrees.

The payload capability is rated at 28,000 lb on-road and 12,200 off-road. The Dump

The Tractor's All-Wheel Steering System

The MTVR MK31 Tractor variant is equipped with a patented new all-wheel-steer (AWS) system that reduces the vehicle's turning circle. This facilitates driving a Tractor with a trailer in conditions where sharper turns may be required, such as narrow city streets.

The system at the rear axles is based on a conventional front steering system; the purpose of the other components is to get rotary control to it. The front system's slave gear has one extra feature, an output for the rear control shaft to pick up what the front is doing. The ratio box is a simple gear case that determines the ratio of the front-to-rear steer angles.

The "dwell" part of the Dwell/Centering Mechanism (DCM) causes the rear to not respond when the driver's steering wheel is turned the first 95 degrees to the left or right. After that, the rear responds in a gradual, proportional fashion with no time lag. The "centering" part of the DCM is a spring-loaded device that holds the rear in the straight-ahead condition during the plus or minus 95-degree dwell and greatly improves steering feel. It causes the rear to return to center as soon as the steering wheel is backed off to 95 degrees. Without this feature, the driver would have to go 95 degrees the other way before the rear started returning to center, resulting in sloppy steering feel.

The operator benefits include a much tighter turning circle, allowing the driver to pull the trailer deep into an intersection, for example, before starting his turn-in. This minimizes the chance of the trailer clipping a curb or other obstacles during a turn.

No special procedures or training are required to back the MK31 with AWS up to a trailer. Equipment operators just back up like they would in a typical front-steer tractor and the rear does what the driver expects—only sooner. Backing up with front steer only, the driver can't make the fifth wheel shift left until he or she have rotated the vehicle by moving the front axle over to the right. With rear steer, the fifth wheel starts moving sideways immediately, improving the driver's ability to make last-second corrections.

The AWS system's dwell band ensures that the handling characteristics at speeds above 40 mph remain predictable and safe. Any truck/driver combination can become safe with years of experience; this system hitchhikes on the driver's experience with other trucks by mimicking their handling.

Independent front and rear suspension help provide credible on-center steering feel. The driver is able to keep the truck on his or her intended path with almost unnoticeable steering corrections, versus a standard axle/suspension system that requires much more steering wheel motion before the axle responds.

— Brian Anderson
OTC Component Engineering Supervisor

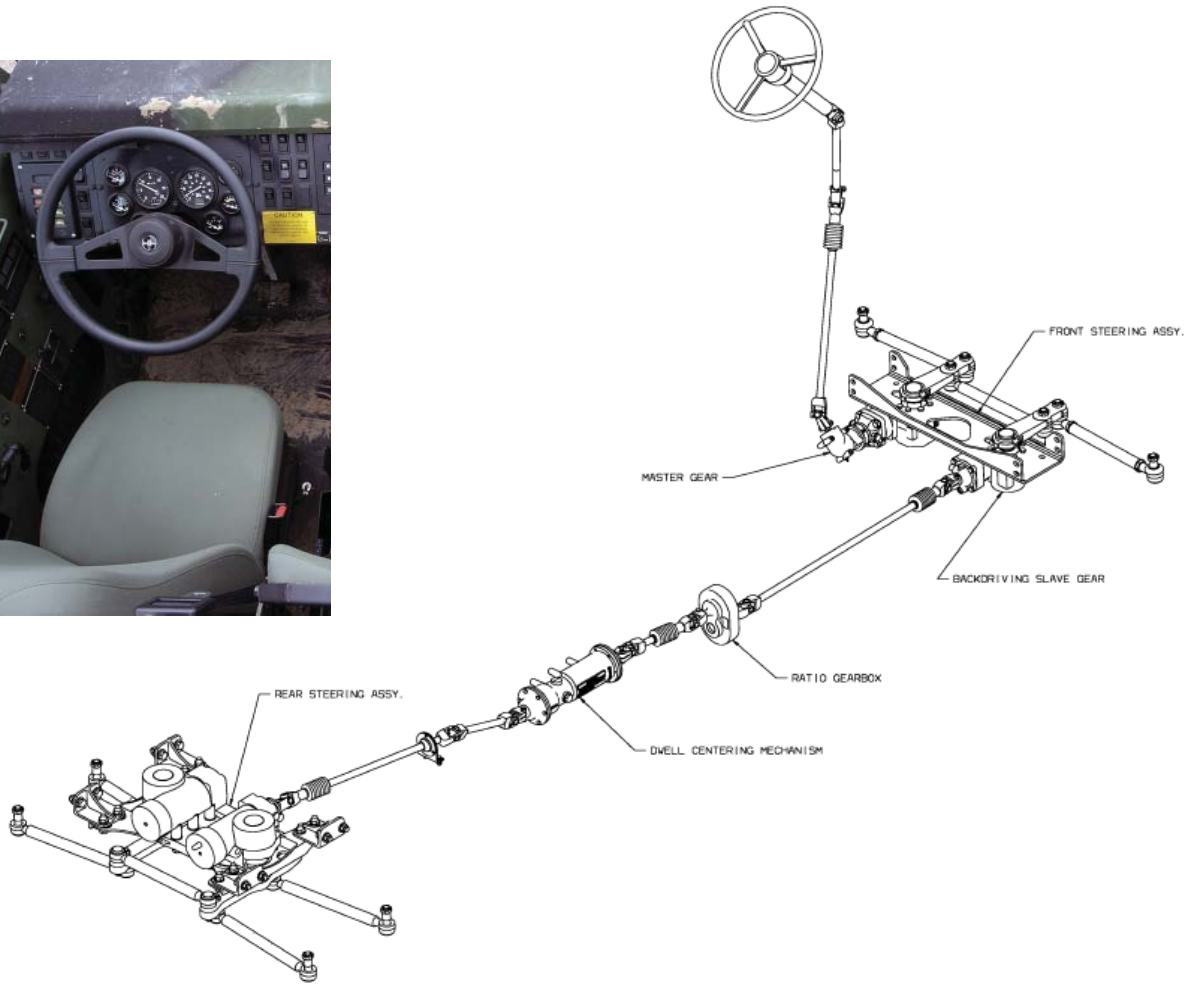

ILLUSTRATION COURTESY OTC

truck's GVWR is maxed out at 58,000 lb.

Actual driving of the MTVR is comparatively easy. Anyone who has driven a large civilian SUV will be familiar with the concepts.

As with any large, heavy vehicle, care must be exercised to leave plenty of time to accelerate and plenty of room to slow down, especially on slick or wet surfaces. The MTVR has good grip on-road and especially off, and we found muddy terrain presented no trouble at all in our time at the wheel. If necessary, even more grip is just a push-button away.

If 6x6 all-wheel drive isn't enough, the Central Tire Inflation System can deflate the tires to provide additional loose-surface grip. The system can be engaged to reinflate the tires on the fly once the low-pressure need has passed.

But there is definitely a reason why Seabee EOs must be trained and qualified to operate the Truckzilla family.

Each vehicle has its own operating envelope and conditions, and you must *never* operate any of these expensive trucks without qualified supervision or your own applicable quals, especially when loaded or on uneven terrain. We even used professional drivers on a closed course to drive the trucks for our story's photo session.

Seabees always knew they had some of the most interesting jobs in the entire U.S. Navy. Now, with the additions to the Truckzilla fleet, they also have more of the most interesting tools.

The new MK27/MK28 MTVR Extended Cargo variant is motivated by a turbocharged Cat 6-cylinder engine producing 425 horsepower. And while it has traction control and anti-lock brakes, 15 tons of on-road cargo capability does not stop on a dime. The all-wheel-drive, all-wheel-steer MK31 Tractor, sometimes referred to as the MET (Medium Equipment Transporter), brings new capability to the Seabees.

PHOTO COURTESY OTC

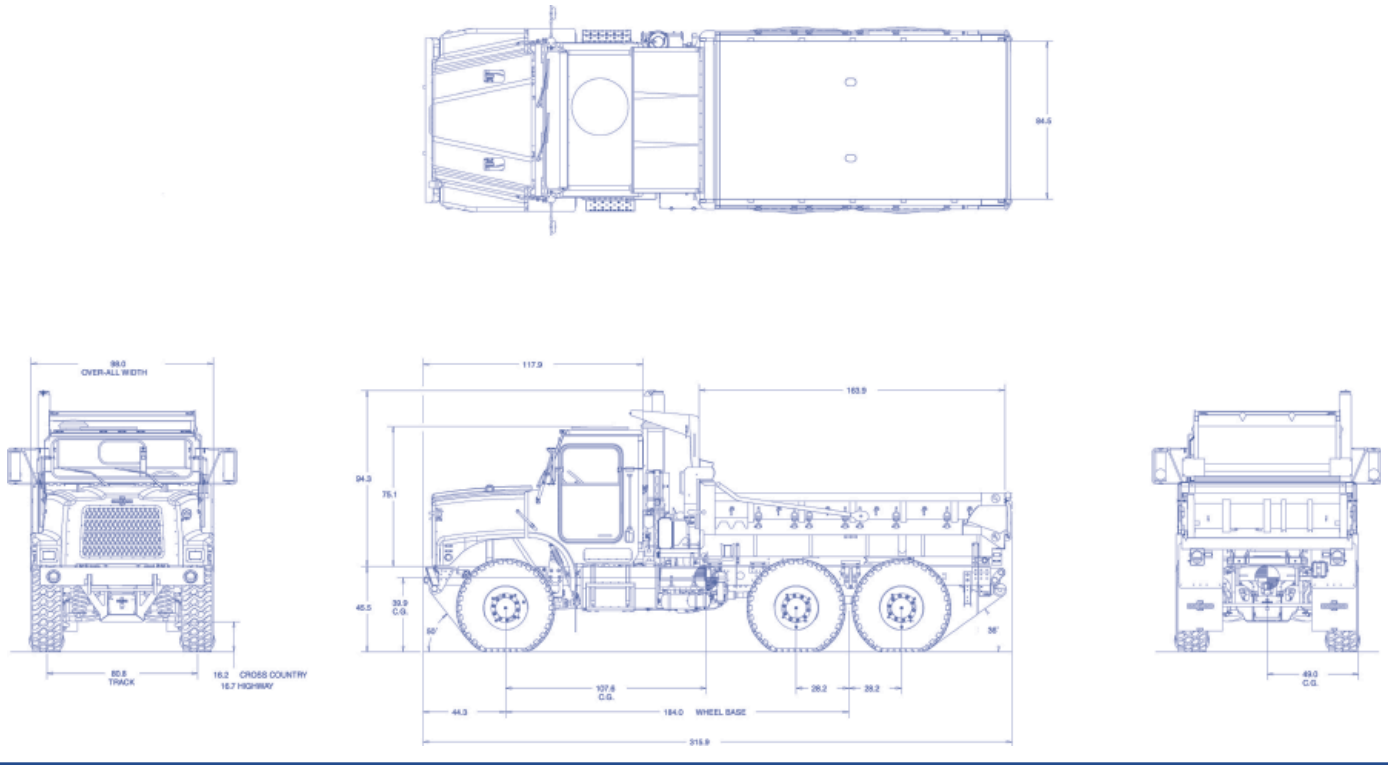

B A S I C V E H I C L E D A T A

Engine:
Make & model..... Caterpiller C-12
Type..... 6-cylinder inline diesel, 4-stroke
Bore & stroke (in/mm)..... 5.12/5.91 (130/150)
Displacement (cu in/L)..... 729/11.9
Power @ rpm (hp/kW)..... 425/317 @ 1800
Torque @ rpm (lb-ft/Nm)..... 1550/2101 @ 1200
Transmission:
Make & model..... Allison HD4070P 7-speed automatic w/electronic control; second-gear start; TC-541 torque converter
Transfer case..... Oshkosh 30000 Series; torque split F/R, 32/68; 3-shaft, single speed; torque proportioning differential with manual diff lock
Interior:
Front seats..... Suspended driver seat and 2-passenger bench seat
Restraint systems..... Manual 3-point belts
Electrical system:
Alternator..... 150 amp
Voltage..... 24, w/12v accessory outlet in cab

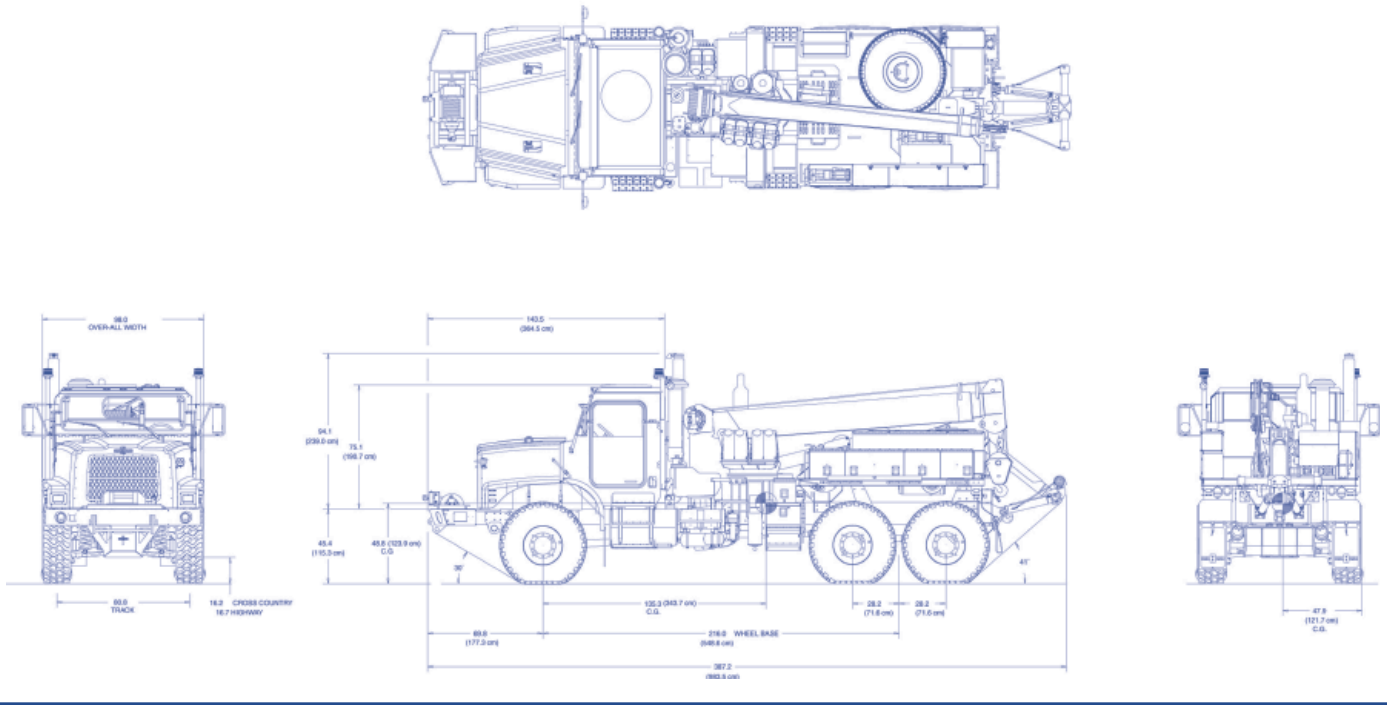

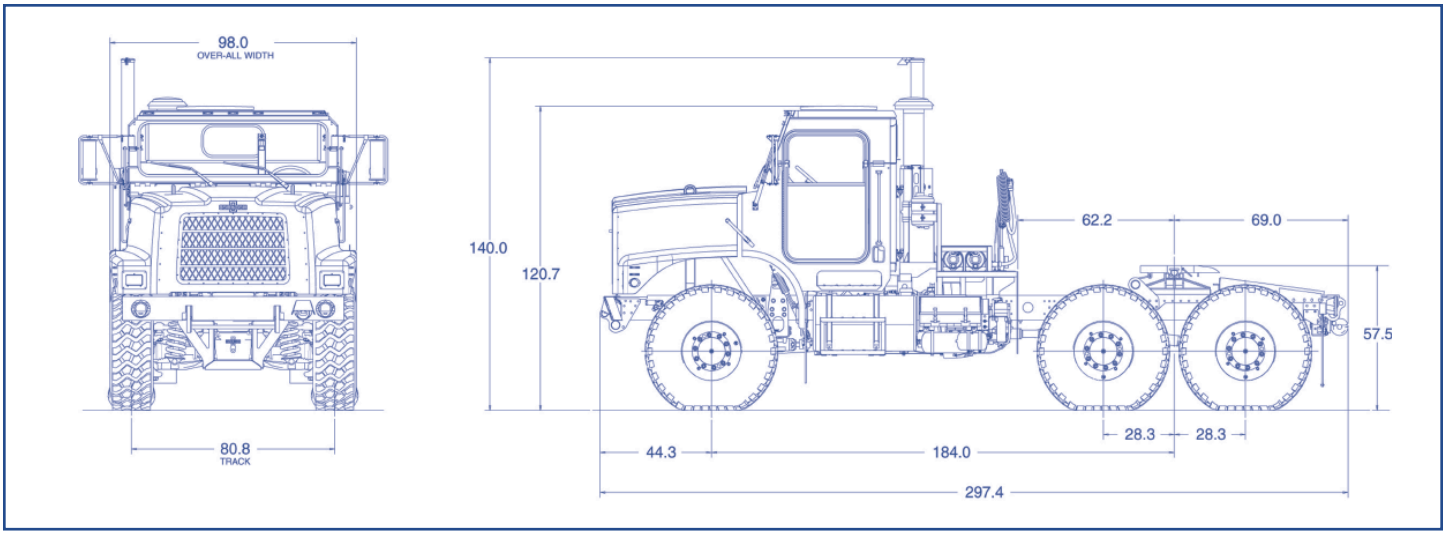

S P E C I F I C A T I O N S

	MK31 TRACTOR	MK36 WRECKER	MK29/30 DUMP
VEHICLE TYPE	Front-engine, all-wheel-drive, 3-passenger, 2-door tractor	Front-engine, all-wheel-drive, 3-passenger, 2-door wrecker	Front-engine, all-wheel-drive, 3-passenger, 2-door dump
DIMENSIONS			
Wheelbase, in.	184.0	216.0 (548.6)	184.0
Track, front/rear	80.8	80.8	80.8
Length/width/height	297.4/98.0/140.0	387.2/95.8/141.2	317.0/98.0/141.2
Ground clearance, in.	16.7	16.7	16.7
Curb weight, lb	26,500	49,100	30,000
Gross vehicle weight rating	121,000 (GCWR threshold)	49,600	58,000
Fuel capacity, gal	78	78	78
Oil capacity, qt	36	36	36
Water/coolant capacity, qt	47.6	47.6	47.6
Max road speed, mph (kph)	65 (105)	65 (105)	65 (105)
Fording capability, in. w/out kits	60	60	60
SUSPENSION			
Front	Independent, Oshkosh TAK-4, coil springs	Independent, Oshkosh TAK-4, coil springs,	Independent, Oshkosh TAK-4, coil springs
Rear	Independent, Oshkosh TAK-4, Hendrikson Hydro-pneumatic	Independent, Oshkosh TAK-4, Hendrikson Hydro-pneumatic	Independent, Oshkosh TAK-4, coil springs
STEERING			
Type	Recirculating ball, power assist, mechanical all-wheel steer, Sheppard master and slave gears	Recirculating ball, power assist, Sheppard master and slave gears	Recirculating ball, power assist, Sheppard master and slave gears
Steering ratio	Front: 19.1 Front/Rear overall: 1.6:1	19.1	19.1
Turning circle, ft	60 (curb to curb)	102 (wall to wall)	85.4 (wall to wall)
BRAKES			
Type	Bendix, air operated, anti-lock with automatic traction control	Bendix, air operated, anti-lock with automatic traction control; parking spring brakes on axles 2 & 3; trolley brake	Bendix, air operated, anti-lock with automatic traction control; parking spring brakes on axles 2 & 3
MAJOR SPECIFIC SYSTEMS	Holland Kompensator fully oscillating fifth wheel, 2 in. SAE kingpin, vertical loading 38,000 lb; Dana Central Tire Inflation System w/selectable terrain settings	Twin 35,000-lb winches, dual-drum, constant-pull design, w/320 ft of .75-in cable; 25,000-lb self-recovery winch; Dana Central Tire Inflation System w/selectable terrain settings	6.5 cu yd dump bed of AR400 corrosion-resistant steel; Rollor Combo RC-580 hoist; 50-deg max bed angle; Dana Central Tire Inflation System w/selectable terrain settings


WEIGHT: 49,100 LB LIFT & TOW: 48,8

800 LB LIFT: 22,000 LB AXLES: 6X6

Electronics Technician 2nd Class (SCW) Kelly Klerk, assigned to Naval Mobile Construction Battalion 74, is a qualified driver of the MTVR cargo truck. The battalion uses the MTVR for multiple tasks on its six-month deployment to *Operation Iraqi Freedom*.

U.S. NAVY PHOTO BY PH2 (SCW/FMF) ERIC POWELL

The MTVR is built on a moving assembly line that moves snake-like through the Oshkosh Truck Co. facility (left). Just as the cargo truck's DNA spawned the wrecker, dump and tractor, other Truckzilla are being created. This right-hand-drive tractor and long fuel/water tanker is for the U.K.

MEDIUM TACTICAL V

WHEN IT ABSOLUTELY, POSITIV

SEA

MA

EHICLE REPLACEMENT

ELY MUST BE DELIVERED. PERIOD.

BEE
GAZINE

SERT II:

Seabee Engineer Reconnaissance Teams deploy tough vehicles, advanced tactics and extraordinary skill to take a mission, get it done -- and get back home.

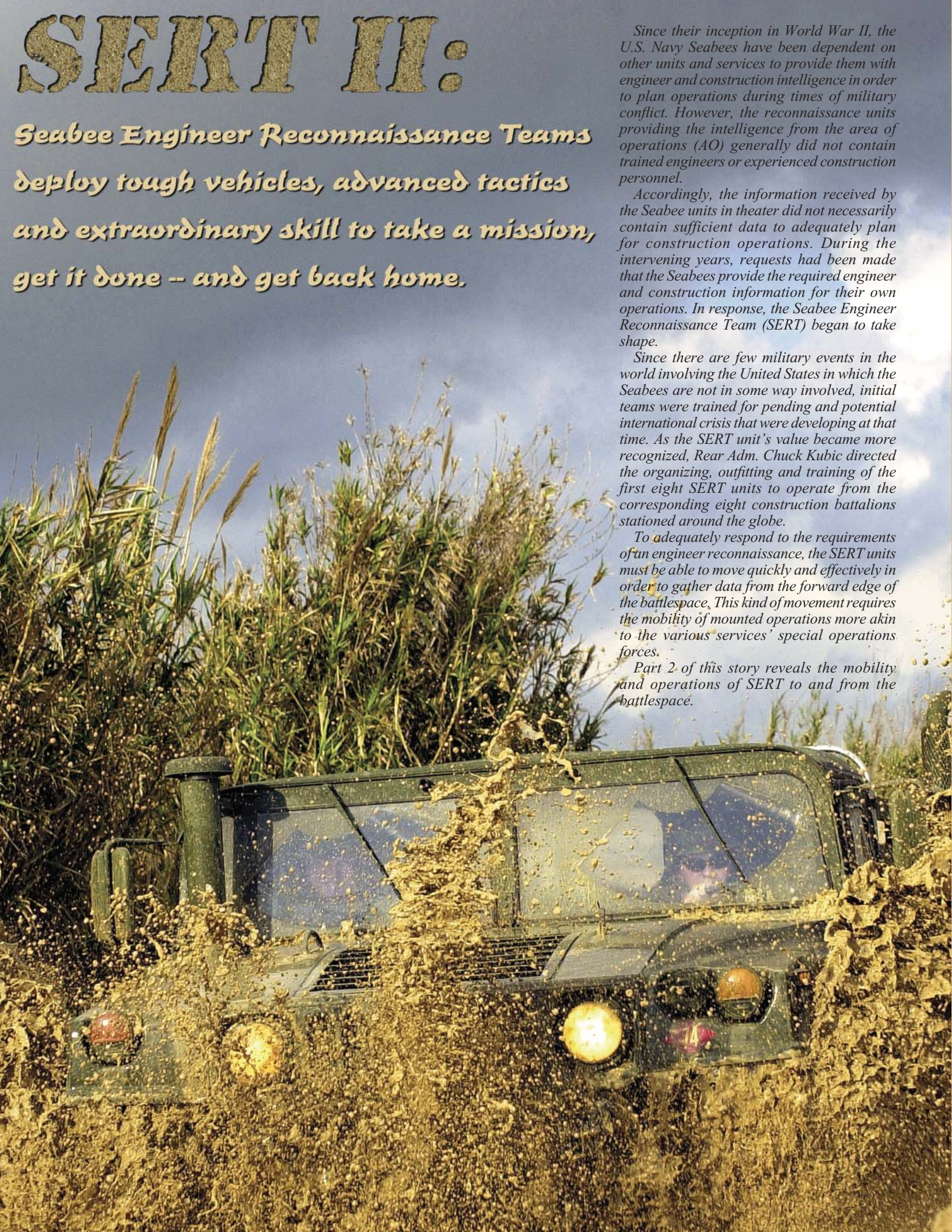

Since their inception in World War II, the U.S. Navy Seabees have been dependent on other units and services to provide them with engineer and construction intelligence in order to plan operations during times of military conflict. However, the reconnaissance units providing the intelligence from the area of operations (AO) generally did not contain trained engineers or experienced construction personnel.

Accordingly, the information received by the Seabee units in theater did not necessarily contain sufficient data to adequately plan for construction operations. During the intervening years, requests had been made that the Seabees provide the required engineer and construction information for their own operations. In response, the Seabee Engineer Reconnaissance Team (SERT) began to take shape.

Since there are few military events in the world involving the United States in which the Seabees are not in some way involved, initial teams were trained for pending and potential international crisis that were developing at that time. As the SERT unit's value became more recognized, Rear Adm. Chuck Kubic directed the organizing, outfitting and training of the first eight SERT units to operate from the corresponding eight construction battalions stationed around the globe.

To adequately respond to the requirements of an engineer reconnaissance, the SERT units must be able to move quickly and effectively in order to gather data from the forward edge of the battlespace. This kind of movement requires the mobility of mounted operations more akin to the various services' special operations forces.

Part 2 of this story reveals the mobility and operations of SERT to and from the battlespace.

The SERT is a mounted detachment designed to operate in low to medium-intensity conflicts, over terrain ranging from high deserts with rugged mountains to low deserts with sand dunes and salt marshes; arctic snow and ice; tropical forests and jungles and the topography of the middle latitudes. In other words, SERT must have organic mobility anywhere in the world a current crisis dictates.

The capability of these detachments to travel unassisted for long distances gives the joint forces commander an effective tool for acquiring engineer data from the forward edge of the battle area (FEBA).

Mission

In preparing for conflicts at the FEBA, it's assumed that the distance from the forward operational base (FOB) to the area of operations (AO) is too great for dismounted movement. The SERT unit cannot rely solely on limited air assets to move operational detachments into their AOs. The major role for these detachments is to conduct medium to long-range Seabee engineer reconnaissance operations. They can also expect to do area recon missions and to conduct civil action support. In addition to standard missions, mounted teams may be used to transport other personnel and/or equipment in or out of their target areas.

Another important role for these dets, especially in today's world, is to conduct coalition support and/or foreign internal defense missions with nations possessing extensive mounted capabilities.

To be effective in these roles, SERT mounted detachments must operate and communicate over long distances; operate in rugged terrain both on and off road; and make on-site repairs on all equipment — typically using only the skills of the detachment members and tools and parts carried with them.

Mounted operations provide reasonably rapid and secure operational assets within the theater. SERT ops can be expanded with the mobility of mounted dets to include medium and long-range recon of the engineer and construction requirements at and to the rear of the forward battle area.

SERT may also provide combat support operations to include Foreign Internal Defense (FID) re-supply, patrol ferry and communications relay, site security roles and assistance to civil actions. The mounted detachment has the ability to conduct expanded advisory assistance operations.

Capabilities of Mounted Seabee Engineer Reconnaissance Missions

Among the many advantages to using mounted SERT detachments for operations are these characteristics:

COMPATIBILITY Can work with foreign and U.S. mechanized troops without additional vehicle assets.

MOBILITY Can rapidly cover long distances, diminishing reliance on aircraft for operational support.

AIR MOBILE Can use a variety of aircraft.

ENDURANCE Can remain in the field for extended periods without the need for resupply.

TRANSPORTATION Can ferry specialized equipment and dismounted elements into AOs.

FIREPOWER Can bring considerable force to bear in order to break enemy contact using the weapons systems on their vehicles.

There are also a handful of difficulties to a mounted operational element. Detachment personnel must be skilled in vehicle maintenance and repair, including depot-level maintenance procedures. Teams require additional tools and parts to sustain extended operations.

Personnel will require additional training, including mounted tactics, navigation techniques, maintenance and repair and vehicle camouflage. Security erodes in proportion to the size of the element. The number of vehicles involved in the mission, the footprint they leave and noise and light they may produce will increase the possibility of detection.

Mounted Detachment Organization

The mounted det is organized to take full advantage of the capabilities and flexibility of its equipment and members' skills. Although cross-trained in different duty positions, it's critical that detachment members thoroughly understand their primary vehicular duty position so that the det operates effectively and safely as a team. Mounted detachments are organized around three prime movers. The first and perhaps most important is called the Vehicle System (VS).

The VS consists of the GMV, a modified M1025A2 HMMWV; an operations trailer (OT); all-terrain vehicle (ATV); and GPS that is vehicle-mounted and vehicle-powered. The GPS can also be used in a dismounted mode.

In addition, weapons include a crew-served weapon system, .50 M2 heavy barrel (HB) machine gun (MG), M60E MG, M16A, and 9 mm pistol. Vehicular radio communications system with frequency

U.S. NAVY PHOTOS BY
PH2(SCW/FMF) ERIC POWELL (2)

CECN Jose Sarno (L) and CE3 Roberto Cortezcota from Naval Mobile Construction Battalion 74 prepare for deployment to *Operation Iraqi Freedom*.

UNLESS OTHERWISE NOTED,
U.S. NAVY PHOTOGRAPHS BY
CHIEF JOURNALIST
KEVIN ELLIOTT

>>

hopping and secure capabilities. The system also has a battery box to use the receiver-transmitter (RT) in a dismounted mode.

In a perfect world, a mounted detachment will have three GMVs, two ATVs, two M2 MGs, three M60Es, four GPS units, 12 AN/PVS-7 night-vision goggles (NVGs) and four vehicle-mounted radios. Mounted detachments will modify their vehicles to best suit their missions and standing operating procedures. During military operations other than war in an urban environment, the mounted detachment may use the M1114 (armored) Humvee.

Vehicle positions and duties

The detachment may maneuver as three separate elements for a very short time, with each vehicle operating independently. Regardless of how many elements the detachment is broken into, three SERT members man each vehicle. The duty positions are driver, navigator and weapons system operator. Each person, however, must be fully checked out in the duties and responsibilities of all the other duty positions. Personnel configuration of the section will depend upon the individual skills of the detachment members.

SERT vehicle positions and duties:

VEHICLE #1
Primary Driver: engineer supervisor
Weapons System Operator: weapons officer
Navigator: assistant operations officer

VEHICLE #2
Primary Driver: medical supervisor & ATV-1
Weapons System Operator: communications officer
Navigator: detachment commander

VEHICLE #3
Primary Driver: medical petty officer
Weapons System Operator: weapons supervisor & ATV-2
Navigator: assistant detachment commander

VEHICLE #4
Primary Driver: communications PO
Weapons System Operator: engineer PO
Navigator: operations PO

Primary Driver

Performs the preventive maintenance checks and services (PMCS) with assistance from the vehicle crew. Assumes most of the vehicle operating duties. Ensures that the vehicle is topped off with fuel at the end of each movement and that the vehicle is prepared for the next night's movement. Monitors the fuel, water, and rations level for the vehicle. Advises the vehicle commander (the navigator) of the situation before the next night's movement.

Weapons System Operator

Responsible for the onboard weapons system. Standard armament for a mounted detachment is one .50 M2 HB MG and one 7.62 M60E per section (total of 2 M2 HBs). Usually the M2 HBs are on vehicles #1 and #4 and the M60Es are mounted on vehicles #2 and #3. Observes for enemy activity in his vehicle's assigned sector during movement. From position outside of and on the top of the vehicle, he has the greatest field of view and his vision is unrestricted by windows and doors. Communicates with the navigator and the driver to alert them to any hazards or obstacles in the path of the vehicle or enemy activity. Accountable for the internal load of the vehicle. Ensures at the end of the night's movement that the internal configuration of the vehicle is squared away and that everything is secured to the vehicle and essential equipment is accessible. Advises the vehicle commander daily on the vehicle's weapons and ammunition status.

Navigator/Vehicle Commander

The navigator in vehicle #1 is the primary navigator for the detachment. Able to determine position at any time within one hundred meters with a GPS or within one-quarter mile without. The other three vehicle navigators check the primary navigator and help negotiate obstacles. Performs route planning, to include preparing the route-planning log. Performs PMCS on the vehicle's communications system. Ensures the correct frequencies and crypto keys are loaded. Ensures spare batteries are accessible in case of battery failure during movement. Maintains the GPS and the vehicle's compass. Accounts for all additional equipment that is stored in the vehicle storage bins behind the driver's seat.

ATV Operator

When deployed, the ATV riders come from vehicles #2 and #3. Vehicles #2 and #3 are the prime movers for the ATVs and act as a "mother ship" for them. The ATV riders maintain the ATVs with assistance from their vehicles' crew. The ATV section, never operating as single units, scout the tentative route; reconnoiter point or area targets, and acts as a forward warning element for the detachment. Planning and preparation for a mounted mission starts long before the detachment is alerted. Preparations include training and rehearsals needed to prepare the team to move unassisted up to 300 miles or for three days.

The distance from the forward edge of battle to the area of operations, or even the staging (launch) site, may require other transportation resources than the GMV. Various combinations of aircraft, rail line, and/or surface ships may be required to get the mounted detachment positioned to the operational area. These combinations may also be used to increase the operational range of the mounted detachment by decreasing the required distance overland.

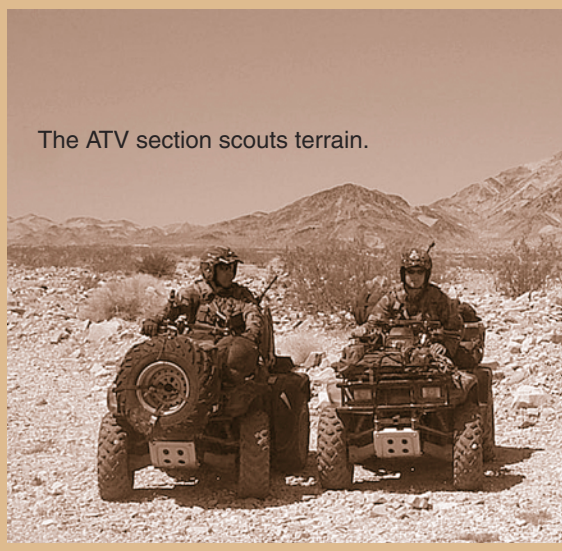
The ATV section scouts terrain.

When an operation requires both aircraft and surface ships or other combinations, a rendezvous occurs to transfer the operational element(s). The method selected should be one that will land or position the element as close as possible to its AO as simply and rapidly as possible and with the least chance of detection.

In planning for a successful movement, the mission determines what and how much ammunition and demolitions are necessary, including special equipment. The order of battle affects the routes, communications procedures and capabilities, exfiltration capabilities and sources of re-supply.

Terrain and weather also affect planning, personal equipment and special equipment needs. Light conditions help determine the time of day best suited to movement with regard to an enemy situation.

The SERT will plan for the minimum levels of all required supplies. Mission-essential equipment and supplies will prioritize space available for them. During planning, the det may learn that pre-positioned equipment is available in the AO. This equipment can range from

LTJG Christian Brumm (L) gets pictures of a landing site during a SERT drill.

fuel and water to a complete GMV with weapons, communications equipment and prescribed load list. Pre-positioned supplies greatly reduce the amount of vehicles and equipment the detachment must deploy overseas and generally speeds up overall deployment. However, when planning for such equipment, the detachment must allot time to inspect and prepare the equipment when it arrives in country.

Availability and training level of det personnel are quite obvious considerations. Operational dets are proficient in air insertion and in dismounted operations, but the unit's long-range mounted operations require special training. This will include cross-country and night driving with and without night-vision aids, vehicle navigation, vehicle maintenance, recovery operations, and mounted weapons system use. Vehicle infiltration, mission support site (MSS) and hide-site establishment, vehicle recovery operations, mounted and dismounted crew battle drills.

The priority on collective detachment training with the vehicles must always be concentrated in maintenance areas. The team members generally have only each other to depend on when operational and they can never know enough about working on their vehicles.

All ratings require special skills or knowledge to effectively augment the mounted detachment. Detachment members who have a mechanized background are always assets. Mounted detachment personnel require thorough cross training.

Each vehicle must be able to operate independently for extended periods. Place a priority on communications, medical training, basic employment and maintenance. Skills not practiced are skills lost. Constant training and cross-training ensure success when at combat speed.

Vehicle Preparation

There are no motor pools in the AO where a det can effect repairs; all maintenance and repair operations take place in the field.

The GMV is not only a mode of movement and exfiltration; it also is a duration and distance enhancement and survival platform for the mounted SERT det. Detachment members load each vehicle so that it can act independently during the mission. They must consider weight carefully. Too much equipment is just as bad as not enough, and an overloaded vehicle handles poorly, consumes fuel at a higher rate, lacks power and will experience more maintenance problems.

Items having the greatest effect on weight are fuel, water (50 lbs per 5-gallon container), ammunition by type (including shipping containers) and personal equipment.

Try to limit unnecessary equipment. There is a tendency to carry more equipment because there may be room.

Knowing one's vehicle and its capacity significantly enhances mission success and the crew's trust in their vehicle. Avoid borrowing or loaning vehicles at the last moment.

If you must borrow or loan, allow enough time for detachment members and motor pool personnel to perform pre-mission maintenance checks.

Pre-mission vehicle inspection is vital, as there are no motor pools at the FEBA.

Equipment and Personnel Prep

An important aspect to pre-mission preparation is vehicle maintenance and keeping all equipment in a go-to-war status. Members must inspect and exercise their vehicles even while in garrison. The detachment operations officer is responsible for status of the detachment's vehicles. The vehicle navigator is responsible for the status of his vehicle.

Ensure proper PMCS in garrison by moving all SERT vehicles out of the motor pool monthly to exercise and test the equipment. This test should include on- and off-road operation in all gears. Check for wheel alignment and listen for any unusual noises. A vehicle left alone in the motor pool will break down. The more these vehicles are exercised, the better they will work.

PMCS at Motor Pool

Keep the basic equipment common to each mission on the vehicle at all times. This equipment includes tools and petroleum, oils and lubricants (POL); spare parts; recovery items; tire repair kits and miscellaneous mission items. Such actions will not only save loading time (and storage space needed to store these items between missions), but they reduce the chance that these items will be forgotten.

Prepare each vehicle using a vehicle loading list. This list is compiled from team SOPs, experience and mission requirements. Simplicity is the key to success. A good tool is a loading plan that standardizes the location of equipment common to all in each vehicle. This plan ensures that anyone assigned to the detachment can go to any vehicle and locate or pack team equipment. Control and assist the preparations after alert using pre-mission checklists. It's the detachment operations officer's job to ensure the achievement of pre-mission require-ments.

Conduct inspections to ensure the vehicles are loaded properly. Upon receipt of a notice

USN

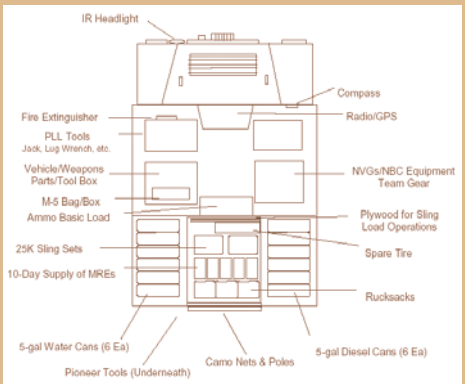

Typical GMV load map.

to deploy, inspect the detachment vehicles as soon as possible to ensure mechanical reliability—this is vitally important if you don't want to walk (or run) home. Conduct this inspection at least 30 days before vehicle shipment (or as early as possible) to allow motor pool personnel time to correct any deficiencies. Do not inspect the vehicles only per the operator's manual—do a methodical "crime scene search" better than anything you've ever seen on *NYPD Blue*.

Conduct a vehicle going-over from top to bottom. A good reference to follow for this inspection is the annual inspection required for the HMMWV. Motor pool personnel will help inexperienced det personnel perform this key examination. It is very important that det personnel be present at this inspection. Mission success—and even the SERT members' lives—may depend on deficiencies found and fixed during this review of the vehicle.

You wouldn't buy a new or used car without test-driving it first, so test-drive each mission vehicle to ensure mechanical reliability. Make sure the fluids are topped off and the vehicle is taken up to operating temperatures. Check hill-climbing ability, winch operation with load, transmission and transfer case performance through all gears on challenging terrain, engine performance, front and rear wheel alignment and listen for any unusual noises or rattles.

After this inspection and test, rate each vehicle by performance. The stronger vehicles should perform the more challenging aspects of the mission. Avoid overloading or hauling trailers with the weaker vehicles.

The next inspection should take place three to five days before load-out or during isolation. Inspect the items normally kept on the vehicle and all mission-related equipment. A good way to inspect this equipment is to separate the mission-essential equipment by vehicle.

Each vehicle team inspects its own equipment to ensure reliability of one's own equipment and ability to operate the equipment. The last inspection should be the normal final inspection or spot-check, done during the last few hours before the infiltration or shipment of the equipment.

This sounds like a *Duh!* moment, but ensure you plan for sufficient fuel supplies. Fuel trucks or fuel points often will not be available in the mission area. Frequently, it will be difficult or impossible to get any kind of re-supply. For general planning purposes, use a figure of 9 mpg for initial estimation of fuel requirements.

Plan to take adequate water. Minimum water planning figures are four to six quarts per person per day for mounted operations in the desert. Take additional water for dismounted missions within the mounted role. Do not count the water carried on individual load-bearing equipment (LBE) for this requirement. Detachment members use a vehicle water bottle for the crew. They never use the water supplies on their LBE unless separated from the vehicles during dismounted operations or when placed in a survival or evasion situation.

Plan for and take adequate food supplies. Food consumption in hot, dry climates is generally less than in other climates. To limit the extent of unpacking their rucksack when getting meals, individuals should pack the majority of their food items in a ditty bag. A ditty bag ensures they will have a minimal kit of food and survival and evasion items on hand. Construct the ditty bag from a durable bag large enough to hold three days of food, minimum sleeping gear, personal escape and resistance gear, first-aid kit and personal toilet articles.

Include a minimum of three meals in the rucksack so that you will have a food supply if required to abandon the vehicle rapidly. If several cases of food are packed on the vehicle, the crew avoids opening more than one case at a time.

Place ammunition where it can be accessed quickly. Secure large ammunition cans or containers to prevent injury in accidents due to shifting loads. Construct and position a vehicle destruction kit for quick accessibility. Each member should have three basic loads of small-arms ammunition: one on the LBE (primary), one in rucksack (alternate), and one in an ammo can positioned in the vehicle (contingency). The ammo can in the vehicle should contain all contingency ammunition for the crew. Position basic signaling ammunitions near the navigator's position. These include colored smokes and colored star clusters to aid in identification.

Plan for maintenance and repair contingencies based on the mission, the terrain and weather in the operational area, mission duration, and maintenance experience. The mounted detachment normally carries one general mechanic's toolbox with metric supplement per section.

Each vehicle carries its own operator vehicle maintenance (OVM) set. Each vehicle also carries a small supply of motor oil (15w-50), Dexron II transmission fluid, and brake fluid for basic maintenance needs. For long-duration missions, the trailer towed by the second and third vehicles carries the majority of the maintenance supplies.

Each vehicle should also carry one complete replacement set of fluids, including motor oil, transmission fluid, brake fluid and radiator coolant or antifreeze. Carry basic spare parts such as fan belt, upper and lower radiator hoses, and main fuel tank drain plug. Construct a general repair can to carry such items as tire plug kit, automotive liquid metal, assorted hose clamps and radiator repair kit.

On long-duration missions requiring trailer usage, construct an additional spare parts box to carry such items as starter, alternator, half shafts, glow plugs, and battery. The detachment will normally carry enough POL and PLL to repair or replace any maintenance problem in the field if it is at all possible to repair or replace. Once everything is packed and ready for deployment, strap down and secure all equipment and supplies against movement inside the vehicle. Cross-country driving makes it essential that all equipment

SERT GMVs fan out across the desert in a wedge manuever formation.

USN

LT Kyle Croce patrols a landing site during a SERT drill. Stealth and vigilance during the mission are essential.

be tied down.

Operational Employment

The success of the mission and survival of the operational detachment lies in its ability to move, conduct operations and exfiltrate-all without being detected. In mounted operations, survival depends upon moving solely at night and using proper camouflage measures during the day.

Movement to FEBA and Exfiltration

The threat to each method of movement to and from the AO is different. Here are some typical threats to a mounted detachment when moving by air or by ground.

Air Movement

Mounted detachments moving by air must avoid an extensive and integrated enemy air defense system. Such a system provides complete coverage at medium to high altitudes with a high redundancy of coverage in heavily defended areas. Soviet doctrine, currently used by many nations in the Middle East, has made concerted efforts to improve low-altitude detection of intruders by air.

Ground Movement

Mounted detachments moving by land must avoid hostile forces. These forces employ sensors, minefields, other barriers, patrols, checkpoints and other control measures to detect clandestine movement.

The mounted detachment can use several platforms to move to its mission area.

The C-130 Hercules aircraft has a great deal of advantages as an air platform. The team can fit two vehicles per aircraft. Weapons system will be mounted and cleared. Vehicle will be mission ready with the exception of ammunition in the weapons system. Everyone will ride on the aircraft. Fuel tanks have to be half empty on C-130 aircraft, without waiver. MC-130s will normally allow the vehicles on with a full tank but full tanks must be coordinated beforehand. A C-130-capable dirt strip is required (916 meters).

The GMV will fit inside a CH-47 or MH-47 helicopter with two inches of clearance around the vehicle. This clearance makes for a very tight fit and must be carefully rehearsed with the aircrew. Planning considerations for this aircraft include rigging the vehicle to ensure no objects extend from the top or sides of the vehicle. The weapon system will be stored as one unit. It cannot load with trailers. Plan for rehearsal time with driver and aircrew.

The landing zone (LZ) or pickup zone (PZ) must be flat. Any surface undulation will cause the internal frame of the Chinook to bend. This bend will lock the GMV in the helicopter or prevent it from being loaded.

Using procedures developed with 5th Special Forces Group and Task Force 160, the MH-47 can land, hook up the vehicle and load the vehicle crew on the same aircraft. The procedures for working with an MH-47 are different from conventional sling load operations and require coordination and rehearsals.

The Humvee leaves a unique vehicle signature that makes it difficult to conceal its tracks. Take extreme care during route selection. When planning and conducting movement, consider these fundamentals to reduce the chance of enemy observation and contact.

Cover and Concealment

Use terrain features and vegetation that offer protection from enemy observation. When using cover and concealment to its full advantage, a trade-off usually exists between security and speed of movement.

Skylining

Avoid skylining. Select routes that avoid high ground that may silhouette the vehicles against the sky.

Chokepoints

Avoid chokepoints. Chokepoints are areas where the terrain naturally channels or funnels routes into or through narrow passageways. They're often sites for ambushes or areas that the enemy may have under observation. If a chokepoint proves impossible to avoid, then reconnoiter it thoroughly before moving through it.

Populated Areas

Avoid known or suspected populated areas. This means most water holes, because the populace and therefore the enemy know all water holes. A mounted detachment cannot move covertly if people know they are in the area.

Movement Discipline

Practice this extensively. Movement discipline means adhering to your light, noise, litter and interval rules. It also means keeping your speed slow enough so that you do not leave a large dust signature (usually 10 to 12 mph on most surfaces at night, slower during the day).

Security

Maintain 360-degree security at all times to avoid being taken by surprise. The detachment operations officer and/or the unit SOP assign a sector of fire and observation to each vehicle during movement and at halts.

Routes and Contingencies

Make sure all detachment members know the route and contingency plans.

Methods of Travel

There are two methods of travel in the operational area. They are either on existing tracks, trails or roads, or traveling off-road

The ATV section demos cover and concealment. USN

USN

SERTs must arrive at their remain-all-day laager sites about two hours before morning nautical twilight. This allows time for a proper recon of the area and to emplace and camouflage the vehicles before first light. Then troops erase all vehicle signs into the site.

or cross-country. There are advantages and disadvantages to both.

Trails/Tracks

Some advantages are speed of movement; hard-packed trails do not easily yield readable prints and signs of passage; quietness of movement; less stress on vehicles and tires; and navigation is sometimes easier. Disadvantages are usually a greater chance of being seen or compromised; natural lanes of observation and fire exist for your enemy; and mechanical and/or manual ambushes are more probable.

The highly capable American Humvee, the platform used by the GMV, leaves a distinguishing tire trail unlike any other truck. Consider this fact in mission planning.

Cross-Country Operations

Advantages in traveling off-road include less chance of enemy observation or contact; usually more cover and concealment; and less chance of an ambush. Disadvantages are slower rates of movement; more noticeable vehicle tracks and signs of passage; tire failure; greater vehicle stress; and navigation is usually more difficult.

Some terrain is so rough that even the GMV has trouble traversing faster than a man can walk. It is vital that the det rehearse cross-country movement in terrain as close as possible to that of the target area before deployment.

The mounted detachment can employ five movement formations to suit the situation.

Traveling Column

Use this formation when contact is unlikely. Use the visibility rule for interval. Illumination conditions, terrain and vegetation and night vision equipment affect this rule. Drivers #2, #3 and #4 must keep the vehicle the front in sight.

Traveling Overwatch Column

Use this formation when enemy contact is possible but not probable. The driver of the second vehicle increases his interval from the lead vehicle.

This action allows the detachment to use the rule of making contact with the smallest element possible, allowing the remainder of the detachment to fire and move in support of the lead vehicle.

Bounding Overwatch

Use this formation when enemy contact is expected or used in retrograde when the detachment is breaking contact. Each section bounds as a team, never exceeding half of the onboard weapons system range of the section in overwatch, or about 900 to 1,000 meters.

The sections in overwatch provide covering fire for the bounding section. The bounding section should attempt to place itself in a position within the line of sight of the section in overwatch.

Wedge Formation

Use this formation to move through enemy positions by fighting through them when breaking contact is not feasible. This formation can also be used with extremely wide intervals, determined by visibility, to conduct search operations.

Diamond Formation

Use this formation when crossing extremely large open areas. Each section forms a side of the box when moving forward. Visibility determines the interval between vehicles in each section. The interval between sections should not be greater than 900 to 1,000 meters. This formation is hard to control, so the sections plan for and designate rally points before they separate.

Actions at Halts

Any time the SERT det conducts a planned halt, short or long, it will conduct a coordinated shutdown of all vehicles. The commander or operations officer initiates the shutdown using hand and arm signals. He exits his vehicle and stands where he can be seen by all the vehicles.

He then waves his arm in a circle over his head and drops it toward the ground to signal all vehicles to shut down their engines at the same time. He uses the same procedure, when the halt is over, to start their engines at the same time.

If it is not possible for the commander or operations officer to visually signal all the vehicles at the same time, he can use the radio to indicate engine shutdown or engine on.

Use of the radio should be avoided to lessen the detachment's radio signature, but it can be conducted safely if done properly. Once the vehicles have been shut down, the detachment conducts a security listening halt before any other functions take place. The length of time for the halts will be established in planning and/or by detachment SOP.

Short-duration halts are used to communicate with higher headquarters,

make necessary repairs or establish a position fix. For halts of less than 15 minutes, the detachment does not break travel formation. Personnel man all vehicle weapons and establish 360-degree security. For halts of longer than 15 minutes, the detachment, if possible, will move off the direction of travel and establish one of the following positions:

Coil Formation

Use this formation when moving in a column formation or along a road or trail. Move the vehicles into a partial perimeter along the route of movement. Members of each vehicle observe the assigned section of the perimeter. The terrain determines vehicle interval, but it is not usually less than 50 meters. During the halt, perform necessary tasks, brief each member on the present location and issue a contingency plan if contingencies change.

Diamond Formation

Use this formation when moving cross-country or in a wedge/diamond formation. The detachment moves into a perimeter. Members of each vehicle observe one-quarter of the perimeter. The terrain determines vehicle interval, but it is not usually less than 50 meters. During the halt, necessary tasks will be performed, each man is briefed on the present location and a contingency plan is issued if contingencies change.

Laager Sites

Laager sites or "remain all day" (RAD) sites are patrol bases where mounted detachments can maintain their vehicles, rest their crews, plan missions and hide during daylight. There are two types of laager sites: short duration (occupied for only one period of daylight) or long duration (occupied for longer than one period of daylight).

During route planning, select tentative primary and alternate laager sites on the primary and alternate routes. The detachment should arrive in the general areaof the laager sites about two hours before morning nautical twilight. This will allow enough time for a proper recon of the area and to emplace and camouflage the vehicles before first light.

Upon reaching a tentative laager site, or before first light, the ATV element or a dismounted element can reconnoiter it. Once selected, the detachment operations officer and primary navigator enter the site on foot and direct the incoming vehicles into position.

As each vehicle is placed into position, its members are assigned their area of responsibility. After the det is in place, conduct a listening period to determine if there is any activity in the area. Then the following tasks, in order of priority, are performed for safety.

♦Ensure 100% security. Launch a dismounted patrol to erase all vehicle signs into the laager site for a predetermined distance set by the detachment commander.

♦Camouflage vehicles (one per section, the other provides security).

♦Confirm sectors of fire and prepare range cards as necessary.

SERT teams practice stealth and noise control methods to get in, get their mission accomplished—and get back to base camp. Weapons discipline (LT Croce, left) and personal camouflage (BU2 William Rightsell Jr., below) keep an enemy unaware that Seabees are nearby.

♦Establish observation posts (OPs) or listening posts (LPs), if necessary and establish field telephone communications to each vehicle.

♦Reduce security, refuel, perform maintenance and attend to personal hygiene.

The laager site does not necessarily resemble a circle. The terrain and vegetation play a role in locating each vehicle. All four vehicles may be placed in the perimeter if necessary, but normally the detachment commander's vehicle (#2) is located in the center of the laager site. This formation resembles a triangle and allows a superior arc of fire if attacked.

Immediate Action/Reaction Drills

In a worst-case scenario, the detachment will find the enemy at a time and place that is most advantageous to the enemy. To counter this threat, the detachment moves at night using routes that will allow the best chance to remain undetected.

Despite these precautions, the detachment must be prepared should it make contact with the enemy. It prepares itself for contact by keeping the weapons systems manned, keeping vehicle interval and maintaining movement discipline.

The detachment will rely on making contact with its smallest element (one vehicle). This action allows the rest of the detachment to fire and move in support of the lead vehicle. The detachment can increase its ability to avoid compromise by using vehicle-mounted thermal imagers during halts and individual NVGs during movement.

Without stabilizers or gyroscopes, the long-range thermal imagers are normally ineffective during movement. Use infrared (IR) lights only when necessary. More and more countries have acquired infrared (IR or I2) detection capabilities. IR headlights bloom like spotlights when seen by NVGs.

Making contact at night, even under the best of illumination, makes it difficult to determine the number of enemy involved. During unexpected enemy contact, the detachment must break contact and place as much distance between itself and the enemy as the terrain and light conditions allow.

Detachment SOPs and experience will establish immediate action drills (IADs). Generally, the most effective way to break contact is to bound away from the enemy in pairs.

Contact

Normally, the lead or tail vehicle will make contact first. The contacting vehicle will immediately engage the enemy while

the other three vehicles move to the sides in the direction of movement and engage. The contacting vehicle will maneuver in the opposite direction passing through the detachment.

As the contacting vehicle moves past, each vehicle will engage the enemy then maneuver and follow. The last vehicle will continue to engage the enemy, enhancing the break of contact. The last vehicle will also deploy smoke grenades to hinder the enemy's night vision. The tail vehicle may employ pursuit deterrent devices, such as M15 antitank (AT) mines and pursuit deterrent mines (PDMs).

The detachment is not designed to engage in decisive firefights with the enemy. The detachment must use the mobility and speed of the GMV in moving to avoid observation and therefore enemy fire. During all IADs, the detachment will try to recover personnel from a down or disabled vehicle. The vehicle closest to the disabled vehicle will attempt the recovery. The rest of the detachment will maneuver to provide support for the recovery vehicle.

Use secure frequency modulation (FM) communications, with frequency hopping on low power, between vehicles or between mounted and dismounted elements. Such communications will decrease the range of the radio systems used, but they will hinder the enemy's ability to detect and compromise the detachment.

Mounted and dismounted detachments can use short-range, high-frequency (HF) transmissions using International Morse Code or burst devices. These transmissions increase the range of communications but are often difficult to establish or maintain. Again, use codes, maintain brevity and minimize transmissions to prevent enemy detection.

The detachment will need to make long-range communications during its mission. If it must communicate with the FOB at night during movement, it will set up and establish a perimeter and communicate as rapidly as possible. The best time to communicate with the FOB is after the detachment finishes its night movement, establishes a laager site and camouflages all vehicles.

All-Terrain Vehicles

The use of motorcycles and all-terrain vehicles (ATVs) in military applications is not new. With the advent of light forces and mounted reconnaissance teams, they have proved useful as advance scouts for mounted elements. U.S. SOF, British, and Australian SAS employ ATVs in their mobility troops.

The agile ATV provides a mounted detachment with excellent cross-country mobility, virtually only limited by the skill of the Seabee. ATV training is detailed and specialized.

USN

The ATV element provides the detachment with a highly mobile and rapid capability to do route reconnaissance and reconnoiter questionable sections of the intended route. It can perform area reconnaissance of small or large areas rapidly and execute point reconnaissance to locate surveillance sites, laager sites, or communications sites.

ATVs can survey contaminated areas to determine the extent of nuclear, biological and chemical (NBC) contamination and conduct transportation tasks of small amounts of equipment or supplies to distant OPs, LPs, or surveillance sites to emplace caches or moves personnel to com-munications or other sites.

The ATV provides the mounted detachment with excellent cross-country mobility, virtually only limited by the skill of the rider. It is small and easy to camouflage, relatively lightweight and requires only two people to load it onto the trailer. It consumes minimal fuel is extremely quick, outrunning other combat vehicles when necessary.

Some disadvantages exist, of course. The military ATV operator requires complete and detailed training in operating and maintaining this unique and specialized vehicle. This training is extensive and generally much more comprehensive than what is required for a standard civilian or military ATV license. The ATV has a limited range due to its small fuel tanks. The rider is vulnerable to man-made and natural hazards.

The ATV section has two rules that it will never violate: The motorcycle section never operates as a single motorcycle; and when the motorcycle section returns to the detachment, the first task is to refuel the motorcycles and perform PMCS.

The supporting vehicles' crew refuels the ATVs while the riders report to the detachment commander. The riders, however, perform the PMCS. The ATV section deploys ahead of the detachment at a distance determined by terrain and situation. The interval between the ATV section and the main element should be no greater than the signaling distance of the primary signaling device, usually pen flares.

The detachment will establish rally points and rendezvous points with the ATV section before it deploys. The ATV section should never be farther away from the detachment than half the trip capacity of the fuel tanks. Such prevention methods ensure they can make it back to the detachment's last known site.

The ATV section is very vulnerable to small-arms fire. It must use its mobility and speed to distance itself from the enemy if contact is made. If it makes contact with the enemy, the section breaks contact by placing distance and cover between themselves and the enemy. Both riders must be aware of each other. If one ATV goes down, the other must gain position to support the downed rider until he can make his way to either the operational ATV or a covered and concealed position.

At first opportunity, the trail rider must signal the main element that contact is made. He usually uses a pen flare. If the distance between the section and the main element is too great, then he uses a star cluster. The

lead rider must also have signaling devices should the trail rider become a casualty.

The riders make their way, either by motorcycle or on foot, paralleling their back trail until they link up with the main element. The ATV riders should be very adept at controlled ditching, so they can effectively gain the prone position if under a heavy volume of enemy fire.

The motorcycle riders should carry mission-essential and maintenance equipment. There are mandatory items of equipment per rider for the motorcycle section, including:

Individual weapon and LBE, to include ammunition, compass, first aid kit, water, strobe, flashlight, maps and a motorcycle-style, Department of Transportation-approved helmet (not just a Kevlar combat helmet) equipped with headsets and microphones for com-munications Also carried is the AN/PRC-126 or other small radio for emergency contact with main element, pen flares and star clusters.

The motorcycle maintenance kit includes aerosol fix-a-flat sealant, pliers, screwdriver, tire valve core, spoke wrench, chain tightening wrench, spare spark plug, spark plug wrench, crescent wrench, electrical tape, master chain link set and a bug-out bag with food, survival and comfort items.

JOC Kevin Elliott, USNR, was the 2003 Naval Reserve Photographer of the Year.

EO1 Dennis Lang and the NMCB 5 Tactical Movement Team convoy near Baghdad.

USN

Patrolling Falluah With NMCB 5's Tactical Movement Team

STORY BY JO1(SW) SCOTT SUTHERLAND

BAGHDAD, Iraq — A dozen Seabees from Naval Mobile Construction Battalion (NMCB) 5, operating as a tactical movement team (TMT), are supporting the Coalition Provisional Authority (CPA) of the Program Management Office (PMO) in Baghdad.

According to Lt. Brian Lindoerfer, the officer-in-charge of NMCB 5 Detail Southwest Asia I, the team received training and is proficient in navigation, communications, weapons, and convoy operations. The team also has a basic knowledge of Arab culture and language, said Lindoerfer.

"We are filling a critical security role for PMO by supporting their personnel during movements to project site visits and to ministry offices," said Lindoerfer. "We've also conducted some facility assessments of CPA facilities throughout the northern region of Iraq. Our efforts are in direct support of the Iraq Reconstruction Program."

Several members of the battalion's TMT were also part of the unit's Seabee Engineering Reconnaissance Team Five (SERT 5), which helped navigate the way for coalition forces as they made their way into Iraq during Operation Iraqi Freedom last year. SERT 5 performed quick evaluations of field site conditions, usually regarding roads and bridges. Their job was to gather intelligence on their way into Iraq.

For NMCB 5's tactical movement team, their involvement in Iraqi reconstruction is testing their skill and fortitude.

"Travel through Iraq is a challenge," said Lindoerfer. "We continuously monitor and analyze intelligence reports. We do our best to avoid the daily threats from improvised explosive devices, small arms fire, rocket-propelled grenades, mortars and rocket attacks. The team continuously adjusts tactics, techniques and procedures pending the type of movement."

One Navy official who has personally noted NMCB 5's involvement in Iraq is Commodore Mark Handley, a former commanding officer of NMCB 5 who is now assigned to I Marine Expeditionary Force (IMEF) in Iraq.

"They've sought me out to tell me what a great job the Seabees from NMCB 5 are doing," said Handley. "Across the board, they rave about the Battalion's tactical proficiency and professionalism. NMCB 5 has trained a premier team supporting movement for the PMO office. Seabees have earned a tremendous reputation at PMO."

To date, according to Equipment Operator 1st Class Dennis Lang, NMCB 5's TMT completed 45 tactical movements to ministry offices, project site visits and facility assessments encompassing more than 3,000 miles without incident, during a time when travel in Iraq was extremely treacherous.

"We're still doing missions," said Lang, "and we'll continue until we're relieved."

SERT: From the Turret

All over Iraq (and perhaps elsewhere), Seabee Engineer Reconnaissance Teams are sneakin' and peekin' on tasks of all kinds. Go with this Seabee on a mission at combat speed.

STORY BY BU1(SCW/SW) DOUGLAS W. MONTGOMERY, NMCB 74 >>

In homeport, prior to OIF II, we received the orders to deploy to Iraq. At that moment, I felt an instant rush of anxiety and a lot of "what-ifs." This is Iraq from my viewpoint as a gunner with Naval Mobile Construction Battalion (NMCB) 74's Seabee Engineer Reconnaissance Team (SERT).

After extensive training, including essential urban warfare tactics, weapons systems and numerous communication classes, I felt prepared for anything. My team landed in Kuwait near the end of February. About a week after arrival, I was outfitted with all of my necessary gear and was ready for the long journey ahead of me. After three days convoying through the Iraqi desert, we were tired and exhausted, but we made it to Camp Fallujah, Iraq.

During our first week there, we spent a lot of time getting everything set up and organized, then we got the call to go out on a mission with a Marine Corps Recon unit. This was my first SERT mission in Iraq. I will remember it clearly for the rest of my life.

On this trip, our SERT team set out to gather information about designated objectives throughout Fallujah and the surrounding areas. As we approached a hilltop overlooking Western Fallujah, I heard the unmistakable sound of a round

whizzing by. We had a general idea where the sniper was; we just needed to locate him if we could.

I scoured the area with binoculars, but didn't see anything out of the ordinary. Then we got the call to move in closer and go in hot—weapons loaded and ready to fire. At that point, the adrenalin, the anxiety and the intentions were high.

After several minutes, there was still no sign of the sniper. The Marines went door to door while the SERT set security around the perimeter. The sniper apparently had fled.

Of many trips since then, this mission is the most significant to me because I had never been shot at before and I had previously worried about how I would react if it ever happened. Judging myself, I feel I reacted professionally.

Another highly intense time for me was again on mission from Camp Fallujah to one of those famous undisclosed locations. We left around 0700, and about 35 minutes into the trip, Recon 1 (the lead vehicle) reported an Improvised Explosive Device (IED) adjacent to our path.

We jumped on the brakes to stop short of what we thought was the kill zone. Since we were traveling at such a high rate of speed, Recon 1 couldn't exactly gauge where the IED was located, but reported the suspected location of the IED to us in Recon 2, which was the trail vehicle.

I felt somewhat safe, because we believed we were well out of the potential kill zone. We turned the vehicle around and moved closer, keeping out of the kill zone, to see if I could spot the IED.

I spotted four 155-millimeter rounds underneath a concrete barricade, but I couldn't see any type of detonation device because of our position. We returned to our original position—where I suddenly saw another IED about 10 meters from our vehicle. It was made with four 81 mm mortar rounds strapped together with a common red detonation cord branching out to each individual round. I yelled down to my driver, "Get the hell out of here!" The driver complied.

I searched for an IED triggerman as we moved a presumed safe distance away, but there was none to be seen. We went to the area near Recon 1 in order to block traffic and set up security until the Explosive Ordinance Disposal team arrived. Once EOD took over the area, we continued with our mission.

After returning to Camp Fallujah, we conducted a mission debrief. We discussed how we had completed our mission, reviewed any minor mistakes that may have been made and what improvements the team could make for our next trip.

The SERT gunners came up with a trick solution to mark future IEDs we might encounter: Now, depending on whether it's day or night when we go out on missions, we mark IEDs with a water bottle wrapped in yellow caution tape or chem-lites (chemical light sticks).

At the time I write this, the team has successfully completed more than 70 missions. Some took place as close to a few hundred meters from Camp Fallujah, but others as far away as the Syrian border.

Have Humvees, will travel.

I treat each mission as if it was my first. I maintain constant vigilance and never get complacent. Before and after every mission, I ensure my M240B machine gun and the vehicle turret are clean and well oiled. There would be nothing worse than having my weapon fail to fire because I neglected to clean it.

Between missions, the team continues to train and run through many different scenarios in preparation for what we may face in an upcoming mission.

Every day in Iraq, I hear of U.S. or coalition forces being engaged in some sort of attack. It is unsettling, but it also makes me and our team stronger. The action prospects keep me focused, keeps my head on a swivel, observing everything around me.

It's that we never know how or when an attack may come. But our potential opponents also have no idea what they will engage should they attack us. Our training is very good, our motivation is strong—and we *are* Seabees, after all.

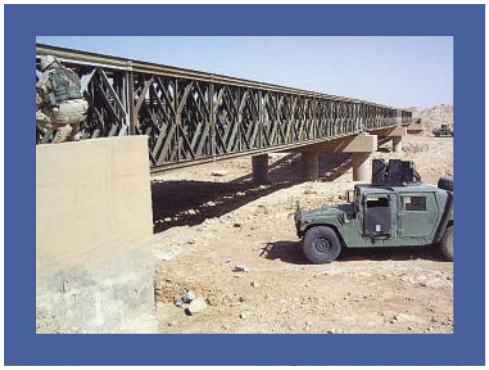

(1) EA2 Oliverdenzil Taylor performs a facility inspection at an old Iraqi chemical maintenance facility. Special attention is paid to ashes on the floor to determine if any valuable documents remain that could be gathered for intelligence. (2) BUC Clinton George and Taylor assess a bridged damaged by explosives outside Al Asad. Security elements of the SERT provide perimeter security. (3) George and Taylor conduct a bridge assessment of the Falawia Pontoon Bridge with a U.S. Marine engineer observing their process. The pontoon bridge had been severely degraded as a result of neglect. The bridge's pontoon anchoring system had failed in several locations, causing the bridge to twist.

the rain & the 'flying teeth'

Very early on the morning of Jan. 29, 2003, I boarded a C-130 Hercules, along with numerous other Seabees, bound for La Ceiba, Honduras. We were the advance party sent to begin construction of a camp that would eventually house approximately 950 Navy, Army and Air Force personnel for Combined/Joint Logistics Over the Shore 2004 (C/JLOTS 04), a training exercise simulating post-hurricane humanitarian assistance to the small Central American nation of Honduras.

STORY AND PHOTOGRAPHS BY
PH1(AW) R.M. ANDRADE

As I looked out a small window of the aircraft, I relished the beauty of the deep blue sea below and the lush green of Honduras as we banked for our final approach at dawn. I was filled with the excitement and anticipation of a thrilling, brand-new experience — this would be my first deployment with the Seabees of Amphibious Construction Battalion (ACB) 2, homeported at NAB Little Creek in Norfolk, and I was looking forward to many new experiences. This trip was supposed to test a full-dress response to a fictional hurricane disaster. But that's when it started raining. For real.


UNITED STATES ARMY

Our first day was spent just unloading the planes that held our supplies of food, including the ever-popular MREs, cases and cases of water, of course, and building materials. At first light we assembled our drive to Puerto Castilla Naval Base. As we convoyed through La Ceiba and into the countryside, I was immediately struck by the stark contrasts—the lush beauty of the land and the poverty of the people. A winding river tumbling over rocks and lined with greenery would paint a peaceful picture if it weren't for the people using it as a bath basin and laundromat. Mountains topped with puffy white clouds and the red-orange glow of sunrise would instill a feeling of majesty and strength if it weren't for the thatch-roofed mud huts lining the road as we drove past.

Arriving in Puerto Castilla, we discovered some of the local camp prep work we had expected to find had not been accomplished. After unloading the convoy and finding our temporary lodging, we began cutting down the tall grass with weed-whackers and a bush hog. Everyone from the Doc, our independent duty corpsman, to our supply guy helped with the grunt work, while the equipment operators and qualified builders deployed the big toys, including a grader, a roller (with and without the sheep's foot) and forklift.

There were a few glitches with the flights carrying some of our building materials and some stuff was delayed, but we made things happen with what we had, augmented by a few small purchases in town.

We had come prepared for the mosquitoes and sun, but no one knew in advance about the small, gnat-like bugs we called "flying teeth." Even our best bug repellant couldn't keep them at bay. Soon we all looked like we had chicken pox from the bug bites. But even this added a bit of Indiana Jones quality to our adventure, and all of this stuff was new to me anyway, so I didn't care.

When the decking material finally arrived on the first of February, we worked until well after dark building the decks for the tents we would soon be living in. At the end of that long, hot day, we enjoyed cool showers, the end of the Super Bowl and a two-beer-limit social. Most just went to bed.

The week went on, with Seabees clearing land, laying out the survey lines and building tents. The Reverse Osmosis Water Purification Unit (ROWPU) arrived and we were hopeful that we would soon have plenty of water. Unhappily, we discovered the high salt content of the sea was more than one ROWPU could handle. Water conservation became imperative, and every day we stressed drinking plenty, but wasting none. Every day brought a new challenge and one day closer to the arrival of the main body.

Feb. 7 began with us moving into our tents at last, building more tents and welcoming the first hundred or so of the main body of troops. Living quarters weren't too bad that first night, but by the next day our tents were getting crowded.

Delays in the arrival of *USS Cape May* (AK 5064), the Seabee supply ship, meant delays in completing the camp. But the personnel were arriving on time nonetheless. Too many people cramped into too small a space is hard enough, but add that to the natural rivalry between Army and Navy types and you've got the potential for disaster. I'm happy to say that disaster didn't strike.

When the Seabee ship arrived, an


tex
Matson
ALL

Seabees were proud to name their Honduran encampment for Navy CAPT Kenneth Butrym, a popular Civil Engineer Corps officer who died unexpectedly of a heart attack in 2003. According to the camp sign, the U.S. Army evidently brought only one soldier to JLOTS-04. Among the tons of equipment unloaded by Seabees were vehicles of all kinds, including vital fuel trucks. The camp (below) took shape quickly and life resumed conventional field rhythms once the torrential rain stopped. The rainy skies quickly gave way first to overcast, permitting Seabee equipment operators to get busy, and then a brutal sun emerged to bake the mud into a solid mass.

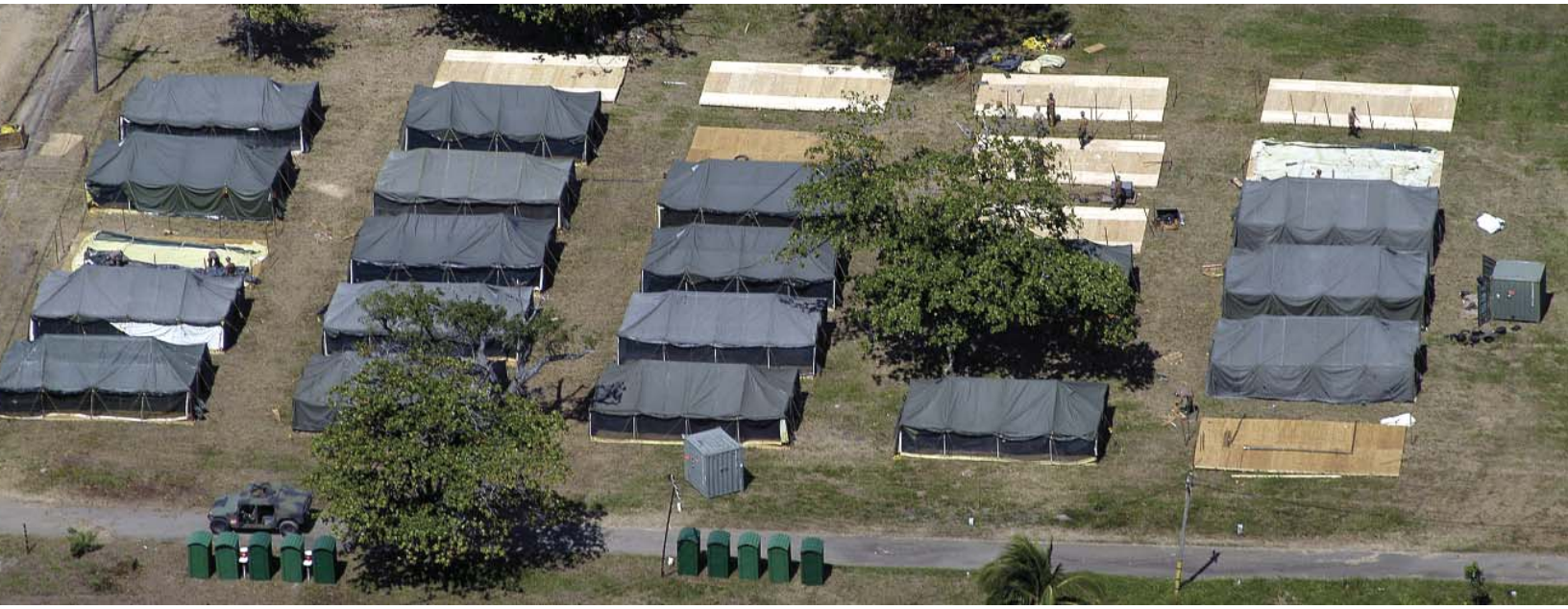



Flora and fauna galore could be found literally everywhere one looked. Below, a wreck-dive opportunity we didn't take advantage of.

inoperative elevator further delayed us. All too often when a question started with "Where is ..." the response was, "It's on the ship." A day later, another hundred or more arrivals occurred and we finally began offloading the ship. The builders became very busy — they even taught the Army troops how to put their own decks and tents together. We soon had tents for almost all, as well as the galley, medical and an armory. Civilization resumed.

The 15th started with the usual bustle of building, but the afternoon was broken up with the most unique change of command most of us had ever seen: CAPT Thomas C. Nicholas relieved CAPT Robert A. Ramsay in the field with the battalion and a few Army personnel in attendance. Dinner that night was intended to be a much bigger event than pizza, but alas, although the galley tents may have been up, the galley itself experienced some start-up teething problems and wasn't quite running. No water was available other than the quart bottles handed out each day with our MREs, but we made do and the change of command dinner was just as collegial.

Feb. 19 was a wet day to be certain—unusual for the beginning of the dry season—and we got 12 inches of rain in 24 hours. To say the flooding was more than we expected doesn't adequately convey the amount of water Seabees had to battle. Even though de-watering pumps ran all night, I woke to lots of water around my tent. I didn't expect that my belongings would be floating by day's end. At least one tent collapsed on its occupants, along with two that had just been put up and hadn't been moved into. Several tents were flooded out completely and most saw at least partial flooding. Some areas of the camp were knee-deep in water.

After only two days of the galley running, we were back to a diet of MREs. The scullery and galley prep tents were flooded. The ACBees in the diver contingent, however, jumped at

the opportunity to get in some good surf training. They certainly looked like they were enjoying themselves.

Two days later, with pumps and hoses crawling all over camp, the mud and a few ponds still lingered but many areas were beginning to dry out. Work continued and life made a turn toward relative normalcy.

A virtual flotilla of exercise ships drove in, including *USS Flickertail State*, *USS Cape Trinity* and *USS Mount Washington*. More off-loading and hustling of cargo ensued.

Numerous Navy, civilian and local Honduran VIPs came and toured more than once, including, on one day, the American Ambassador to Honduras, The Hon. Larry L. Palmer, who flew in with RADM James M. McGarrah, deputy commander of contingency engineering and deputy chief of civil engineers, and a large cadre of Honduran military chiefs—with more starred cammie collars than I've ever seen in one place. (The Honduran military rank structure uses stars at the 0-4 level, where ours start a bit higher up.)

As I sat in on the briefing for all those dignitaries, I was amazed to discover just how much history we were making out here on this trip.

For example, never before this exercise have a roll on-roll off and load on-load off ships combined in service the way it was donehere.

While Army and Navy divers directed the process of launching the SALM, I thought about all that had been accomplished in this history-making event. I was filled with pride to have been even a small part of it.

I was proud of everyone in uniform who does things we don't think of as being extraordinary or "history-making." Then I paused for a moment and quietly thanked all my shipmates—past, present and future—for their seemingly ordinary, yet very extraordinary days.

The Seabee *Can Do!* motto shone brightly through C/JOTS-04, in spite of late equipment, a broken elevator, flooding—and daily battle with the "flying teeth" bugs.

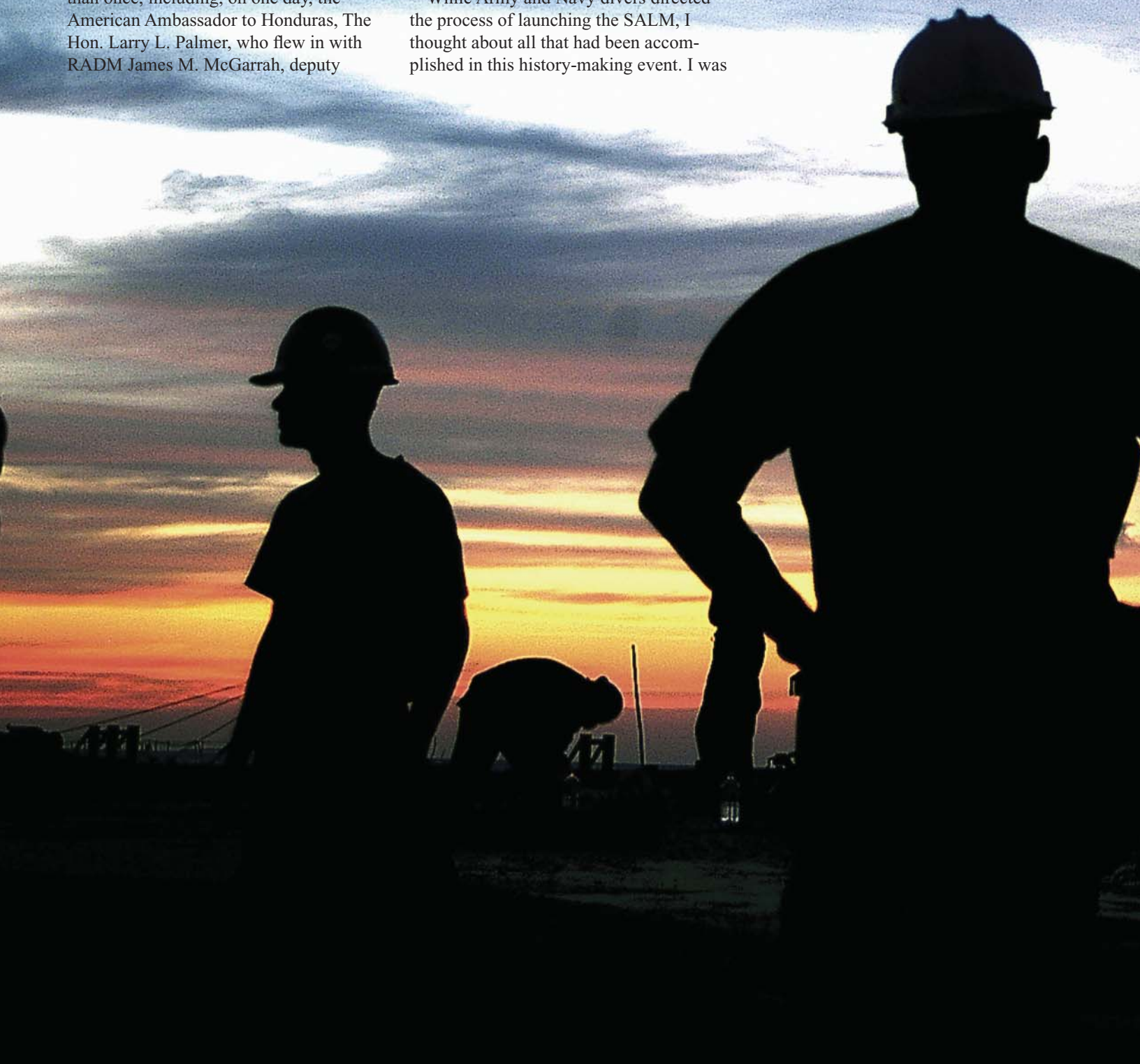

UNDERWATER CONSTRUCTION SEABEE STYLE

A Brief History of the Underwater Construction Teams

STORY BY CAPT DAVE BALK, CEC

Seabees of the Naval Construction Force (NCF) became involved and famous in construction diving during World War II, in conjunction with the building of numerous advanced bases throughout the Pacific theater. Early projects included underwater demolition of reef obstructions, and in-shore construction necessary for development of channels, harbors, and mooring facilities for the fleet. Most of the work was performed by specially trained Seabees, qualified as divers, assigned to the Naval Mobile Construction Battalions (NMCBs).

During the same period, several small, semi-independent units were being formed to perform combat underwater demolition, limited salvage, and underwater construction. These units were the predecessors of the Underwater Demolition Teams (UDTs), which originally included diver-trained Seabees who were led by Civil Engineer Corps Officers.

The mid-1960s saw renewed interest in ocean engineering and ocean facilities, prompting the report "Plan for Definition of Naval Facilities Engineering Command (NAVFAC) and Naval Construction Force (Seabee) role in Ocean Engineering (NAVFAC Summary Report 68-1)", published in September '68. It identified the necessity for a military underwater construction capability and recommended that one Seabee Underwater Construction Team (UCT) be located at each of the two construction battalion centers.

In 1969, a UCT was established under the 21st Naval Construction Regiment (NCR) then homeported at Davisville, R.I. It was later moved to its current homeport of Little Creek, Va. A UCT was also established then in the 31st NCR at Port Hueneme, Calif., but not manned with enlisted Seabee divers until 1971.

In February '69, a team of approximately 20 Seabee divers was assembled from the 21st NCR and individuals serving with the NMCBs to provide underwater construction support for the experimental TEKTITE I undersea habitat, launched in 52 feet of Caribbean sea water near St. John in the U.S. Virgin Islands.

The Seabee diving team was operationally attached to Amphibious Construction Battalion (ACB) 2, which also provided a causeway team and camp support personnel. Due to the ingenuity of the Seabees, installation of the 160-ton TEKTITE I undersea habitat was accomplished without the use of a floating crane. Instead, the Seabees configured an "underwater elevator" lifting system assembled from locally available Ammi pontoon sections.

The second large-scale project was the construction operation on the test-array installation of the Azores Fixed Acoustic Range (AFAR). It began in 1,300 feet of sea water (fsw) in March '70 at the Atlantic Undersea Test and Evaluation Center, Andros, Bahamas. This project was accomplished by the newly formed unit at the 21st NCR; the unit was unofficially being called UCT 1 at the time, but it deployed as 21st NCR Detachment Yankee.

The AFAR project required underwater explosive demolition to produce a trench through the precipitous basalt submarine island shelf, followed by installation of 1,500 feet of split pipe to each of four large, double-armored power and signal cables. Seabee divers devised an innovative procedure for application of the split pipe (which weighs 60 pounds per three-foot section), by under-running the cable with a causeway section and applying the split pipe on deck. This method greatly expedited -- by a factor of 15 -- the industry standard of applying the split pipe with cable in place on the ocean bottom.

During the Vietnam War, diving Seabees served with the NMCBs deploying to Southeast Asia. Their primary tasks included repair of war-damaged waterfront facilities and construction of new bridges, piers, and POL (petroleum, oils and lubricants) facilities. Often the only diving personnel available, they also performed small-boat salvage operations and security inspection swims on bridges, piers and underwater fuel lines.

In 1970, the Chief of Naval Operations (CNO) authorized the consolidation of Seabee diving resources from the NMCBs into two units attached to the NCRs. The

mission of the new underwater construction detachments vested in the NCF detachments the responsibility for Navy ocean facilities engineering, construction and repair of underwater facilities. The naming of these new units caused quite bit of controversy, and various names were batted around, including such memorable candidates as FUSE DET (Facilities UnderSea Engineering Detachment); SEA CON TEAM (SEabee Aquanautical CONstruction Team); CONFUSED (CONstruction Force UnderSea Engineering Detachment); USMC TEAM (UnderSea Maintenance and Construction Team); SOFT (Seabee Ocean Floor Teams); and SUC (Seabee Underwater Construction). Eventually, it was settled that UCT (Underwater Construction Team) was still the best name for these new units.

By 1971, UCT divers were assisting in the building of the famous naval installation at Diego Garcia, British Indian Ocean Territory.

Seabee divers performed a variety of harbor maintenance and construction services, including mooring and underwater connection of fuel and cement transfer lines ashore; inspection and repair of the underwater pipelines; recovery of equipment dropped overboard during supply ship cargo transfer operations; inspection and repair of all channel marker and fleet mooring buoys; and repair of the offshore sewage out-falls. Seabee divers at Diego Garcia also performed all subsurface maintenance on the desalination barge which required blasting a new trench for barge mooring at the industrial "I" site.

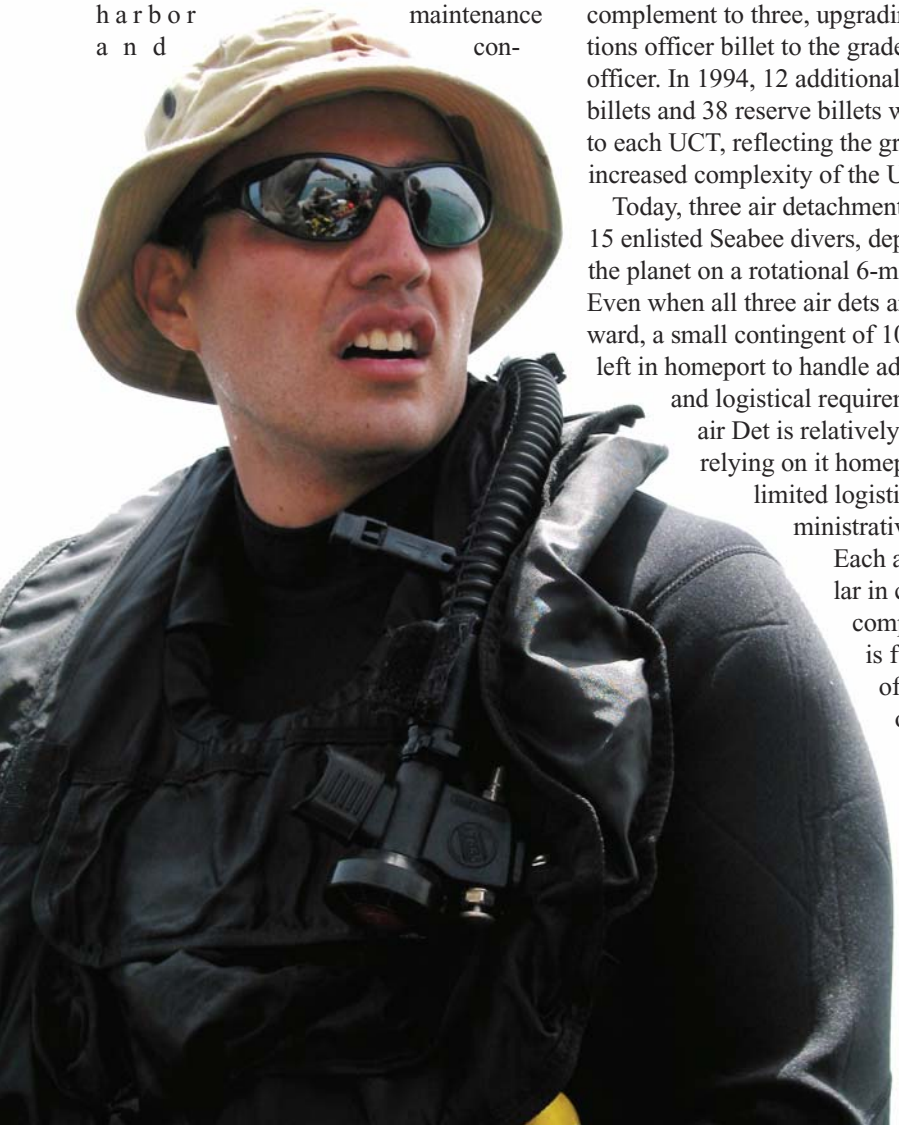

The early teams were composed of 12 to 15 Seabee divers, with additional divers and support personnel assigned for temporary duty from the NMCBs as needs required. With a growing workload and complexity of projects, team manning grew to approximately 28 enlisted and two CEC officers, plus a permanent shore duty component of four enlisted.

The manpower initiative for 1983 increased the sea component by 68 percent, to 41 enlisted, and increased the officer complement to three, upgrading the operations officer billet to the grade of warrant officer. In 1994, 12 additional enlisted billets and 38 reserve billets will be added to each UCT, reflecting the growth and increased complexity of the UCT mission.

Today, three air detachments, each with 15 enlisted Seabee divers, deploy across the planet on a rotational 6-month basis. Even when all three air dets are surged forward, a small contingent of 10 enlisted is left in homeport to handle administrative and logistical requirements. The air Det is relatively independent, relying on it homeport only for limited logistical and administrative support.

Each air det is similar in capability and composition, and is fully capable of carrying out each of the teams' mission areas. This includes such varied tasks as pier and cable inspections; repairs to piers, pilings and cables, maintenance and construction of underwater discharge out-falls, plus playing a critical part in every amphibious evolution and exercise.

A deployment with a UCT is a little unusual compared to the rest of the NCF. First, each team is attached to a particular fleet. UCT 1 operates in the Atlantic Fleet area of operations, while UCT 2 operates in the Pacific Fleet AO.

Within the fleets, both UCTs have and regularly exercise the capability to perform self-sustaining diving operations in the Arctic, Antarctic and all points between ("The New Cold Warriors," Summer 2002).

Their work is often to directly support an operational system, such as installing the Offshore Petroleum Discharge System and the Elevated Causeway System/Modular ("The ELCAS Modular Solution," Double Issue 2003); harbor recovery so ships can berth and offload; and sea floor construction to ensure the 50,000 miles of offshore cables stay where they belong.

The work is reliant on such variable factors as storm surges and ship movements (both to avoid them and to ride them). They spend quite a bit of time at sea and, of course, under it.

Although the deployment cycle is extremely busy for air dets and the shore duty contingent, homeport is not a time to put your feet up. The UCTs deploy with their complete Table of Allowance (TOA), so homeport is a period to make repairs to Civil Engineer Support Equipment (CESE), inventory the equipment and restock materials.

The UCTs celebrated their 30th anniversary last February. Original plankowners and current Underwater Construction Technicians met to share experiences and tell stories (some of the stories were even based on actual events …). It was inspiring to witness the long line of accomplishments of the young but extremely productive UCTs.

Today, the Underwater Construction Teams are composed of only about 67 members, including three officers and 64 enlisted, of which 57 are qualified as Navy Deep Sea Divers.

Enlisted Seabees and CEC officers interested in learning how to join this extremely elite group of specialists should point their Web browsers to http://nofp.nfesc.navy.mil, or send e-mail to the director of Navy Ocean Facilities Program at dirofp@nfesc.navy.mil.

We'll leave our work light on for you.


VIKING

On April 29, 2004, as a service and tribute to members of the World War II generation, the National World War II Memorial opened for public viewing. Exactly one month later, on May 29, the memorial was formally dedicated with a parade and a gala dedication ceremony. It's the first national memorial dedicated to all who served during the Second World War. The memorial honors the 16 million who served in the armed forces of the U.S. during World War II, the more than 400,000 who died and the millions who supported the war effort from home. Symbolic of the defining event of the 20th Century, the memorial is a monument to the spirit, sacrifice, and commitment of the American people. Symbolic of commitment of their own, Seabees from Construction Battalion Units (CBU) 422, homeported at Naval Station Anacostia Annex in Washington, D.C., and 403 from Annapolis, Md., hosted and transported Seabee vets from the National Seabee Veterans Association (NSVA) in the memorial dedication parade.

Memorial Weekend 2004

Construction Battalion Units 422 and 403 showed *'Can Do!'* attitude and helped represent the Navy in the dedication of the stunning World War II Memorial in Washington, D.C.—and they brought along former Bees of the National Seabee Veterans Association to help them do it.


ATLANTIC
VERMONT
NORTH CAROLINA
VIRGINIA
SOUTH CAROLINA
MASSACHUSETTS

©R LATOFF 04

Seabee Shoot-X

SEABEE RESERVE BATTALION NMCB 22 WENT TO TEXAS TO SHARPEN KEY WEAPONS SKILLS AND PASS THEM ALONG TO SEA CADETS. STORY & PHOTOGRAPHS BY JO2 LESLIE A. SHIVELY

Chilled to the bone and slogging around in five inches of mud, 80 members of Naval Mobile Construction Battalion (NMCB) 22 spent four rainy March days and nights in the field at Camp Bullis, Texas, perfecting weapons skills and teaching the next generation.

"This was probably the worst weather we've ever had," said Equipment Operator 1st Class David Hernandez, the San Antonio Detachment 05 assistant officer in charge. Hernandez has participated in the annual weapons qualification exercise for the past 16 years. "They didn't complain and they got the job done."

Unfazed by the sodden conditions, battalion members who attended from the Texas detachments of San Antonio, Corpus Christi and Harlingen qualified as marksmen, with 11 receiving Expert medals and 15 receiving Sharpshooter ribbons on the M16. Of the 21 members who fired the 9mm pistol, two qualified for Expert certification and five received Sharpshooter ribbons.

The M16 was fired from the prone, sitting and standing positions at 200 yards. The 9mm pistol was fired from the standing position at 25 yards.

"We had 14 relays of 10 people each on the M16," said Engineering Aid 1st Class Ruben Garcia, in charge of Det. 05's operations and projects. He was responsible for planning the evolution. He said four days of practice were key to scoring well.

"The people who didn't qualify got a chance to shoot again and they got more familiar with the weapon," Garcia said, adding that the rain evidently had little affect on the Seabees' abilities to shoot.

At a time when Reserve Seabee battalions are being called up to supplement their active duty counterparts, refreshing the Reservists' military skills is more important than ever. NMCB 14, for example, a mobilized Reserve Seabee Battalion headquartered in Jacksonville, Fla., is scheduled to be replaced by NMCB 23, headquartered at Ft. Belvoir, Va. The use of Reserve assets is a key element to successful mission accomplishment in the Seabee continuum.

"Weapons quals are a big part of our source rating. It's important because, at the drop of the hat, we could be mobilized. We have to be ready," explained Senior Chief Builder Clarence Denis, NMCB 22 Det. 05's officer in charge.

Denis credited the firing range line coaches for the successful exercise.

"A good line coach is somebody who is patient and carefully observes the students. A lot of first-time shooters are nervous," said EO2 Brian Vierling, one of the coaches who assisted on the firing range. Vierling explained that breathing properly and staying calm are the most important characteristics for achieving high scores with any weapon.

The Seabee detachment also set aside time during the evolution to coach the San Antonio-based U.S. Naval Sea Cadet Corps, Alamo Battalion, during a first-time experience firing live rounds with an M16.

The Sea Cadet program prepares students 14-18 years old for a career in the sea services. Sea Cadets attend two one-week boot camps then train in career-related areas, such as aviation or healthcare. Graduating Sea Cadets enter Navy boot camp with the rank of Seaman.

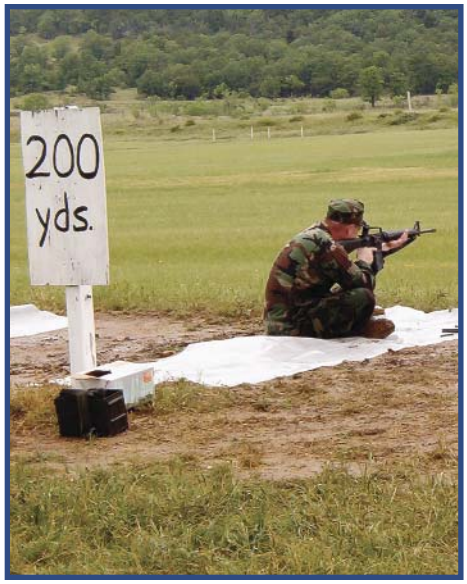

As do active duty and Reserve Seabees, the Sea Cadets also must complete a familiarization and safety course with the M16 prior to firing the weapon.

"This was a good experience," said Samuel Knapick, a high school student with two years in the Sea Cadets. "I want to do my part for my country. I want to make my family proud. I want to become a SEAL and this is going to help me in my later years in the Navy."

Alexandria Gloria, a high school freshman who has also spent two years as a Sea Cadet program, felt exhilarated after firing the M16 for the first time.

"I've never shot anything, so that jolt and seeing how close you were to your target, or how far off, was just fun. We're provided with so many opportunities to do different things [with the Sea Cadets], but normally I wouldn't get to shoot an M16." Although nervous at first, Gloria became comfortable with the weapon after firing it several times. She looks forward to additional Navy experiences. "[Sea Cadets] gives me a hands-on experience. I learn responsibility and teamwork—skills you need for life."

"It's awesome," said Construction Electrician 2nd Class David Martinez, who coached the Sea Cadets. "You're not only teaching them how to properly use a weapon, you see them acting as adults, taking responsibility and planning their future. We teach them the same way we teach the Seabees."

Construction Mechanic 1st Class John Carleton, whose daughter Shelby has been a Sea Cadet for nine years, supports the program as a Seabee and as a father. "Most of the kids here could be home, sleeping until noon or watching cartoons, but they choose to come out here because they want to accomplish something.

"These are the kids who will do something later in life."

Utilitiesman 3rd Class Eric Rios (below, right), from San Antonio, Texas, demonstrates disassembly of an M2HB Browning .50 caliber machine gun for his shipmates from NMCB 22. He is using the drive rod spring to bring back the retracting slide handle in order for the bolt, buffer body and extention to be removed. Rios and the class wrere practicing timing drills so that they could disassemble and then reassemble the weapon in under three minutes.

Seabee Days 2004

18th Annual Seabee Days shares Seabee heritage with its community

STORY BY JO1 LYNN KIRBY
PHOTOGRAPHS BY PHAN JOHN P. CURTIS

THE PACIFIC SEABEES WELCOMED more than 38,000 guests to their Port Hueneme, Calif., homeport July 17-18, for the 18th Annual Seabee Days.

It kicked off with a troop formation of 800 Seabees and a military parade, complete with an E2-C "Hawkeye" flyover and the firing of two crew-served weapons mounted on Humvees. A Browning M-2 heavy machine gun fired 125 rounds of .50 caliber blank ammunition, and an M-60 machine gun fired 200 rounds of 7.62 caliber blank ammunition.

Navy Capt. Steve M. Wirsching offered opening remarks for this popular Seabee extravaganza. "Seabee Days is an opportunity for us to showcase our construction equipment and weapons, and examples of the expeditionary facilities we construct," he said. And it did just that for thousands of fascinated attendees.

From a bridge to a watchtower, a forklift to a bulldozer, the Seabees had exhibits of the facilities they build and the equipment they operate to build them. In addition to the Seabee exhibits, *USS Stethem* (DDG 63) was in port for public tours.

Stethem is special to Seabees, as it commemorates Seabee Steelworker 2nd Class Robert Stethem. He was killed by terrorists in 1985 aboard a hijacked TWA flight. Stethem was posthumously awarded the Purple Heart and Bronze Star medals. *Stethem* is the only active ship named after a Seabee.

Bees from NMCB 40 proudly marched in the Seabee Days parade (top). A Seabee diver plays submerged tic-tac-toe (above). NAVFAC, arriving (left).

"I want to thank you, our great Ventura County community," said Rear Adm. Mike Loose, Commander, Naval Facilities Engineering Command and Chief of Civil Engineers. "Over the years, you have relentlessly supported us. We would not be successful if it were not for your exceptional and extraordinary support. We are so proud to call Port Hueneme our home and the Home of the Pacific Seabees."

EA2 Brandon Hill (right), from Naval Mobile Construction Battalion 40, demonstrates a M240B machine gun in an attention-getting firepower exhibition at the opening ceremony for Port Heueneme's annual Seabee Days festival. CAPT Steven Wirsching, Commander 31st Seabee Readiness Group (below) presents retired Navy CAPT Otis Hinkle with a plaque for being the 2004 Seabee Days Honoree, recognizing his contributions to the Seabees since his retirement. Thousands of Port Hueneme's local citizens (bottom) streamed onto Naval Base Ventura County to see first-hand what their Seabees are capable of doing around the world on a daily basis. Seabees demonstrated and explained their array of construction equipment, methods and missions to fascinated spectators that included many Seabee veterans, retirees and Reservists.

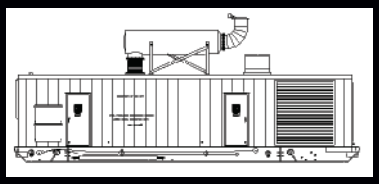

Get in touch with your

MUSE

It's just a box, right? A Seabee generator is just a Big Box with gauges and switches, right? Well, no, it isn't. Only Seabee graduates of the **M**obile **U**tilities **S**upport **E**quipment program operate the Big Boxes. They are some of the most elite, best paid and flat-out smartest Seabees on the planet. Here's how to join them.

If you are looking for a career in the electrical power industry, or just want greater challenges in your current Navy job, investigate the Mobile Utilities Support Equipment (MUSE) program. MUSE technicians generally enjoy rapid advancement, Selective Re-enlistment Bonuses, the security of closed-loop detailing—and exceptional civilian employment opportunities after leaving the Navy.

The MUSE mission is to provide responsive, reliable and cost effective utilities support equipment—power plants, steam plants, electrical substations—and technical assistance for Navy and Dept. of Defense utilities deficiencies worldwide. This special program offers well-qualified Seabees unparalleled, highly sophisticated technical training, skills and valuable, hands-on experience in the fields of power generation and utilities.

If you have never heard of the MUSE program before now, you can be forgiven. MUSE is a small, highly selective and tightly controlled group of Seabee power generation experts who circulate only among a handful of MUSE-specific billets in the U.S. and at certain places around the globe.

Mission support areas include fleet support, cold-iron support for ship repair, maintenance and shore power, contingencies and expeditionary events. MUSE generators can be deployed in cases of shore facility utility plant failures or breakdowns and scheduled overhaul periods, not to mention providing power during or after storms or natural disasters.

The MUSE equipment is designed to be self-contained, readily transportable and easily adaptable to any situation. MUSE power units are reliable and maintainable power/steam stations at remote locations. They are often uniquely designed and procured by MUSE Engineering Division to meet specific mission demands. Cradle-to-grave power-unit engineering includes upgrades for the technology and improving reliability. Some power units are designed around specific customer needs.

MUSE program personnel are recruited from the corps of active-duty Seabees, primarily those within the Naval Construction Force (NCF). The exhaustive, MUSE selection process (which is fully detailed in MILPERSMAN 15909C, Ch. 9.23) defines these pre-requisites:

1. Be in grades E4-E6 in any Seabee rating;
2. Score an ASVAB AR+WK greater than 110, AFQT greater than 60;
3. Have 2 to 12 years of active duty with no NJP in the previous three years;
4. Show greater than 3.0 Eval marks;
5. Comply with PRT guidelines;
6. Have Command endorsement;
7. Be Seabee Combat Warfare (SCW) qualified;
8. Demonstrate a verifiable algebra/geometry/trigonometry background;
9. Agree to obligate service of five years upon course start.

Successful applicants will get PCS orders (accompanied, as situations demand) to very challenging training. The entry-level training evolution begins with the rigorous 48-week Prime Power Production Specialist Course at Fort Belvoir, Va., and assignment to the closed-loop NEC 5633.

Included in the curriculum is 17 weeks of academic training with comprehensive college-level coursework in math, physics, electrical and mechanical engineering. It's followed by the 13-week Operator Course, teaching hands-on operation, maintenance and trouble-shooting of diesel power plants, steam systems and substation systems.

Specialty Training occurs over the next 18 weeks. Based upon program requirements and previous training, students may enter a track for either electrical or mechanical subspecialty phases.

Graduates can receive college and ACE credits and will typically qualify for the Selective Re-enlistment Bonus (SRB). MUSE grads are subject to obtaining prized civilian licenses and technical certifications that can result in very attractive employment offers once Seabee active duty days are done.

The community is small, close-knit and distinguished by rapid advancement, but make no mistake: *this is a demanding course*. Experience over a number of years has shown that some selectees, while intelligent enough, just don't maintain the drive and self-discipline to finish the MUSE training. You must

Above, MUSE student CE1 Joshua Klaas and a 1300 kW power plant; below, panel practice and the MUSE installation at Rota, Spain.

be determined to get through this, because in addition to the typical 40 hours of classroom time, the course requires about 30 more hours of homework each week.

On graduation, MUSE students head to Port Hueneme to complete 18 weeks of training in the MUSE Familiarization Course, as well as other in-house, military or vendor training as may be required.

The sea duty and shore duty components of MUSE are located in Port Hueneme. Sea duty is composed of teams that travel around the world installing, inspecting and terminating electrical equipment. Shore duty is composed of teams preparing equipment for shipment or inspecting and repairing equipment returning from deployment. Both areas offer great opportunities to become an expert in the field of power generation.

The NEC 5633 billet distribution breaks down in this general configuration (subject to change, of course, at all times). There are 31 MUSE billets at Port Hueneme: 14 shore duty slots in the Equipment Readiness Division, admin, supply and engineering, with another 14 sea duty billets in field operations and three non-NEC support billets.

Elsewhere, there are 10 satellite billet locations, including MUSE instructor duty at Fort Belvoir. Other billets reside with Naval Support Activity, La Maddalena, Italy; Naval Computer and Telecommunications Area Master Station (NCTAMS) Naples, Italy and NCTAMS Atsugi, Japan; with the Naval Security Group, Souda Bay, Crete; and White House Staff duty in Washington, D.C. Other billets may be added at Dahlgren, Va., in Singapore and in Guam.

MUSE technicians are specialized Seabees recognized as utilities subject-matter experts, regardless of actual rank. They provide engineered and technical solutions to complex utilities problems and install, trouble-shoot and repair MUSE gear all over the world. Senior technicians are directly responsible for the management, design and contract procurement of MUSE equipment.

Get more information and talk to MUSE program people by calling (805) 982-5323 (DSN 551-5323), or send e-mail to museweb@cbchue.navfac.navy.mil.

For lots of details we don't have room for here, point your Web browser to www.nfelc.navfac.navy.mil/muse.

CE2 Joseph Wedlich, from Clifton Park, N.Y., instructs students from the Iraqi Construction Apprentice Program on how to use a hydraulic crimping tool to put terminal ends on wire.

Iraqi National Guard gets reliable power thanks to Seabees

STORY AND PHOTOGRAPH BY
BU2 JEROME KIRKLAND

The Iraqi National Guard (ING) have reliable power at their training facility thanks to the Seabees of Naval Mobile Construction Battalion (NMCB) 14 and the students of the Iraqi Construction Apprentice Program (ICAP).

Seabees have replaced several small generators, some of them inoperative, with two giant 275 kilowatt units.

The installation included more than 1000 meters of special wire that had to be buried between buildings and under roads, plus power distribution boxes to connect the generators to the existing interior wiring.

"This equipment uses a simpler design and is more reliable then the old [generators]," said CECS John Bonaccorso, from Orlando, Fla.

With the new generators, the Iraqi National Guard (ING) now has more reliable electricity that will not be affected by the frequent blackouts and power shortages that local power companies encounter.

The Seabees electricians from NMCB 14's Bravo Company took advantage of the opportunity provided by the generator installation to teach generator installation and maintenance basics to Iraqi students enrolled in the ICAP program.

NMCB 14 is a Reserve Seabee Battalion headquartered in Jacksonville, Fla.

MUSE gear is often deployed pierside to power up ships, as here with the hospital ship USNS Comfort (AH-20). >>

NMCB 14 Reserve Seabees (left) were awarded Purple Heart Medals during ceremonies attended by more than 375 family, friends and co-workers. Below, Construction Mechanic 3rd Class Odis Reyes, of Jacksonville, Fla., is awarded a Purple Heart medal by Commander, Naval Reserve Force, Vice Adm. John Cotton, assisted by Petty Officer Reyes' daughter. Reyes received his medal for shrapnel injuries in his left leg and lower extremities during an attack on his Seabee compound in Fallujah, Iraq.

Back for a time: Some Desert Bees from NMCB 14 get a break & Purple Hearts

STORY BY JO2 JENNIFER VALDIVIA
PHOTOGRAPHY BY PH3 CLARCK DESIRE

Savoring a break from the action was never sweeter than that enjoyed in July by some mobilized Reserve Seabees back for a while from Iraq.

Sixteen Reserve Bees from Naval Mobile Construction Battalion (NMCB) 14 received the Purple Heart Medal July 11 from Vice Adm. John G. Cotton, commander, Naval Reserve Force, in a ceremony before 375 family, friends, shipmates and a big media contingent at Naval Air Station Jacksonville.

The 16 Seabees, along with four more Seabees from NMCB 14, had been wounded in attacks April 30 and May 2 while mobilized to Iraq in support of *Operation Iraqi Freedom*. Another four remain hospitalized and have already received their Purple Heart Medals. Seven NMCB 14 Sailors were killed during the same attacks [see page 8. —*Ed.*].

The Jacksonville-based battalion was serving in a humanitarian capacity in Iraq by helping to rebuild and improve infrastructure and schools, restore water and electrical power, and repair sewage systems.

"Thank goodness we have people like these great Americans who put their lives on hold to go and fight," Cotton said. "The men and women of NMCB 14, and especially those who are sitting here wounded today, I salute you for the service you have given to our great country."

One of the Seabees, Construction Mechanic 3rd Class Odis Reyes of Jacksonville, received shrapnel injuries in his left leg and lower extremities during the attack. His daughter, Jasmine, 10, helped pinn a Purple Heart Medal on his desert camouflage uniform.

"I'm very proud of my father," said Jasmine, "and I love him very much."

"I was over there for my daughter [and] for all the other children," Reyes said.

Reyes praised the quick reactions of the many Seabees, corpsmen and other individuals who helped the injured right after the attack.

"The corpsmen reacted professionally and quickly, saving many lives," Reyes said.

Some NMCB 14 Seabees are trying to go back to Iraq to re join their shipmates.

The Naval Reserve — No more 'us' vs. 'them'

BY FLTCM(SW/AW) "BUCK" HEFFERNAN

For most of my career, I have had irregular contact with the Sailors in our Naval Reserve. I always knew we had a Reserve force, but I never really knew how many Reservists there were, or the extent to which they were used. All I really knew is that if any ever showed up at a command to which I was attached, it usually meant added work for one of my active duty Sailors. What's more, if I ever had a need that couldn't be filled by my active duty Sailors, there never seemed to be a good way to get a Reservist to fill in.

Today, happily, I'm here to tell you all that has changed—and changed fast.

Earlier this year during testimony before Congress, the Secretary of the Navy Gordon England said, "The Navy is transforming the Naval Reserve so that it is fully integrated with active forces. Reservists are shifting away from thinking of 'Naval Reserve requirements' to 'Navy requirements'—a shift that includes goals, capabilities, and equipment. The Navy mission is the Naval Reserve mission. One Navy, One Team is the message."

That is a very important statement. What's more, it's the defining statement on breaking down a culture in our Navy where active duty Sailors saw their relationship with Reserve counterparts in simple terms of black and white—it was 'us' and 'them.' The Reserve always seemed to be an afterthought.

The Chief of Naval Operations' "Top 5" lists integration as one of the most important things today's leadership must focus on. Integration means we have a Reserve that complements the active duty force. It means that in the not-too-distant future, active duty and Reserve will train the same, work the same, talk the same and provide equal quality of service to our Navy.

Because U.S. Fleet Forces Command (FFC) is tasked with integrating our active and Reserve force, I see a lot of information on the process. The first step to integration was to conduct a comprehensive review of what requirements are needed of our Reserve force. That review started almost a year ago and is nearly complete. Each active duty command was asked to provide FFC data on what support their Reserve counterparts were providing that works, what was not working, and what, in a perfect world, would be the ideal support reserves could provide their command. The information gathered in that zero-based review will dictate the size and capability of our future Reserve force. In case you were unaware, the current Naval Reserve numbers about 85,900 people; that number includes about 14,000 Full Time Support (FTS) personnel and more than 71,000 Selected Reservists. Congress mandates the total end-strength; input from the CNO drives their decisions.

Similar to the above process, joint billets and capabilities will be looked at next. It's not surprising that in today's ever-increasing joint world, the need for joint billets has increased. The end result of the zero-based review will most likely spell a decline in some communities and a growth in others.

Some have asked, given we are at war, if the timing of this review is smart. The answer is yes—it's not only smart, it's brilliant. Operations *Enduring Freedom* and *Iraqi Freedom*, and the overall war on terrorism at large, have illustrated some interesting facts in how we employ our Reserve. Now is a perfect time to fix some things that have been out of alignment for decades.

The Reserve as we know it was created to respond to a large-scale call up during the Cold War. Today's requirements are much more defined, and limited in scope, and we will fully employ all our Reserve personnel, not just a fraction of them. What's more, we will crack the code on how to get them when we need them. All the talent in the world means nothing if you can't get it when you need it.

Since *OEF*, the Navy has mobilized about 22,000 Reservists. But that doesn't incorporate the thousands of other Reservists who are, on orders, supporting the war on terrorism but not actually mobilized. Many incorrectly use the common term "mobilization" as the only gauge of how useful our Reserve force at a given moment in time. Today's challenge to active duty commands is to capture the total need for our Reserve on a routine basis, here at home and deployed to areas far from home.

One of the largest challenges in the zero-based review was to get active duty leadership to completely and accurately focus on what Reservists can contribute, as well as what they may need help with. Honesty was paramount to this task. Because the Navy will reduce its numbers, the need to correctly identify strengths and weaknesses has never been greater. Wherever active duty has a shortfall, that's where we need to employ our Reserve. It's also where we need to concentrate our training efforts. The plan to do this is progressing nicely and we're well on our way to being one Navy.

There are sweeping changes taking place and this can only be interpreted as an exciting time for our Reservists. It's also a time for a culture shift amongst active duty people.

Guest columnist Buck Heffernan is the Fleet Master Chief Petty Officer for Fleet Forces Command.

// KUBIC SENDS //

C. R. KUBIC
Rear Admiral, CEC, USN
Commander, 1NCD/NCFC/I MEG

Last fall, we published a Special Commemorative Double Issue of *SEABEE* Magazine to memorialize all the great things Seabees did in the campaigns in Afghanistan, Iraq, and elsewhere. As this issue goes to press, I have again been in Southwest Asia with deployed Seabees, active and reserve, as we continue to do our part to promote global stability and security.

Throughout history, the role of combat construction has often been pivotal in the course of armed conflict, but it has never been of greater importance than it is today, with wars fought and won by light, lethal forces advancing with extraordinary speed of maneuver. With the formidable challenges facing military construction forces today, we must be innovative in our planning, thorough in our preparations and agile in our execution.

Most of all, we must train and always be ready to *move forward together* to face emerging threats and overcome the toughest engineering problems.

When we last deployed to Iraq, we employed the concept of a Combined Marine Expeditionary Force Engineer Group, or CMEG. This concept was initially developed for employment in the Korean Theater of Operations (KTO), but, as world events unfolded, the CMEG was first tested in combat in Iraq.

During *Operation Iraqi Freedom*, the CMEG employed a very efficient task-organized structure to support the MAGTF. This structure was designed to integrate engineer forces from active and reserve units of the Navy, Marine Corps and Army, as well as those of our coalition partners, to execute a wide range of engineer missions.

Regimental task forces offered increased agility plus the ability to blend available capabilities from each of the assigned engineer units into task-oriented groups that could move, build and fight more quickly and efficiently.

We found that the CMEG concept enabled engineers to integrate more fully, to employ engineer capabilities more efficiently, and to execute more effectively as a highly inter-operable engineer force that, by design, was spread throughout the First Marine Expeditionary Force (I MEF) battlespace.

CMEG engineers, which in-cluded more than 3,000 U.S. Navy Seabees, were an integral part of the I MEF before, during and after major conflict. The CMEG engineers literally paved the way to victory and played a vital role in the historic *OIF* campaign.

Speed, agility, determination, technical capability and combat leadership—all part of the Seabee legacy—proved decisive. As such, the CMEG concept is now combat proven as an important new component of future combined air-ground combat operations.

As we anticipate new actions in Southwest Asia, as we prepare to participate in key exercises, and as we continue to plan for potential future conflicts, we continue to utilize the highly effective CMEG concept. In fact, there is great potential for a CMEG that is expanded in size, scope and mission for the KTO.

We clearly recognize that no two conflicts are alike; every potential conflict poses special challenges. In KTO, engineer tasks could be significantly more massive than those we have seen thus far. As such, they would likely require additional regimental task forces with more personnel, including Amphibious Construction Battalions, additional U.S. Army Engineers and additional engineers provided by coalition partners, as well as numerous Naval Mobile Construction Battalions and other NCF units.

It is clear that our senior leaders recognize that the engineer aspects of ongoing operations and ever-evolving plans are critical and the success of any future operation will depend, in large part, upon the success of military engineers—including the Fighting Seabees.

After seeing our Seabees in action in Iraq, working hand-in-hand with Marines, Soldiers and coalition partners, I have no doubt whatsoever we will succeed. Our successes in 2003, working in the joint and combined environment, foreshadow our roles in future contingency operations.

Fellow Seabees, rest assured that you have never let your nation down, and I have no doubt you will continue to succeed beyond my high expectations.

Thanks for all you've done; thanks for what you are doing now; and thanks for being Seabees.

KEVIN C. TIMMONS
Command Master Chief
1NCD

United Through Reading (UTR) is a great program sponsored by the Family Literacy Foundation (FLF). It provides a quality-of-life program that enables deployed personnel to communicate with children through the medium of reading stories aloud on videotape.

The videotape is then mailed back home to the family, where children can spend "virtual time" with Mom or Dad on a daily basis.

According to the FLF Web site [www.read2kids.org], reading aloud with children has been shown to be a terrific predictor of a child's future academic success. It also strengthens the bond between adult and child and provides a bridge for communication and sharing.

A General Accounting Office survey, FLF says, revealed that after pay issues, the most frequently mentioned reason for leaving the military is the frequency of deployments and subsequent effect on time spent with family. The UTR program offers a proven solution, positively impacting deployment quality of life—both at home and abroad.

The benefits for this simple yet powerful program are many. Children and parents feel much closer and children have less fear about Mom or Dad's absence. The spouse at home enjoys the support of the deployed parent, and when the deployment is concluded, reunions are easier—and morale is higher for all involved.

The FLF trains deploying personnel and homefront volunteers to manage the program during the members' deployments, and provides a great deal of supporting documentation and comprehensive instruction.

Command Brief

Includes promotional materials, program overview, Command responsibilities and best practices from previous commands.

Active Duty & Homefront Coordinator Training Seminars

Includes customized instructional manuals, resource CDs to facilitate UTR implementation throughout the deployment, and videos; program overview & benefits of participation; implementation tools with coaching techniques for interactive reading; implementation of best practices to support your program; program maintenance and reporting.

Support to Coordinators Throughout Deployment

E-mail & phone support; on-going program implementation strategies; program updates.

After-Action Communication

Participant evaluation & coordinator commendation; summary reports; Letters of Commendation from FLF to coordinators

Seabee Battalions Provide:

Command support; identification of Command liaison, Command coordinators, active-duty volunteers & Homefront Coordinator for training; video equipment, either standard VHS or Hi-8 camcorder, plus a TV-anchorman-style clip-on lavaliere microphone, tripod & VCR for reviewing videos while underway; blank videotapes and mailing envelopes are available for purchase by participants during deployment; and an on-site library of children's books.

At this writing, we have seven sets of UTR equipment in five locations, including one at each main body camp and two each in the homeports of Gulfport and Port Hueneme.

One set of equipment in both homeports may be checked out and taken on a deployment for training or an exercise and then returned when the mission is over.

The other set of equipment remaining at each of the homeports is for the Homeport Liaisons to use for the spouses who do not have the equipment and would like to have children read a book to their mothers or fathers while the parents are away on deployment.

This is an outstanding program that 1NCD strongly supports—and it's a wonderful way to stay in touch with a Sailor's family and promote reading.

See the "Newsbreak" section in this issue for a view of UTR at work with deployed Seabees.

Have a great Seabee day.

BUC(SCW) John Woolston, Seaman Recruit Nathan Hayes, CEC(SCW) John Guiliano

I am Navy Boot Camp.

Why I wanted to become an RDC

I believe we want and need the very best quality Sailors in the Seabee battalions. I decided I could either whine about it—or go to Great Lakes and do something about it. Being a Recruit Division Commander is somewhat like making yourself immortal. I know that I can still remember my Company Commanders from boot camp as if it were yesterday.

These recruits look up to you, and by the end of the training (we call the boot camp cycle a "push"), they are little versions of you and your partners. Whether you are a good RDC or bad, the recruits' main impression of the Navy is formed by you and your partners. They emulate everything you do.

What I like about being an RDC

I turn civilians into Sailors. When you have a recruit that you *know* will be a good Sailor, and you made that individual civilian into a Sailor who now embraces and applies the concept of teamwork, it is one of the most satisfying feelings. When you see one of your former recruits and they tell you how well they are doing, or they actually thank you for what you did, it makes all our work worthwhile. I also make sure that my recruits know about Seabees. I always tell them about our accomplishments and our reputation for being the "tough team" of the Navy—I tell my recruits that I am "tougher than woodpecker lips." Being at this command makes you appreciate how much *esprit de corps* we have and the pride we have in being Seabees. More than once, I have been told by my fleeter co-workers, "Boy, you Seabees sure stick together!"

What I dislike about being an RDC

Most people would say the hours, but honestly, that isn't it. It can get rough at times, but the hours you work here probably don't compare to being on deployment or out on a field training exercise. One of my biggest dislikes is that I don't have the opportunity to run Seabee crews, be knee-deep in concrete and drink stale coffee at 2230 waiting for the pad to set up (a typical concrete evolution). I guess it is true: You don't really know how much you appreciate your job until you are doing something different. In a word, I *miss* the Seabees. When I get back to a battalion, I expect I'll miss Great Lakes. That's life.

Summary

Being an RDC has been rewarding for me, as a Seabee and as a Sailor. I feel that it's good to do at least one tour outside of your normal realm. It gives you a "Big Navy" picture that you can easily lose sight of while you are in a battalion.

RDC duty gives you the unique opportunity to train the future of the Navy. You never know if that Seaman Recruit you are training to march in a straight line, fold his skivvies properly and make his rack just might be a future Force Master Chief Petty Officer of the Seabees. But I can hope.

CHIEF BUILDER (SCW) JOHN F. WOOLSTON
Recruit Division Commander
Recruit Training Command Great Lakes, Ill.

Outtake:

From the Things-Found-While-Looking-For-Something-Else File

'I shall find a way, or make one.'

Born in Cresson, Pa., on May 6, 1856, Robert Edwin Peary graduated from Bowdoin College in 1877. He was appointed to the U.S. Navy Civil Engineer Corps in 1881 and progressed through the ranks to Rear Admiral.

Peary made five expeditions to the Arctic between 1891 and 1909, covering more than 10,000 miles. On April 6, 1909, then-Commander Peary claimed to have reached the ultimate destination of 90 degrees north. With the help of African-American explorer Mathew Henson and four polar natives, the Navy CEC Flag-to-be planted a tattered American flag and achieved his lifelong dream.

Peary wrote many articles and books about the Polar regions. He died in Washington, D.C., on Feb. 20, 1920, and was buried in Section 8 of Arlington National Cemetery (www.arlingtoncemetery.net/roberted.htm).

His gravesite is topped by a huge globe on which is inscribed Peary's personal credo, "I shall find a way or make one." His wife, Josephine Diebutsch (1863-1955), is buried with him.

At 1407 hours on July 27, 2004, Google (www.google.com) listed 623 records for "Robert E. Peary High School."