U.S.S. YORKTOWN (CVS-10)
FPO San Francisco 96601

CVS10/3000
O11:ASK:jf
Ser 19
5 JAN 1969

From: Commanding Officer, USS YORKTOWN (CVS-10) (CTG-130.1)
To: Commander Hawaiian Sea Frontier (CTF-130)

Subj: APOLLO 8 Recovery Post-Mission Report; submission of

Ref: (a) Commander Hawaiian Sea Frontier (CHSF) OP PLAN 305-67

Encl: (1) Report of YORKTOWN (CVS-10) (CTU-130.1.1)
(2) Report of ARLINGTON (AGMR-2) (CTU-130.1.3)

1. As directed by reference (a), the report of APOLLO 8 recovery operations is submitted. The YORKTOWN and ARLINGTON inputs are forwarded as enclosures (1) and (2) respectively. Tape recordings of major communications circuits have been delivered separately. The post-mission report of COCHRANE (DDG-21), (CTU-130.1.2), was not available for inclusion with this report, and will be forwarded directly by COCHRANE.

2. Perhaps the single item of greatest concern to units of the Task Group was the lack of early liaison with the various parties concerned with the recovery. Initial contact was made by telephone with CTF-130 in early November, and some planning and preparation was begun at that time. Television pool personnel, however, made no requirements known to the Primary Recovery Ship until 26 November. NASA representatives boarded the ship for the first time on 2 December. As this mission vividly illustrated, the key to a safe and efficient operation lies in thorough advance planning. For Pacific missions, the Primary Recovery Ship and other ships involved must consider departure from CONUS as the deadline for most of this advance planning. It is recommended that for future missions, much earlier liaison be established.

J. G. FIFIELD

Copy to:
USS ARLINGTON (AGMR-2)
USS COCHRANE (DDG-21)

**U.S.S. YORKTOWN (CVS-10)**
**FLEET POST OFFICE**
**SAN FRANCISCO 96601**

CVS10/3000
O11:ASK:jf
Ser 18
4 JAN 1969

From: Commander, Task Unit 130.1.1
To: Commander, Task Group 130.1

Subj: APOLLO 8 Recovery Post Mission Report; submission of

Ref: (a) CHSF OP PLAN 305-67

Encl: (1) Daily Summary of Operations
(2) Narrative of Recovery
(3) Navigation Summary
(4) Air Operations Summary
(5) Capsule Recovery Summary
(6) Communications Summary
(7) Public Affairs Summary
(8) CIC Summary
(9) Engineering Summary
(10) Supply Summary
(11) General Comments and Recommendations

1. In accordance with reference (a), the post mission report, enclosures (1) through (11), is hereby submitted.

J. G. Fifield
J. G. FIFIELD

ENCLOSURE( / )

## DAILY SUMMARY OF OPERATIONS

1. Chronological Record of Events. The chronological record of events leading up to, including, and returning from the December 1968 APOLLO 8 mission follows:

| DATE | REMARKS |
|---|---|
| 10 DEC | USS YORKTOWN arrived in Pearl Harbor at 0800W (101800Z). Commenced on-load of special APOLLO 8/NASA materials. |
| 11 DEC | Chopped to CTF-130 for APOLLO 8 operations at 0830W (111830Z). Key personnel received briefing on APOLLO operations from CTF-130. At 1300W (112300Z) UDT-12 and HS-4 commenced training. |
| 12 DEC | In-port Pearl Harbor. |
| 13 DEC | Departed Pearl for SIMEX at 0659W (131659Z). One day boiler plate pick-up was completed at 1440W (140040Z). The night SIMEX was cancelled due to high sea/wind state. Returned to Pearl at 1855W (140455Z). |
| 14-15 DEC | In-port Pearl Harbor. |
| 16 DEC | Underway from Pearl Harbor at 0652W (161652Z). Conducted three day, 1100W - 1235W (162100Z - 162235Z), and three night, 1838W - 0031W (170438Z - 171031Z), boilerplate pickup drills. Conducted Fulton Pickup practice. HS-4 and UDT-12 conducted day and night APOLLO training. |
| 17 DEC | Completed one SIMEX, 0822W - 1145W (171830W - 172100W), and a critique was held by CTF-130 representatives. Returned to Pearl Harbor at 1549W (180149Z). |
| 18 DEC | Departed Pearl Harbor at 0903W (181903Z) enroute to position for APOLLO 8 launch 9N/165W in company with USS ARLINGTON (AGMR-2) and USS COCHRANE (DDG-21). |
| 19 DEC | Conducted one CPX/COMM SIMEX at 0900X - 1204X (192000Z - 192304Z). Replenished COCHRANE commencing at 0710X (191810Z). COCHRANE departed at 0754X (191854Z) for SRS (15N/165W). |
| 20 DEC | Enroute PRS launch station. Conducted one night SIMEX 0423X - 0708X (201523Z - 201808Z). Arrived PRS position for launch 9N/165W at 1440X (210140Z). |
| 21 DEC | On station for launch of APOLLO 8. |
| 22 DEC | Held station for APOLLO 8 contingency operations. When TLI was successful, departed for 07-38N/165W and arrived EOM position at 2200X (230900Z). |

| | |
|---|---|
| 23 DEC | Conducted one ship only CPX/COMM SIMEX, 1000X - 1100X (232100Z - 232200Z). COCHRANE rejoined YORKTOWN and ARLINGTON. Replenished COCHRANE, commencing at 1602X (240302Z). COCHRANE detached at 1729X (240429Z) to proceed independently to the EOM station. |
| 24 DEC | Conducted one night SIMEX, 0345X - 0724X (241445Z - 241824Z). |
| 25 DEC | Held station for APOLLO 8 operations. |
| 26 DEC | Conducted one night CPX/COMM SIMEX, 0413X - 1712X (261513Z - 261812Z), and recovered medical supplies dropped from HC-130. EOM target point changed to 08-08N/165-02W. Arrived at the new target point at 0718Z. |
| 27 DEC | APOLLO 8 detected on YORKTOWN radar at 280 miles at 0441X (271541Z). Recovered APOLLO 8 Command Module and crew at 08-07.5N/165-01.2W. APOLLO 8 film and medical samples in two containers recovered by HC-130 employing Fulton Pickup delivered to Hickam AFB. |
| 28 DEC | Launched three C-1A aircraft with Astronauts, support personnel, and equipment. |
| 29 DEC | Arrived at Pearl Harbor at 0846W (291846Z). Out-chopped CTF-130 |

## NARRATIVE OF RECOVERY - 27 DECEMBER 1968

1. The primary target point and recommended ship's position was 08-08N/165-02W, and the re-entry azimuth was 123°T. A table showing the programmed entry follows:

| Event | Latitude | Longitude | GMT(Hr:Min:Sec:) |
|---|---|---|---|
| Entry | 20-51N | 176-53E | 15:37:14: |
| BBO | 19-30N | 179-09E | 15:37:39: |
| EBO | 11-35N | 169-29W | 15:40:42: |
| Drogues | 08-08N | 165-02W | 15:45:29: |
| Mains | 08-08N | 165-02W | 15:46:23: |
| Splash | 08-08N | 165-02W | 15:51:15: |

2. The Hawaii Rescue Aircraft Positions (HC-130) were:

| Aircraft | Position | Time | Heading |
|---|---|---|---|
| 1 | 11-35N 166-45W | 1541 | 218°T |
| 2 | 04-55N 163-15W | 1541 | 034°T |
| 3 | 06-00N 158-50W | N/A | 213°T |

3. The Ship-Based Aircraft (Air-Boss - VAW-111, Recovery and Photo - HS-4) stations were:

| Aircraft | Bearing/Range from Splash | Altitude (Ft) |
|---|---|---|
| Air-Boss ONE | 303/50 | 6000 |
| Air-Boss TWO | 123/50 | 8000 |
| Recovery ONE | 313/47 | 5000 |
| Recovery TWO | 105/47 | 5000 |
| Recovery THREE | Overhead | 4000 |
| Photo ONE | Overhead | 1000 |

ALL TIMES ZULU AND ALL BEARINGS TRUE UNLESS OTHERWISE INDICATED.

1528 All YORKTOWN aircraft are on station.

1534 All aircraft turned up-range.

Enclosure (2)

1540 Hawaii Rescue ONE reports visual contact.

1541 Hawaii Rescue ONE reports S-Band contact.

1541 YORKTOWN gained radar contact APOLLO 8 at 311°T, 280 miles.

1542 YORKTOWN radar contact at 309°T, 103 miles.

1543 Hawaii Rescue ONE reports losing visual contact.

1543 YORKTOWN lost radar contact at 309°T, 41 miles.

1545 CTF-130 reported Flight Director at Houston had voice radio contact with APOLLO 8.

1545 YORKTOWN lookouts report sonic boom aft of ship (South East).

1546 APOLLO 8 reports descending slowly at 8000 ft. Cannot see chutes.

1547 APOLLO 8 reports descending past 7000 ft.

1548 Recovery THREE reports visual sighting almost level (5000 ft.).

1548 Recovery TWO reports Sarah contact 260°M. (Recovery TWO 105°T, YORKTOWN 28)

1548 Recovery THREE reports flashing lights and chutes overhead YORKTOWN at about 4000 ft.

1548 Command Module acquired by fire control radar at 157°T, 5700 yards descending.

1549 YORKTOWN gained visual contact 157°T, Command Module descending.

1550 Recovery THREE reports lost visual contact.

1552 Recovery THREE reported Command Module splashed down. YORKTOWN position 08-09.3'N/165-02.1°W. Command Module position 08-07.5N/165-01.2W

1552 Command Module on YORKTOWN Fire Control Radar at 157°T, 5000 yards.

1552 Recovery THREE closing visual contact of Command Module to mark with smoke.

1553 No answer from APOLLO 8 on radio. No strobe light. (Stable II)

1558 APOLLO 8 reports to have come upright again (Stable I).

1558 Recovery THREE reports flashing light visible and marked with smoke.

1559 APOLLO 8 reports in "fine shape."

1601 Air-Boss TWO reports high frequency relay going out loud and clear.

1601 Recovery THREE reports surface wind from 080°T.

1602 YORKTOWN advised APOLLO 8 that Command Module was in sight of ship.

1603 Recovery THREE reports making approach on Command Module.

1607 Communications loud and clear with APOLLO 8.

1607 Recovery THREE reports three bags inflated on top of APOLLO 8.

1608 Recovery THREE reports Command Module riding easy.

1610 Recovery THREE illuminated Command Module and reported that it was turning slightly (rotating) in the water.

1611 Recovery THREE reports slight burn marks on Command Module and that it is still riding well, slightly lower in the water than boiler plate.

1611 Recovery ONE reports on top.

1612 Recovery THREE reports APOLLO 8 still turning slightly and rolling about 20 degrees either side of the vertical.

1613 APOLLO 8 reports doing fine.

1615 Recovery THREE reports Command Module still riding nicely. Recovery TWO alongside and ready to illuminate.

1621 Recovery THREE reports Command Module still riding well and turning slightly.

1623 APOLLO 8 contacted Houston via ARIA Aircraft relay.

1625 Recovery THREE reports still holding Sarah, flashing light, and sighting dye marker.

1627 Recovery THREE reports Module still riding well and turning slightly with seas. Five foot seas with trace of white caps are reported in Command Module area. Center balloon is deflated more than others. Light beginning in East with good horizon.

1630 Air-Boss ONE reports Command Module illuminated by two helos and fully visible by all aircraft.

1631 Air-Boss ONE reports that swimmers will be put in water in four minutes.

1632 Recovery THREE reports Command Module riding nicely, still illuminated, and turning at about one RPM.

1633 Recovery THREE reports Command Module riding well.

1635 Recovery THREE reports first swimmer in water - thumbs up from swimmer.

1635 Recovery THREE reports sea anchor attached, still trace of dye marker. Uniform burn marks all around Command Module, no visible damage and can see lights inside Module.

1639 Recovery THREE reports second and third swimmers away with flotation collar.

1639 Thumbs up from all swimmers. Collar close aboard Module.

1641 Recovery THREE reports that collar is at Command Module and that collar is being opened.

1641 Recovery THREE reports that collar is two thirds way around Module.

1642 Recovery THREE reports swimmers seem to be having no difficulty attaching collar.

1643 Swimmers inspecting collar.

1645 Collar fully around Command Module but not yet inflated.

1645 Recovery ONE reports area searched extensively for parachutes and Apex cover with no success.

1645 Recovery THREE reports collar one half inflated.

1646 APOLLO 8 reports Command Module considerably more stable with collar attached.

1647 Recovery THREE reports two thirds collar inflated, one third not inflated. Swimmers working on that section now.

1648 Recovery THREE reports collar fully inflated.

1648 Recovery THREE reports swimmers inspecting collar.

1649 First swimmer on collar.

1651 Recovery THREE reports all flotation straps attached.

1652 Swim THREE reports collar attached, inspection completed, and requests life rafts.

1652 Recovery THREE dropped two life rafts in water.

1653 Air-Boss ONE reports natural light increasing. Capsule fully visible without artificial light.

1653 Recovery THREE reports that both chutes were visible on initial approach. On final approach parachutes were not visible.

1653 Recovery TWO reports life rafts inflated and being attached to Module.

1655 Swim THREE reports he cannot gain contact via the interphone.

1655 APOLLO 8 reports Swim THREE loud and clear (radio or interphone not stated).

1656 Recovery THREE reports that he and Swim THREE have communications with APOLLO 8 via radio.

1657 APOLLO 8 reports all OK, waiting for recovery.

1658 Command Module now 8550 yards from YORKTOWN.

1700 All swimmers in life raft, removing their gear.

1700 Command Module no longer turning and now riding very well.

1701 Swimmers on collar and working on hatch.

1703 Recovery TWO reports hatch open.

1704 Recovery TWO reports first astronaut moving outside Module into raft (LOVELL). Second astronaut out and in raft (BORMAN).

1705 Recovery TWO reports third astronaut out and in raft (ANDERS). Holding happy reunion with swimmers.

1706 All astronauts in raft, hatch closed.

1707 YORKTOWN turning upwind.

1707 Recovery TWO reports one end of raft loose. Swimmer working to attach to Module.

1708 Recovery TWO reports they are moving ANDERS into second raft.

1708 All astronauts moved to second raft.

1708 Recovery THREE reports received sign for basket - moving in for pick-up.

1714 Recovery THREE reports all astronauts onboard and on way to YORKTOWN with Recovery ONE and Photo ONE in company. Recovery TWO remaining with Command Module.

1718 Recovery THREE on deck YORKTOWN with astronauts.

1727 Recovery ONE back over Command Module.

1734 Recovery TWO reports auxiliary lifting loop attached and being taped to regular loop at this time.

1738 YORKTOWN 6000 yards from Command Module.

1738 Recovery TWO reports auxiliary loop installation complete.

1740 Recovery TWO reports swimmers completed work, in raft, and awaiting arrival of the ship.

1804 Recovery ONE reports all three swimmers in raft, Module riding steady, ready for retrieval.

1806 Inflation (righting) bags clearly visible from YORKTOWN.

1808 Module 400 yards from YORKTOWN. One swimmer in sight.

1809 Module approaching YORKTOWN stem. All three swimmers in sight.

1813 Command Module abeam YORKTOWN.

1815 One line over with swimmers hauling in. Righting bags deflated.

1816 In haul line attached, sea anchor cut loose.

1818 Lower hook engaged on Command Module, swimmers left Module for rafts.

1819 Main hook engaged, swimmers in life raft.

1820 Command Module hoisted from water.

1821 Module over elevator.

1822 Module lowered for collar removal.

1825 Collar removed.

1826 Module being swung inboard for cradle.

1827 Module over cradle.

1828 Module firmly in cradle.

1829 Module being secured in cradle.

## NAVIGATION SUMMARY

Attachment: (1) Annotated local operating chart
(2) Annotated track chart
(3) Annotated recovery area chart

1. Summary of events. The YORKTOWN steamed a total of 4064 nautical miles while attached to CTF-130 in the APOLLO 8 recovery operations. A summary of events follows:

a. 130659W to 131855W DEC 68. Pearl Harbor and return. Operated in COMHAWSEAFRON operating areas G-6, 8, 16, 18, 24, and 26 for APOLLO training. Steamed a total of 161 nautical miles.

b. 160652W to 171549W DEC 68. Pearl Harbor and return. Operated in COMHAWSEAFRON operating areas G-6, 8, 16, 18, 24, and 26 for APOLLO training. Steamed a total of 438 nautical miles.

c. 180903W DEC 68. Underway for initial launch station. 190708X DEC 68. Refueled USS COCHRANE (DDG-21) at position 16N/162-25W. 200400X DEC 68. Conducted SIMEX at position 10-34N/164-24W. 201440X DEC 68. Arrived 9N/165W. Steamed a total of 908 nautical miles.

d. 201440X to 221600X DEC 68. Operated within 20 nautical miles of 9N/165W. Steamed a total of 504 nautical miles.

e. 222200X DEC 68. Arrived 7-38N/165W. 222200X to 261430X DEC 68. Operated within 20 nautical miles of 7-38N/165W. Steamed a total of 982 nautical miles.

f. 261818X DEC 68. Arrived 8-08N/165-02W (updated recovery area). 270451.7X splashdown. YORKTOWN position 8-09.3N/165-02.1W. Command Module position 8-07.5N/165-01.2W. These positions were determined from a DR plot that had commenced 4 hours prior to splash down on a locally constructed small area, large scale mercator projection plotting sheet with a scale of 1 inch equal to $2\frac{1}{2}$ nautical miles. Positions were updated at 5 minute intervals with 3 line Loran A fixes. A celestial fix could not be obtained at morning twilight on 27 December 1968 due to overcast conditions. Based on information collected during the days prior to splash down, it is considered that the position accuracies are within plus or minus 1 nautical mile in longitude and plus or minus 2 nautical miles in latitude. Steamed a total of 145 nautical miles.

g. 270730X DEC 68. Departed recovery area. Arrived Pearl Harbor at 290846W DEC 68. Steamed a total of 926 miles.

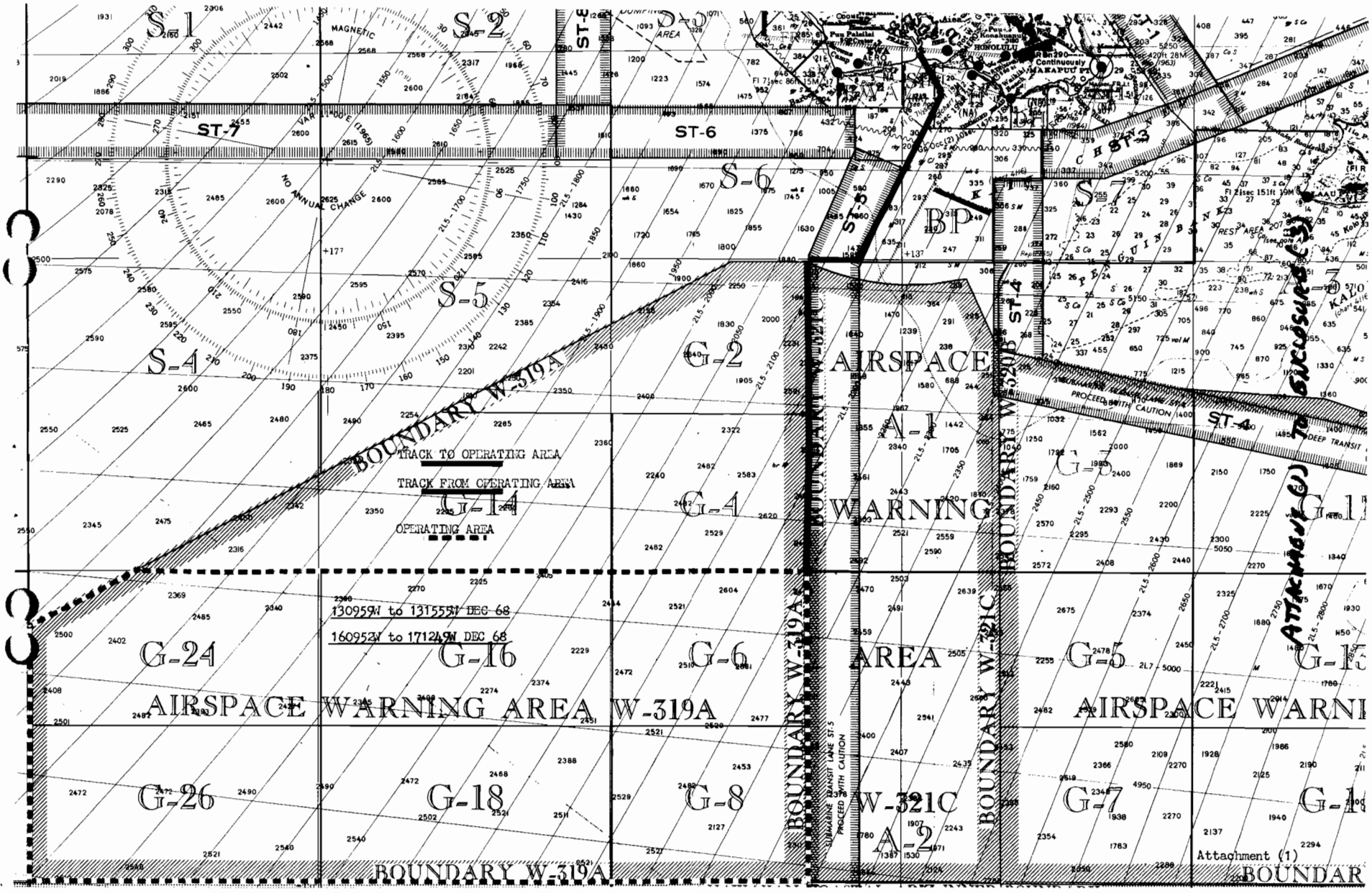

S-1
S-2
S-3
S-4
S-5
S-6
ST-7
ST-6
ST-5
ST-4
ST-3
BP
AIRSPACE
WARNING
AREA
A-1
A-2
W-321C
G-2
G-4
G-6
G-8
G-14
G-16
G-18
G-24
G-26
G-5
G-7
BOUNDARY W-319A
BOUNDARY W-321C
BOUNDARY W-320B
TRACK TO OPERATING AREA
TRACK FROM OPERATING AREA
OPERATING AREA
130959W to 131555W DEC 68
160952W to 171249W DEC 68
AIRSPACE WARNING AREA W-319A
AIRSPACE WARNI
SUBMARINE TRANSIT LANE ST-5
PROCEED WITH CAUTION
DEEP TRANSIT
NO ANNUAL CHANGE
MAGNETIC
HONOLULU
Attachment (1)

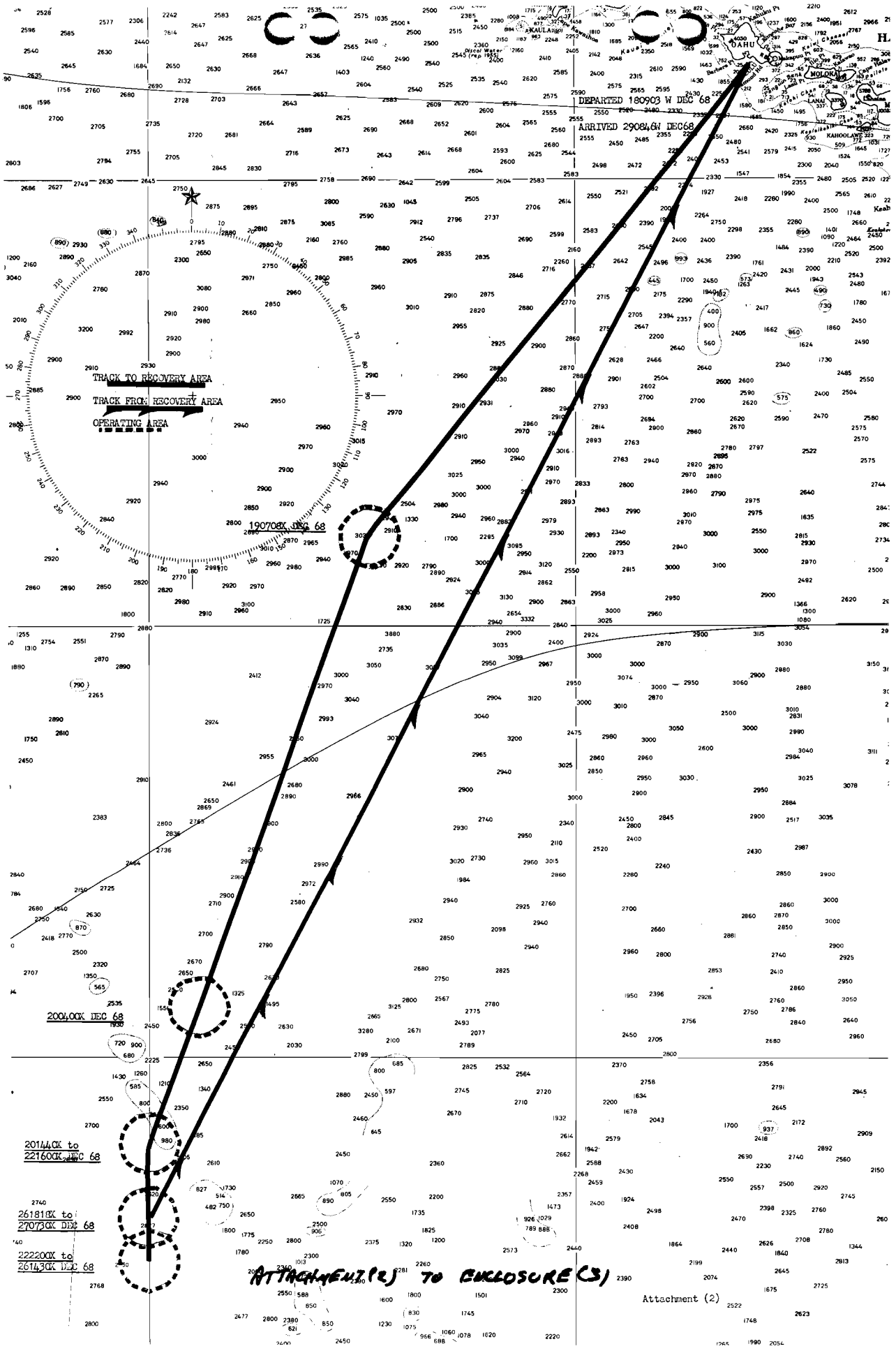


ATTACHMENT(2) TO ENCLOSURE(3)

NO. 3000-3Z

Price 15 Cents

# POSITION PLOTTING SHEET

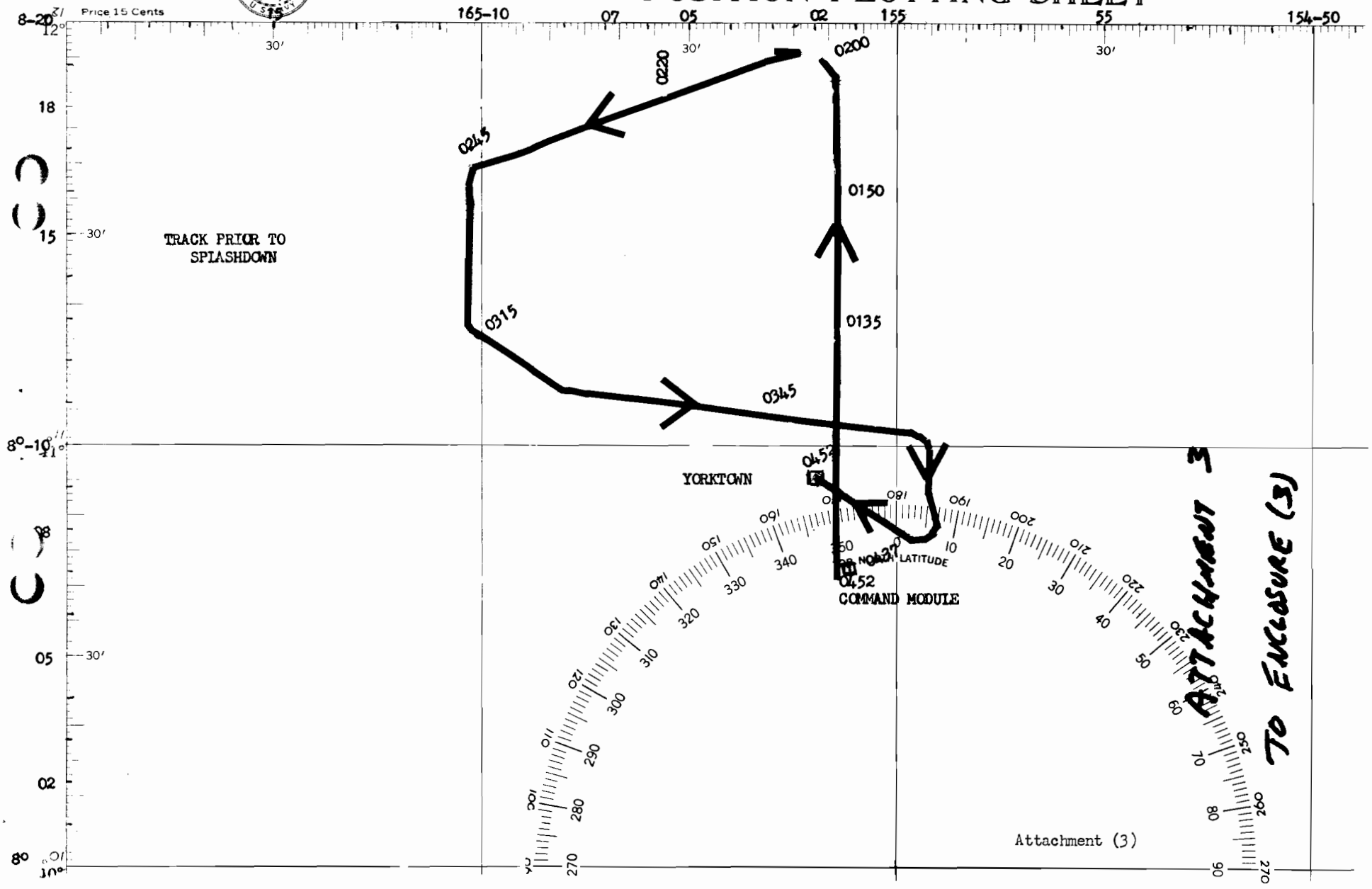


ATTACHMENT 3 TO ENCLOSURE (3)

Attachment (3)

## AIR OPERATIONS SUMMARY

Attachment: (1) Air Group Flight Hour Tabulation.
(2) Helicopter Squadron FOUR Air Operations Summary.
(3) Carrier Airborne Early Warning Squadron ONE ELEVEN, Detachment 34 Air Operations Summary.

1. General. Air Operations in support of the APOLLO 8 recovery were conducted in accordance with standard CVA/CVS NATOPS procedures. No special procedures for aircraft scheduling or control were required; however, a certain amount of patience and understanding was necessary in providing services to news media and other civilian personnel not familiar with the tight routine of shipboard aviation. By having previously worked with all squadrons or units assigned, there already existed good lines of communication between the air group and ship.

2. Flight Training Summary. The following flight training was conducted in preparation for the recovery: (Times shown are aircraft launch to aircraft land time.)

| Date | Time | Place | Description |
|---|---|---|---|
| 11 DEC | 1325-1512W | Middle Loch | HS/UDT practice with boilerplate. |
| 11 DEC | 1812-2008W | Middle Loch | HS/UDT practice with boilerplate. |
| 13 DEC | 1150-1440W | 45NM S.W. Pearl | One period of HS/UDT practice with boilerplate. (Sea state 5, winds 30-40 knots.) |
| 16 DEC | 1100-1235W<br>1838-0031W | 45NM S.W. Pearl | Two periods of HS/UDT practice with boilerplate. (Day 1, Nite 1) |
| 17 DEC | 0822-1145W | 45NM S.W. Pearl | First SIMEX (simulated COMM). |
| 19 DEC | 0900-1204X | Enroute | SIMEX CPX, two E-1B relay aircraft. |
| 20 DEC | 0423-0708X | ONSTA | First full scale SIMEX. |
| 21 DEC | 1122-1227X | ONSTA | Communications/BELLHOP tests. |
| 23 DEC | 1204-1326X | ONSTA | Communications/BELLHOP tests. |
| 24 DEC | 0345-0724X | ONSTA | Second full scale SIMEX. |
| 26 DEC | 0413-0712X | ONSTA | SIMEX CPX, two E-1B relay aircraft. |

3. Operational Flights

a. Weather reconnaissance flights were conducted using two C-1A aircraft on 21, 23, 24, and 26 December, accumulating a total of 23 flight hours.

b. The actual recovery was made with two E-1B aircraft and four SH-3D and accounted for 20.7 flight hours.

4. Logistics Flights. YORKTOWN's COD assets consisted of two C-1A aircraft assigned to the ship plus a third C-1A with crew provided by Fleet Tactical Support Squadron THIRTY (VR-30). When on station, due to the range to Honolulu from the ship's operating area (912NM) COD operations with the C-1A were not feasible.

a. Media Transportation. During SIMEXs and on departure from Pearl Harbor on 18 December, flights were flown as outlined below:

(1) On 13 December two C-1A aircraft provided transportation for twelve local journalists from Hickam AFB to the ship and return.

(2) On 18 December, as the ship was departing Pearl Harbor, the ABC representatives announced that a 1500 pound shipment of camera equipment had not arrived. One C-1A was launched when clear of the harbor and met the incoming commercial flight containing the equipment at Honolulu International. It was delivered to YORKTOWN via C-1A as the ship proceeded outbound. This trip accounted for less than two hours of flight time.

(3) On 23 December helicopters of HS-4 shuttled 16 news media personnel to USS ARLINGTON (AGMR-2) for a briefing and return to YORKTOWN.

(4) Other services for news media members included helicopter trips for photography of the ship departing Pearl, while replenishing, and while underway at sea. In addition, 8 news media personnel rode as passengers on C-1A weather reconnaissance flights to gain familiarity with carrier operations.

b. Direct APOLLO 8 Support. Three C-1A flights were required on the day following recovery for transportation of material and personnel to Hickam AFB. It was determined through a study of C-1A performance statistics that the maximum safe range for C-1A launch inbound to Hickam AFB would be 450 nautical miles. The ship made necessary speed to reach such a position for launch of the "flight data" C-1A at 1400Z on the 28th. Later the same day the remaining two C-1A aircraft were launched with NASA personnel and the astronauts on board (with all astronauts in the same aircraft) and arrived at Base Operations, Hickam AFB, at the prescribed block time of 290030Z. These three flights terminated at CVS-10 and accumulated a total 14.3 flight hours.

c. Other Flights

(1) On 21 December the ship conducted both day and night carrier qualification and refresher landing practice. Arrested landings totaled 78 day and 20 night. Helicopters completed 11 day and 18 night CQ landings.

(2) On 23 December two E-1B aircraft conducted photographic reconnaissance of Palmyra Island to gain more information as to its possible use as a divert field. The photographs disclosed that the runway is overgrown by vegetation but that the condition of buildings and roads show signs of possible habitation.

5. Operation of CVS-10 CATCC. The Air Operations Officers conducted all the pre-flight briefings and designed a standard Case III departure/lost communications plan for use with the SIMEX events and for the APOLLO 8 recovery. By using departure radials consistent with assigned aircraft positions, the transit time from launch to on station was held to a minimum. After all aircraft had been handed over to CIC, the CCA team provided a back-up for the tactical plot. A separate tape recorder in CCA was used to provide back-up taping of communications on the astronaut UHF primary frequency.

6. Comments and Recommendations

a. Comment. Prior to sailing from Pearl Harbor, clearance had been requested by COMHAWSEAFRON for embarkation of newsmen in YORKTOWN helos. CINCPACFLT granted this permission. It developed however, that media personnel desired transportation for various purposes in fixed wing aircraft as well. This required further message traffic to expand the authorization to include fixed wing and caused a delay to news media personnel.

Recommendation. That CTF-130 Public Affairs Officer obtain the required advance clearance for news media personnel to embark in all types of aircraft assigned to the ship. In addition, it is recommended that he administer the preparation of "hold harmless" releases and submit them to the Air Operations Officer at the time of press boarding or shortly thereafter.

## AIR GROUP FLYING HOUR TABULATION

| | Category | HS-4 | VAW-111 | VR-30 | CVS-10 | TOTALS |
|---|---|---|---|---|---|---|
| A. | To/from deployment site | 10.0 | 0.0 | 5.4 | 0.0 | 15.4 |
| B. | On mission | 13.5 | 7.5 | 9.2 | 32.5 | 62.7 |
| C. | On SIMEXs | 99.1 | 108.9 | 0.0 | 0.0 | 208.0 |
| D. | Strip alert at home station | 0.0 | 0.0 | 0.0 | 0.0 | 0.0 |
| E. | Strip alert (condition aircraft) at deployment site | 23.9 | 14.5 | 0.0 | 0.0 | 38.4 |
| F. | Number of personnel committed to mission (on perdiem/not on perdiem) | 0/206 | 0/71 | 0/5 | 0/18 | 0/300 |
| G. | Number of perdiem man-days | 0.0 | 0.0 | 0.0 | 0.0 | 0.0 |

Total flying hours, all models: 286.1

Attachment (1) to Enclosure (4)

## HELICOPTER ANTI-SUBMARINE SQUADRON FOUR AIROPS SUMMARY

1. Mission. HS-4 was assigned the responsibility of providing three recovery helicopters, one photo helicopter and sufficient support personnel to sustain these aircraft. The primary objective of this mission was the deployment of UDT swimmers and the recovery of the APOLLO 8 crew.

2. Helo APOLLO Training

a. Prior to deployment, HS-4 and the Underwater Demolition Team 12 swimmers conducted day and night recovery operations in San Diego Bay. A total of eight flight hours were devoted to practicing procedures outlined in the NASA Recovery Manual. These exercises served to develop communication and crew coordination between the pilots and the UDT personnel. The influence of the lights from the city in the bay area reduced the realism during this period and did not produce a valid open sea night environment. Crews preselected for the APOLLO 8 mission conducted recovery training at this time and became proficient with the UDT day/nite hand signals. Safety in every aspect was stressed.

b. Procedures similar to those practiced prior to departure from San Diego were conducted on the day and night of 11 December 1968 in the MIDLOCH section of Pearl Harbor. Additional aircrew/Underwater Demolition Team coordination was achieved but the influence of calm waters, a confined operating area, and the lights of the city at night reduced realism. Prior training by both the squadron and Underwater Demolition Teams in the San Diego area appeared to make training in the MIDLOCH area superfluous.

c. The daylight helo recovery practice session conducted on 13 December 1968 with the ship at sea was restricted by a sea state of five and high winds. One recovery helo was launched to provide the UDT drop but it became clear that the prevailing weather conditions made the swimmer deployment and collar installation risky. The boilerplate was tossed about extensively by the wave action making collar installation difficult resulting in the swim team becoming prematurely fatigued. Further training for this day was cancelled.

d. On 16 December both day and night recovery sessions were again conducted. The weather was considerably better with moderate winds and sea state of three. Night operations were hampered by local shower activity but modified procedures alleviated the difficulties. The day practice sessions went smoothly and the recoveries were accomplished in a minimum of time.

3. SIMEXES

a. A full scale daylight APOLLO practice was conducted on 17 December with all aircraft assuming station assignments simulating those required

on an actual recovery day. Initial aircraft positioning was delayed because the TACAN was inoperative. Helo positioning was provided by the E-1B aircraft. Helo arrival and contact reports were incomplete in some cases; however, the recovery operation went well. No problems were encountered with the collar installation.

b. The first full scale night SIMEX was conducted on 20 December. TACAN was available on this exercise and station keeping presented no problem. E-1B aircraft exercised positive helo control during intermittent IFR conditions. Swimmers were not deployed until first light although two recovery helos hovered close aboard the capsule illuminating it with search lights prior to that time. No problems were encountered during this recovery and collar installation went smoothly.

c. The last night SIMEX was conducted on 24 December. All navigation equipment operated satisfactorily. SARAH contacts were broadcast by the three recovery helos, a boilerplate fix was established, and the recovery helos arrived on the scene. They illuminated the capsule but delayed the swimmer deployment until first light. No problems were encountered.

4. Actual APOLLO Recovery. At 0345 on the morning of 27 December the helos were launched, arriving on station without incident. Capsule reentry time was as briefed and splashdown occured within three miles of the ship. Recovery Three established visual contact while the Command Module was still descending. An "on top" position was established within seconds of splash down. The Command Module's SARAH beacon and strobe light functioned normally but were lost momentarily after splashdown when the module went to the Stable Two position. Recovery Three conducted an automatic approach to the module, illuminated it with the search light and established communications with the crew of APOLLO 8. The swimmers were deployed at first light and subsequent events of the recovery proceeded normally. Without the collar the Command Module appeared to be less stable than the boilerplate but no problems were encountered with the recovery or astronaut retrieval. The actual recovery went smoother than previous SIMEX operations.

5. Night Astronaut Helo Recovery Procedures/Recommendations. The following discussion is based upon information gained from the night SIMEXES as well as the actual night recovery of APOLLO 8. Conditions for the practice recoveries varied from a well lighted area with good visibility, smooth seas and calm winds, to a black overcast night with high winds, six foot swells and reduced visibility (less than a mile) in showery precipitation. Using the following procedures the squadron successfully and safely made night recoveries under the most adverse environmental conditions.

a. The daylight helo procedures set forth in figure 3-4 page 3-9 of the APOLLO Recovery Operational Procedures Manual of 20 August 1968

should be modified for night recoveries to conform to diagram 1 shown herein. The account of the procedures and tactics developed by HS-4 were compiled after ninety-nine hours of SIMEX flight time and several ground evaluations. The following procedures provided the greatest opportunity for successful mission accomplishment while maintaining the degree of safety mandatory for this type of evolution.

b. Following SARAH contact the helicopter should proceed to the Command Module. Once overhead, the position should be marked by a long burning smoke light and then a "Night and Low Visibility Rescue Pattern" conducted as outlined in the SH-3D NATOPS Flight Manual, pages 4-9 to 4-11. This pattern places the helo in a stable 40 foot hover, down wind of the module. Once this hover has been established and with the module in sight, illumination can easily be maintained with the white controllable spot light, and the flood/hover lights. It is safer to allow the co-pilot to fly the entire approach so the plane commander is free to move the lights and keep a visual look out without interrupting his instrument scan. Once in a stable hover with the CM in sight the plane commander again takes the controls. A brief maneuver to 10 feet/10 knots can be executed to deploy the swimmers. This is accomplished by using the cruise coupler, resetting the altitude control to 20 feet while the pilot overcontrols the stable doppler signals.

c. Following swimmers deployment the altitude control should be set to 40 feet, zero ground speed established and left drift initiated. Once the Command Module is no longer influenced by the rotor wash, the left drift is stopped, and a slow drift aft is commenced to reposition for the next swimmer deployment. Although these procedures may appear complicated, it is a safe maneuver to perform provided the pilot manually overrides the altimeter/VA mode. These procedures should allow the pilot to keep the module and swimmers in sight at all times and eliminates the need for more than one approach to the Command Module.

d. Following sea anchor deployment and collar inflation, the helo should be stationed from 40-60 yards downwind of the module in preparation for raft deployment. Once the rafts are inflated and secured to the collar at both ends, a swimmer should be positioned in the raft. The remaining two swimmers should position themselves in the water at either end of the life raft to provide additional stabilization. The swimmer in the raft should provide assistance to the astronauts when they are ready to embark in the rescue net. When the swimmers and astronauts are ready for this evolution, the helo pilot should move in, override the doppler hover and respond to the directional commands of the crewman. The helo should remain directly over the module in a 40 foot hover. Once an astronaut is in the net, the pilot should cause the helo to gain 10 feet of altitude. This will ensure a positive rate of ascent and reduce the possibility of dragging the astronaut through the water. Some difficulty was experienced in holding the helo directly over the module due to its drift and rotation. Strict adherence to the crewman's verbal directions are necessary at this point since the pilot has no visual contact with the module.

DIAGRAM 1

This diagram depicts the procedure for night deployment of swimmers, flotation collar, rafts, auxiliary lifting loop, etc. Significant points in the pattern are indicated by number.

WIND AND C/M DRIFT

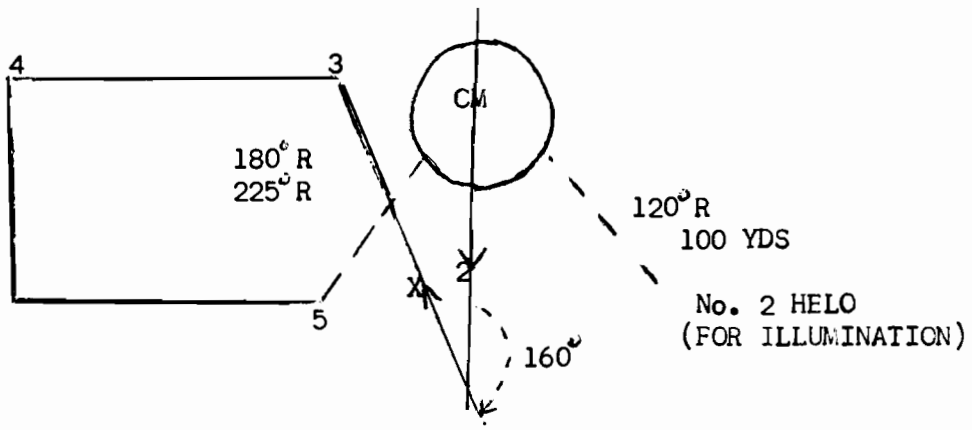


(1) Make an approach from downwind about 150° - 160° to the direction of C/M drift at 10-15 feet altitude and 10 kts ground speed.

(2) Deploy the 1st swimmer (X) (with sea anchor) about 15-20 feet downwind from the C/M.

(3) Turn the helicopter into wind, climb to 40 feet and begin sideward flight to a distance (dependent upon wind and sea conditions) until the rotor wash has no affect on the C/M.

(4) Move aft and right to a position about 225°-180° rel. at a distance where rotor wash will have no effect on the C/M.

(5) Maintain a hover in this relative position while illuminating the C/M and wait for further signals.

Repeat steps 1 through 5 (once the sea anchor has been installed) deploying the 2nd and 3rd swimmers (at X) with the flotation collar.

6. Recovery Procedure Recommendations

a. The night/low visibility rescue procedures should be used as outlined in the SH-3D NATOPS Manual and in paragraph 5 above. One of the primary recovery helicopters should be positioned for additional illumination during the rescue.

b. One member of the swim team should have portable UHF transceiver type PRC-63 or PRC-90.

c. The swimmers should have strobe lights attached to their life vests.

d. The senior helicopter aircraft commander should have operational control over all helicopters in the immediate vicinity of the Command Module.

e. One swimmer should be deployed first to attach the sea anchor. Once the sea anchor is in place the other two swimmers should be deployed with flotation collar. Prior to recovery it must be clearly understood by swimmers and astronauts who will open the CM hatch to permit egress. The swim team will always have the capability of opening the hatch from the outside regardless of who has been briefed to accomplish this task.

f. The astronauts should be retrieved one at a time using the Billy Pugh rescue net for reasons of safety and H-3 hoist limitation.

7. Aircraft Maintenance. In order to support the APOLLO 8 recovery mission six of the ten embarked helos were modified by removing the AQS-13 sonar equipment. SARAH equipment was installed in five of these six aircraft. Since recovery crews were assigned to specific aircraft every effort was made to insure that these helos were maintained in the highest state of mission readiness.

8. General Comments and Recommendation

a. Comment. Fade out of the Beeper and Strobe light when the Command Module went to the Stable two condition following splash down precluded the helos from maintaining an accurate position.

Recommendation. Whenever possible the primary recovery ship should provide helos with the range and bearing to the Command Module when it is in the Stable two condition.

b. Comment. Several minor problems were encountered during installation of SARAH equipment. The mounting holes on the antenna brackets did not align with the screws on the aircraft. The antennas would not fit into the brackets. The bolt holes on the antenna and its brackets would not align. Modifications were made at the organizational level by

maintenance personnel to complete the installation. Total manhours involved in the SARAH installation for five aircraft is as follows:

| | |
|---|---|
| Unpack and assemble into kit form | 15 Manhours |
| Installation of kits on A/C | 50 Manhours |
| Removal of SARAH equipment | 10 Manhours |
| Repack equipment | 9 Manhours |
| TOTAL | 84 Manhours |

No spare parts were received and no extensive maintenance was required (two sets were peaked after installation). Two additional installations were available as replacements, if needed. SARAH equipment performance was excellent and reliability was high.

Recommendation. SARAH equipment should be pre-assembled and packaged in kit form. This should eliminate the need for modifications in the field and facilitate installations.

c. Comment. The altitude of 8,000 feet for Recovery One and Two as outlined in the recovery manual is excessive. There is a small degradation of SARAH acquisition range by lowering this altitude to 5,000 feet; however, it remains within the limits for mission requirements. 8,000 feet is fully within the operational envelope of the SH-3; when fully loaded as in the case of recoveries, and with the high density altitudes encountered in the recovery of APOLLO 8, excessive fuel and time is required to climb to this altitude. It also requires the pilot to use high rates of descent when the module comes down close to the recovery aircraft.

Recommendation. That the maximum recovery station altitude for the SH-3 be set at 5,000 feet.

CARRIER AIRBORNE EARLY WARNING SQUADRON ONE ELEVEN, DETACHMENT 34

AIR OPERATIONS SUMMARY

1. E-1B Operations Summary

a. Mission. VAW-111 Detachment 34 was tasked with providing four E-1B's, along with flight crews and support personnel, in support of APOLLO 8 recovery operations. As the only fixed-wing operational unit embarked in the Primary Recovery Ship (PRS), the E-1B's were assigned the mission of Air-Boss: i.e., air on-scene commander of recovery operations in the event that the APOLLO 8 Command Module (CM) landed out of sight of the PRS. Collaterally, the E-1B's were assigned the task of UHF/UHF and UHF/HF relay of 296.8mhz (Astronaut Voice Frequency) to the PRS and to CTF-130. As a secondary mission, the E-1B's were assigned air control of the recovery helicopters during night and IFR recovery operations, to provide both aircraft separation and vectors to the CM.

b. Training and Operations

(1) For the E-1B to provide UHF and HF voice relay, installation of a special APOLLO Communications Relay Package was required. The package consists of two ARC-52 transceivers, an ARC-94 transceiver, a Collins 490T-1 antenna coupler, control boxes, and an equipment rack. As intended for operational use, this package provides the capability to (a) relay two discrete UHF frequencies bi-directionally and (b) simultaneously relay traffic from both UHF frequencies mono-directionally on HF. Thus, the E-1B relay provides two-way UHF communications beyond line of-sight, between the CM, recovery aircraft, and the PRS; simultaneously permitting the Task Force Commander to monitor on HF all CM and recovery unit communications.

(2) Since the relay package is complex in operation, and is not standard equipment, the first phase of Detachment 34's APOLLO flight training concentrated on equipment familiarization and functional checks. In the space of three weeks prior to deployment, the relay packages were installed in four detachment aircraft, and all flight crews gained thorough and successful operating experience in all aspects of its use.

(3) No E-1B operations were conducted in transit between San Diego and Pearl Harbor, except a 9 December fly-off to NAS Barber's Point. UHF/UHF and UHF/HF relay was conducted successfully on the fly-off. The E-1B's were staged out of Barber's Point for four days, flying communications checks daily, and flying aboard YORKTOWN on 13 December. Communications checks and Bellhop checks were conducted at every opportunity, to insure equipment status and to enhance coordination between YORKTOWN's CIC and CTF-130.

(4) The E-1B's performed the Air-Boss function in SIMEXs on 17, 24 and 26 December. Two E-1B's were airborne in each SIMEX, acting as on-scene commander, providing the highly important voice relay to CTF-130, and providing air control for the recovery and photo helicopters.

c. The APOLLO 8 Recovery. The meticulous recovery training and the repeated communications checks contributed to a virtually perfect actual recovery of the APOLLO 8 astronauts. The E-1B launch was delayed slightly by a trim tab indicator failure in the Air-Boss 2 aircraft, requiring a pilot switch into the spare Air-Boss E-1B. From that point the operation went smoothly. With Air-Boss 1 and 2 on stations, the controllers were able to vector the recovery helicopters safely and expeditiously in the pre-dawn darkness to the point of the CM splashdown. Air-Boss 2 remained at altitude to provide communications relay of the entire recovery to YORKTOWN and CTF-130; both the UHF and the HF portions of the relay were reported as excellent.

d. Post Mission. On the day following the recovery of the APOLLO 8 astronauts and the CM, the E-1B's drew the additional assignment of providing radar escort/flight following for the C-1A's which transported the astronauts and APOLLO related scientific data and material to Hickam AFB. Using its radio relay package, the E-1B's were also able to keep YORKTOWN in radio contact with her C-1A's in order to monitor the progress of their flights.

2. Comments and Recommendations

a. Comment. Communications relay by the E-1B would be enhanced if bi-directional UHF/HF relay could be provided.

Recommendation. That the feasibility of developing a bi-directional UHF/HF relay capability for the E-1B be considered.

b. Comment. Search for the CM before and after splashdown would be greatly facilitated if the craft could be interrogated by IFF.

Recommendation. That consideration be given to the feasibility of installing a small IFF transponder in future CM's to take advantage of recovery forces airborne and surface radar/IFF search capability.

## CAPSULE RECOVERY SUMMARY

Attachment: (1) List of Recovery Team Billet Assignments

1. Recovery Training

a. Training for capsule recovery consisted of two practice pickups at pierside and ten practice lifts at sea. Prior to the first practice session, personnel were given individual assignments by name with no-one being given more than one job to perform.

b. The first lift at pierside was utilized to place the boilerplate in the Command Module dolly and determine exact placement of the dolly. The suspension angle of the boilerplate made experimentation necessary to find the proper position for the dolly; once this position was determined spots were painted on No. three elevator to facilitate quick positioning for future evolutions.

c. The second lift at pierside was made by placing the boilerplate on the pier. All required lines were led out and attached to the boilerplate in order to determine the best positioning for blocks and rigging. With all lines being tended from the ship, the boilerplate was lifted on board and set in the Command Module (CM) dolly.

d. The first practice at sea was conducted under extremely adverse conditions with 30 knot winds and sea state of five. The boilerplate was placed in the water utilizing a tripping line on the B and A crane hook. The chain on the tripping line was cut by the boilerplate hoisting ring, resulting in an inability to disengage the hoisting ring from the hook. A hazardous condition resulted and was averted only when the boilerplate came free of the hook of its own volition. YORKTOWN commenced an approach positioning the boilerplate to leeward. The high wind set the ship on the boilerplate at a greater than expected rate causing the boilerplate to contact and slide along the side of the ship resulting in some hazard to the swimmers. Number three elevator was partially raised to allow the boilerplate to pass under it and the retrieving line was passed to the swimmers from the after edge of the elevator. After the retrieving line was secured to the boilerplate it was pulled under the B and A crane, the hoisting strap was attached and the boilerplate was hoisted aboard. The rafts drifted aft to the starboard quarter where they were hoisted aboard with a light line. The swimmers experienced some difficulty with the undertow effect created by wave action against the side of the ship, and swam out to be picked up by helicopter.

e. On succeeding practices it was decided to utilize the hoisting strap for placing the boilerplate in the water. To rig the hoisting strap for lowering, it was necessary to bend the tripping line to the ratline on the hoisting strap hook. The tripping line was then used to pull the hook clear of the hoisting ring for disengagement. The ship's motor whaleboat was put in the water to tow the swimmers' life rafts to the fantail where they were pulled aboard; this procedure kept the swimmers away from the turbulence experienced against the side of the ship. These two changes to procedure effectively solved the major problems encountered on the first recovery.

f. YORKTOWN effected three practice recoveries. Procedures used were essentially the same as for day recovery with the additional requirements of illuminating the recovery area, and keeping the swimmers in visual contact at all times. White light was used for illumination with floodlights being placed along the edge of No. three elevator and the crane sponson. A spotlight was used to light the boilerplate during the approach, and provided excellent illumination while the boilerplate transited the area from the bow to the vicinity of the B and A crane. The swimmers were recovered by Jacobs ladder just aft of the crane sponson in order to utilize illumination provided by the floodlights.

g. Complete simexes were held on 17, 20, and 24 Dec. The boilerplate was placed in the water before sunrise to simulate actual time of splashdown. In all instances daylight procedures were utilized for the recovery and the boilerplate came aboard without incident.

2. Recovery Summary. The actual recovery of the spacecraft was accomplished on 27 December 1968. Higher than average wind conditions and sea state existed in the recovery area. The ship experienced as much as 8 degrees roll due to sea state. After a short arrival ceremony for the astronauts, YORKTOWN made its approach into the wind to preclude being set on the CM by the 17-18 KT winds. In spite of six foot seas the smoothest and most efficient recovery of the series was effected. The motor whaleboat was not put into the water due to the combination of high sea state and ships roll; the rubber life rafts were recovered at the starboard quarter. The combination of ships roll and high sea state combined to place sufficient strain on the spacecraft's integral lifting loop to part three of the five strands of wire built into the loop. The auxiliary lifting loop was sufficiently strong and provided an adequate safety margin for the lift.

3. Comments and Recommendations

a. Comment. A considerable amount of swimmers' gear must be recovered after recovery of the CM.

Recommendation. A motor whale boat greatly facilitates handling of rubber life rafts and equipment. All equipment can be easily brought up over the fantail. When adverse sea conditions preclude launching the motor whale boat a sea painter can be rigged at the starboard quarter for retrieval of life rafts.

b. Comment. Current NASA procedures prescribe controlling all shotline signals from the bridge. The swimmers have difficulty sighting visual signals given from the bridge and a coordination problem exists between the bridge and No. three elevator.

Recommendation. That all shotline signals be transmitted from No. three elevator.

c. Comment. When swimmers have excessive difficulty attaching the flotation collar they tend to become over-fatigued. Attempting to untangle rigging and salvage a difficult situation can become costly in terms of time and safety.

Recommendation. A timely drop of a second set of swimmers with a new flotation collar should be made in the event of undue difficulty during any evolution.

d. Comment. During the day training recovery evolution conducted under extreme wind and sea conditions on 13 December 1968, difficulty was encountered by the UDT swim team while installing the flotation collar. At the time of the difficulty, the swim team was employing the flotation collar in accordance with the recommended procedure as outlined in the February 1968 revision of the "Apollo Spacecraft Flotation Collar Instructions". Hookup 1 and 2 had already been made and hookup 3 was just about to be made when a large swell rocked the "boiler-plate" causing the collar to slip beneath the spacecraft and become hopelessly entangled. The problem was magnified when the sea anchor line snapped, making any attempt to untangle the collar and install it impossible. Consequently, a second swim team with another collar and sea anchor had to be deployed to recover the "boiler-plate".

Recommendation. It is recommended that the outlined procedure for collar installation be modified. The first step should be to place the collar immediately to the right of the sea anchor ring, open the left end of the collar package and attach the bungee hook (without removing the collar itself). The second step should be to open the right side of the package, remove the bungee and swim it around the craft attaching the hook in the sea anchor ring. The collar package at this time will be positioned on the opposite side of the spacecraft from the hatch and sea anchor with only the bungee removed. Step three will be to open the package completely and swim the collar around the craft (one swimmer on the right, another on the left and the third helping feed it out). Once

the two sides of the collar are at the sea anchor ring the positioning strap and the wire hookup will be made. The pads can then be placed and the collar inflated. It is reasoned that the attachment of the bungee, before removing the collar from the package, will insure that the collar will not slide under the spacecraft during sea swell action. The second swim team deployed on 13 December 1968 utilized this method and had no difficulty during installation. Further training using this method proved it easier and faster than the method outlined in the procedure manual.

e. Comment. During training for this mission a degree of difficulty was encountered due to an insufficient amount of certain equipment. Due to loss or damage, the stock of items such as sea anchors, training flotation collars and life rafts reached a critical level. Consequently, last minute arrangements had to be made to replenish the supply of such equipment.

Recommendation. It is recommended that consideration be given to possible loss/damage to these items during training that a sufficient stock of each be available. Fifteen to eighteen sea anchors, six training collars and ten life rafts should satisfy this requirement.

f. Comment. The problem of swimmer safety during training evolutions (as well as on the actual operation) is always an important consideration. Anytime operations are conducted in warm waters there is always a danger of sharks, and herein lies the greatest danger to the safety of the swimmers.

Recommendation. While the presence of helos overhead can insure the safety of swimmers in most cases, this is not always true when sharks are encountered. It is therefore recommended that whenever possible the ship place a boat in the water and have it stand by to assist the swimmers in such an emergency. It would also be useful in helping the swimmers retrieve equipment such as sea anchors and life rafts during training evolutions.

g. Comment. A great deal of difficulty was encountered during the actual recovery concerning the miscellaneous equipment the swimmers were required to carry. No adequate means of carrying items such as radios, swimmer interphones, hatch tools and cameras has been developed. Consequently, such items were attached by lanyards to the swimmers' life jackets and pushed under their wetsuit or life jacket. Once in the water the lines became entangled, making it difficult to utilize such equipment when needed. In one case the lines became so entangled that they had to be cut with the attendant loss of a radio.

Recommendation. It is recommended that a convenient means of carrying these items be developed which provides easy access while

insuring against possible loss. The best place to carry such items is on the thigh region of the swimmers legs. A device such as the "Saddle Bags" worn by aviators would likely be satisfactory after slight modification. Fitted pockets for each item to be carried would make access easier and a lanyard (approx. 4-5 ft.) attached to each piece of equipment and secured by means of a hook to the pocket would insure against loss.

## LIST OF RECOVERY TEAM BILLET ASSIGNMENTS

| | |
|---|---|
| Officer in Charge | First Lieutenant |
| Assistants | 1st Division Officer<br>2nd Division Officer |
| Rigging and Procedures | BMCS & BMC |
| Boat Officer | 3rd Division Officer |
| Boat Crew | Coxswain--BM2<br>Bowhook---SN<br>Engineer--MM2<br>Signalman-SM3 |
| Retrieving Line | BM1, 14 SN |
| Tripping Line | BM3, 3 SN |
| Forward Steadying Line | BM3, 3 SN |
| Aft Steadying Line | BM3, 3 SN |
| High Speed Whip | BM1, 2 SN |
| Dolly Handlers | 4 SN, 4 AN |
| Collar Handlers | BM3, 10 SN |
| Fire Hose Crews | 4 AN, 4 FN |
| Crane Operators | 2 MM3 |
| Elevator Operators | 2 AN |
| Tillie Operator | 1 AN |
| Tractor Driver | 1 ASE3 |
| Forklift Operator | 1 ASM3 |

Attachment (1) to Enclosure (5)

## COMMUNICATIONS SUMMARY

1. CONCEPT

a. Communications Plan. The Apollo Eight Communications Plan was designed to furnish reliable communications and to test the feasibility of operations in a remote Mid-Pacific area. In order to accomplish the former, an elaborate circuit plan was promulgated, making use of multiplex equipment in an attempt to conserve frequencies and communications assets. The latter goal was necessitated by the possibility of operations extending deep into southern latitudes. In the early planning stages it was decided to compare the long haul capabilities of the Primary Recovery Ship mounted ATCU-100A with the known capability of the USS ARLINGTON (AGMR-2). The limited availability for future operations of an AGMR dictated the necessity of developing a capability that could furnish reliable, long haul communications. The comparative testing was controlled by CTF-130 and initially consisted of sampling the simultaneously keyed ATCU and AGMR circuits at NAVCOMMSTA HONO. Later tests consisted of 24 hour periods, assigned by CTF-130, during which the ATCU and AGMR were keyed separately.

b. The primary Apollo circuit was a 12 KHZ package consisting of the following 3 KHZ slots:

(1) Teletype tone package

(a) Channel 1 - order wire (ATCU/AGMR-Hono)

(b) Channel 2 - CTF-130 communications coordination

(c) Channel 3 - CTF-130 command and control

(d) Channel 4 - press

(e) Channel 5-6-7-8 - spare

(2) NASA - PRS voice

(3) CTF-130 command and control voice

(4) CTF-130 communications coordination voice auxiliary circuits consisted of:

(a) Circuit A - Primary command and control. This originally was not an assigned PRS circuit but evolved into a back-up command and control circuit between PRS and CTF-130. This circuit was keyed by PRS transmitters.

(b) Circuit H - Secondary Recovery Control Center common. This was assigned as a listening circuit for use as a back-up rescue aircraft control circuit.

(c) Circuit R - HF Astronaut primary voice relay. During the final practice period and actual recovery, this circuit was used as a back-up Command and Control link between PRS and CTF-130.

(d) Circuit C - task group common.

(e) Astronaut voice primary secondary - UHF circuits for use between CM, recovery aircraft and PRS.

(f) Astronauts voice UHF relay - A UHF circuit relayed simultaneously with circuit R by E1B aircraft.

c. Tactical Circuits. Due to the distance separating COCHRANE from YORKTOWN and ARLINGTON, and the paucity of UHF equipment aboard ARLINGTON, tactical circuits were limited to the following:

(1) Fleet common

*(2) Primary maneuvering and warning

*(3) Military aircraft emergency

* These circuits were dropped from ARLINGTON in later phases to allow use of UHF for the Apollo circuit link between PRS and AGMR. Communications between the PRS and the AGMR were excellent throughout the mission. Outages, though rare, occurred between the AGMR and Hono, or between Hono and KUNIA.

(4) Task Group common

d. Press Circuit. The press teletype circuit was a tone package channel which was extended through NAVCOMMSTA HONO to CTF-130 at Kunia. During peak press traffic periods and press circuit down time, press was routed over command and control and traffic channel circuits.

2. MODES OF OPERATION

a. ATCU-100A The ATCU-100A was designed as the primary means of communications between the PRS and CTF-130 via NAVCOMMSTA HONO. Original installation plans for the ATCU-100A support circuitry provided for hook-up to four stations, separate from the ship's remote radio stations (RPS's). These consisted of an amplifier (C-745A/FRT-15) and a desk-type handset, and were located as follows: (Amplification was provided on the transmit side only)

(1) Flag Plot - 2 FRT-15

(2) Sickbay - 1 FRT-15

(3) Hangar Bay #2 - 1 FRT-15

(4) Crash and Salvage Locker - 1 FRT-15

The requirements set forth for the Apollo 8 Recovery mission necessitated the installation of an additional FRT-15 remote in FOC and two additional FRT-15's in Sickbay. In that the ATCU-100A was initially designated the primary communications link, a requirement was generated to enable the ATCU transmitters to be modulated by ship's remotes, allowing for simultaneous keying of the ATCU and ship's transmitters.

The ATCU-100A vans were located in hangar bay #2, starboard side, and all facility control functions were coordinated between the ship's facility control and the ATCU control van by means of an intercom system and ship's service telephones.

The ATCU-100A vans utilized the Project Gemini discone-discage transmitting antenna and on the receive side were assigned the use of one SRA-12B antenna coupler and two ship's receive antennae. The ATCU-100A operated properly and good communications were achieved. Problems resulting from the placement of the Discone-discage antenna and the power levels required for operation are discussed in paragraph 4.d.

b. AGMR Relay. The circuits designated to be relayed by the AGMR are the same circuits shown in paragraph 2a. In addition, to Apollo dedicated circuits, the AGMR terminated a ship/ship Romulus traffic channel and a UHF voice orderwire. The PRS/AGMR link was designed to be HF, but experimentation proved that UHF links introduced less atmospheric noise and therefore UHF transmit, PRS to AGMR, was utilized for the last simex and the actual recovery. The AGMR to PRS receive link remained HF due to UHF equipment limitations on the AGMR.

c. YORKTOWN Transmit-Direct. This mode of operation was intended to be used as an alternate path when simultaneously keying the ATCU transmitters. In addition to the Apollo package, ship's transmitters were used full time on all UHF Circuits, TG Orestes, HICOM, RASPBERRRY, TG Common, Circuit Hotel, Circuit Romeo, Circuit Alfa (on call), TV Satellite Orderwire (on call), and PRS/AGMR Romulus.

When directed by CTF-130, ship's transmitters were used to back up the Apollo package for command and control. In addition, back up circuits for Hotel and Romeo were sometimes required.

d. ATS-1 Satellite Terminal. An ATS-1 satellite terminal was installed aboard YORKTOWN prior to departure from CONUS. The installation consisted of a VHF transceiver, mounted in the pilot house, and a six foot helix antenna mounted on top of the navigation bridge. The installation was tested on a scheduled basis and was used during the recovery as an alternate command and control circuit.

e. Combination. The above modes of operation were tested in various combinations throughout the mission. The chronology of configuration was as follows:

18 Dec - keying AGMR circuits-ATCU in test

19 Dec - keying AGMR and ATCU simultaneously

20 Dec - keying AGMR and ATCU simultaneously

201730Z - ATCU secured due to RF charge on B and A crane

201830Z - ATCU up

21 Dec - keying AGMR and ATCU simultaneously

22 Dec - 222200Z - ATCU secured. Keying AGMR

23 Dec - 232201Z - ATCU up and simultaneously keying own transmitters.

242201Z - ATCU secured. Keying AGMR

242245Z - Commenced keying ATCU and AGMR simultaneously

25 Dec - Keying AGMR and ATCU simultaneously

26 Dec - Keying AGMR and ATCU simultaneously

27 Dec - 271300Z - Secured ATCU Keying AGMR

271400Z - ATCU up-simultaneously keying ATCU and AGMR

271415Z - Secured ATCU keying AGMR

271500Z - ATCU up-simultaneously keying AGMR and ATCU

271515Z - ATCU secured-keying AGMR

3. PROBLEM AREAS

a. Compatibility. The ATCU-100A was designed to operate independently of the ship's communication system. The original installation allowed for voice modulation of the ATCU transmitters only by way of the C745/FRT-15 remote units. There was, however, provision for two full duplex teletype channels originating in the facilities control room. In order to ensure reliable communications and to allow for comparative testing, the requirement to simultaneously key ATCU and AGMR circuits was imposed. This requirement necessitated the following modifications to provide compatibility for the two systems:

(1) Transmitter patch panel tie-ins to allow for the use of ship's remotes on ATCU transmitters and FRT-15 remotes on ship's transmitters.

(2) Additional audio leads between facility control and the ATCU van to allow for patching ship's receivers into the FRT-15 system.

(3) Isolation relays installed on the ship's unclassified teletype patch panel to isolate ship's panel batteries from the ATCU keying link.

(4) Installation of an impedance matching transformer in the ATCU to restore audio levels attenuated by the addition of remote stations in the FRT-15 system.

b. Coordination

(1) Experimentation with modes of operation posed patching problems due to lack of familiarity by operators of the added modifications and "jury rigs". An excessive amount of time was required each time a termination shift was required.

(2) Further problems occurred due to ship's controllers not being familiar with the patching capabilities and modes of operation of ATCU. All send and receive audio to the C745/FRT-15 remotes had to be patched thru the ATCU.

(3) A final communications plan was not received until approximately twelve hours prior to splashdown.

(4) The Press TTY circuit was frequently logged out by CTF-130 due to bad copy. Investigation of the monitor roles on the ARLINGTON by YORKTOWN personnel revealed near perfect copy being received from YORKTOWN.

c. News Media Requirements. A requirement for a Television Voice Order Wire for General Electric was placed on ship's force but location of remote station was not known until 15 December. At this time a cable was installed from aft of the island on the flight deck to Flag Plot on the forward part of the 07 level, where it was "wired" into one of the ship's remotes.

d. Radio Frequency Interference

(1) On commencement of circuit checks by General Electric and ABC TV, complaints were received about RF interference rendering audio video, and tracking circuits unusable. These reports of interference were forwarded to CTF-130 on 23 December. During alternate tests of ATCU and AGMR, YORKTOWN personnel, G.E. Techs., and ABC Techs. conducted RFI tests with the ATCU. The results of the tests were forwarded to CTF-130 on 24 December and are contained in subparagraph e, below.

(2) Twelve hours before splashdown, permission was obtained to secure the ATCU, however 15 minute tests were scheduled by CTF-130 during final test phase of TV coverage. Each time the ATCU was keyed G.E. reported loss of acquisition of the satellite. Final acquisition of satellite was obtained 5 seconds before live coverage began. It was also discovered that the Mutual Broadcasting Company transmissions were causing moderate interference to G.E. transmitter relays.

e. RFI Tests Aboard YORKTOWN

(1) The following are results of test conducted aboard YORKTOWN from 230200Z to 231000Z:

(a) The following equipment tested in all possible combinations:

1. ATCU transmitter "A"

2. ATCU transmitter "B"

3. AN/SPS-30

4. AN/SPS-37

(b) Measurements and observations made:

1. AN/PSM-4 from boat and aircraft crane hook to #3 elevator and from #3 elevator to ship's hull.

2. ABC technicians' observations of interference in video and audio amplifiers between TV vans located in hangar bay #2.

3. General Electric technicians' observations of interference with video and audio signals, serve drive mechanism, intercom, and ground station transmitter.

(c) Results Obtained

1. Voltage measurements taken from B and A crane hook to elevator #3 and elevator #3 to ship's hull with PSM-4 on 500V A.C. scale were in excess of 500V when either ATCU transmitter was being keyed, regardless of frequency. While these readings were being taken, a ship's electronics technician received a minor RF burn on his hand from the crane hook. A shorting wire from #3 elevator to the B and A crane hook drew an arc that increased in length as the ATCU's transmitter decreased in frequency.

2. ABC TV technicians observed interference through their video and audio amps that rendered their signal unusable when the ATCU was transmitting below 12 MHZ.

3. General Electric technicians observed interference with either radar in operation. This did not render any of their equipment unusable. With either ATCU transmitter keyed, however, interference increased and with most frequencies rendered either part or all of their equipment unusable. (Interference was greater at lower frequencies and high power setting of ATCU transmitters.)

4. At 241600Z General Electric was unable to turn on the SHF earth station transmitter because the high voltage protection relay was activated from the modulation from the low frequency ATCU transmitter. During a temporary shutdown of this HF transmitter, General Electric was able to bring up their earth station to transmit video to the satellite. However, when the ATCU transmitter came on again, the video delivered to the GE/WUI terminal was completely unusable.

(2) At the beginning of observations and throughout the entire testing period, AN/SPS-6 and ship's own transmitters were in operation. No unusual interference was observed to be generated by these sources.

4. Recommendations

a. The final communications plan should be instituted well in advance to allow complete checkout of circuits and equipment. A minimum of circuits should be used to allow concentration of efforts on maintaining good communications. This final plan should be as specific as possible and adhered to rigidly. Net Control must be positive.

b. A detailed study of ships communications assets and limitations should be conducted before the promulgation of a communication plan. This plan should limit requirements to designed capabilities of ship's equipment. The communications plan should not assume that the ship can meet arbitrary requirements with untested "jury rigging". Modifications to ship's equipment should be promulated well enough in advance to allow shipyard installation and check out.

c. All civilian and NASA requirements should be included in detail in the communications plan. Any changes in these requirements should be submitted to the task force commander, who would be aware of the ship's limitations, for further promulgation by message.

d. It is recommended that simplex circuit stations be used. Duplex operation does not allow remote station operations to determine if a transmission is being made from elsewhere on the ship, resulting in dual transmissions. Furthermore, simplex operation has the obvious advantage of requiring half as many frequencies.

e. (1) In the southern latitudes of the Pacific it is recommended that the AGMR be used. It is also recommended that a PRS/AGMR UHF/HF relay be used.

(2) In Pacific area northern latitudes, the ship's transmitter should be used.

(3) In both cases, it is recommended that an ATS terminal be installed by the shipyard with a miximum of two remotes hard wired. Further, it is recommended that an ATS repairman be embarked.

f. It is recommended that the ATCU not be embarked due to incompatibility with simultaneous TV and radio broadcast. In addition, RF static charge on the B and A crane from discone/discage antenna fed by ATCU, can cause a dangerous situation for capsule recovery personnel, and could possibly activate spacecraft pyrotechnics.

g. In view of the incompatibility of TV broadcast and any high power radio transmission, it is recommended that satellite communication be used for command and control and coordination circuits.

h. All circuits required by the communications plan should be manned at all times once they have been set up.

## PUBLIC AFFAIRS SUMMARY

1. NASA, CTF 130 and YORKTOWN PAO's worked very closely together preparing and presenting all Public Affairs activities to the press pool. The PAO organization included a head NASA PAO and three assistant NASA PAO's; a TV coordinator; a photographer coordinator, and a newsroom coordinator. A CTF 130 representative served as a buffer between news pool requests submitted through NASA and the ship. He made all final decisions on granting permission for news personnel to take flights on a space available basis in YORKTOWN aircraft and coordinated an afternoon press jaunt to the Communications ship, ARLINGTON.

2. Two officers, a Lieutenant Commander and a Lieutenant (junior grade) from the ship's company, coordinated the ship's PAO efforts. Six enlisted personnel were available to run the press room. All six were utilized during peak periods. The press room was open from 0600 through 0300 each day and remained open on a 24-hour basis throughout the 72-hour period preceeding the recovery. With movies, television, and other entertaining evening diversions, evening use of the press room was very light. This enabled the night PAO crew to produce a daily newspaper. Nine additional helpers were required to assist the TV and photography representative on the day of recovery. This additional help consisted of two officers and seven enlisted men.

3. One enlisted petty officer was in charge of logging all press releases and routing copies from the Communications teletype repeater located in the press room. A minimum of two messengers were utilized to run press releases to Communications and assist writers and photographers around the ship.

4. One hundred and fifty-four press messages and 39 administrative messages were sent to Communications for transmitting. Press traffic totaled 288 pages. The average time between receipt of messages in Communications and acknowledgement of receipt from Houston was three hours and 48 minutes.

5. Two briefings were conducted daily. Each briefing included status reports from the ship's meteorologist and the ship's navigator. The Operations Officer kept newsmen up to date on upcoming exercises and their results. Each briefing contained a report from a minimum of one key person involved in the recovery. The use of maps, charts, slides and other visual aides was strongly encouraged and assisted greatly in getting messages across. All important material was duplicated and handed out to newsmen at the completion of each briefing.

6. Newsmen were given specially conducted tours of strategic areas of the ship during their first four days aboard. Pool technicians were unable to break away from their work so tours scheduled for them were canceled. All newsmen had an opportunity to eat with the Commanding Officer and in the Chief's Mess and Crew's Mess.

7. YORKTOWN's regular channels were used to pass on information to the crew and embarked civilians. However, an added emphasis was put on the 1MC. The Plan of the Day, ship's newspaper (containing both shipboard and national news), a 1MC PAO Noon News Summary, and a half hour TV news broadcast were all run daily.

8. Special entertainment during the Apollo 8 mission included a talent show, a bridge tournament, volleyball tournaments and bingo games. Participation from pool personnel was light, but the TV pool did televise the talent show, and after professional editing presented a polished version over the ship's closed circuit TV system.

9. The schedule of activities for the astronauts on 27 December 1968 was:

| | |
|---|---|
| 0618 | Astronauts arrive YORKTOWN via helicopter. |
| 0621 | Commanding Officer opens flight deck ceremony with "Welcome Aboard" and presentation of YORKTOWN ball caps to astronauts. Astronauts briefly address ship's company. |
| 0630 | Astronauts cross flight deck between honor cordon to No. three elevator and through the Marine cordon in hangar bay three to medical spaces. |
| 0638 | Astronauts talk with President Johnson by telephone. |
| 1140 | Astronauts complete initial medical examination and proceed via port side to Hangar Deck to view Command Module. |
| 1150 | Astronauts proceed to quarters in Admiral's country via Hangar Deck and Admiral's ladder. |
| 1200 | Astronauts lunch with Commanding Officer. |
| 1750 | Commanding Officer and Astronauts proceed to Wardroom. |
| 1800 | Evening meal commences in Wardroom. |
| 1840 | Ceremonies commence in Wardroom. Remarks by Astronauts. Presentation of ship's plaques. |
| 1900 | Astronauts proceed to Hangar Bay One in company with Commanding Officer, Executive Officer, and Supply Officer. |
| 1905 | Hangar Deck Ceremony commences with introduction of Astronauts to crew. Captain Lovell presides over reenlistment ceremony. Supply Officer presents YORKTOWN cake. |

1935 Astronauts proceed to quarters to resume debriefing.

10. The schedule of activities for the astronauts on 28 December 1968 was:

0700 Astronauts arrive in Medical spaces for further tests.

1015 Astronauts proceed to CPO Mess for brunch.

1045 Astronauts proceed to starboard rail for viewing by ARLINGTON.

1120 Two COD aircraft depart YORKTOWN; scheduled to arrive Hickam Air Force Base at 1430W.

## CIC SUMMARY

1. Advance Planning and Training. YORKTOWN's CIC Apollo organization was basically complete in November and tested by the use of disclosure cards for efficiency of information flow. This advanced planning and training gave CIC a degree of confidence and allowed the CIC Apollo Team to obtain maximum benefit from the scheduled simulated exercises.

2. CIC Procedures. In reading the following refer to the accompanying CIC Apollo Plan and Key.

a. All incoming information from external and internal sources was passed through the Air Watch Officer and/or Surface Watch Officer to the Evaluator. The CIC Circuit Coordinator passed all pertinent information to CTF 130 on the Command and Control Circuit. All transmissions over Astro Voice Primary also went directly to CTF 130 through the UHF-HF relay set up through one of the two airborne E-1B's.

b. Radar information and homing information from the aircraft were passed to both the DRT and the Apollo Plotter by the Air Controller Assistant on the 22JS and 21JS sound power circuits. This allowed datum information to be generated.

c. The CIC/NASA Coordinator insured that a smooth complete flow of information was maintained between CIC and NASA representatives located in the Flag Operation Center.

d. The Air Force Air Controller passed all pertinent information concerning the Rescue Aircraft including their position and contact reports to the CIC/NASA Coordinator.

e. Other positions on the diagram are self explanatory. It is apparent from the CIC diagram that there is a maximum back-up capability in case any primary circuit becomes inoperative.

3. Apollo 8 Recovery Items. Some miscellaneous items of interest to note in Apollo procedures are:

a. All aircraft and the ship were directed to turn up range at five minutes prior to time of entry to facilitate visual acquisition of the command module.

b. Fire control radar was the most reliable source of ranges and bearings to the command module after it was in the water.

c. The SPS-30 radar was put in standby at splash-down as was the SPS-37 radar as soon as datum was established to prevent interference with live TV coverage.

d. As indicated in enclosure (1) and elsewhere, the command module landed within 5000 yards of YORKTOWN with SPS-37 radar contact held from 280 miles almost to splash-down. Radar tracking was shifted to the MK-56 fire control radar in the command module descent phase which resulted in accurate positioning prior to and at splash-down.

e. Aircraft search plans for distant datum contingencies were promulgated for use if the need occurred. A good guide for formulating these plans is contained in CTF 140 1-68 Op Plan.

f. The most important enlisted position in the CIC Apollo Team was the Apollo Plotter. Among his duties were plotting the position and contact bearings of the Rescue Aircraft, and continually updating YORKTOWN's positions by direct coordination on the 22JS so that radar bearings and range information was rapidly converted to latitude and longitude. His information was the most accurate for establishment of datum or deriving range and bearing information to the command module for aircraft vectors.

4. Comments and Recommendations

a. Comment. Recovery and Rescue aircraft call signs are so similar they lead to confusion.

Recommendation. The call sign of Recovery aircraft should be changed to HELO.

b. Comment. Individual departure and arrival reports were not required by CTF 130.

Recommendation. This practice be continued and be delineated in the operation order for the next mission.

c. Comment. Astro Primary Circuit became congested with transmissions not directly concerned with recovery operations.

Recommendation. Provide second UHF Transceiver for Helos so they can monitor and be controlled on a discrete frequency other than Astro Primary.

d. Comment. CPX SIMEX's and actual SIMEX's were not scheduled at a consistent time.

Recommendation. Have all SIMEX's during the same time frame that the recovery is scheduled. Also, use the same Primary Command and Control, and HF Relay frequencies. This gives maximum realism to exercises and an opportunity to check these circuits for effectiveness in the desired time frame.

## STATIONS (KEY)

| NUMBER | TITLE | COMMUNICATIONS |
|---|---|---|
| 1 | EVALUATOR | |
| 2 | CIC CIRCUIT COORDINATOR | PRIMARY COMMAND & CONTROL |
| 3 | SURFACE WATCH OFFICER | 1JS |
| 4 | AIR WATCH OFFICER | |
| 5 | COMMUNICATOR | |
| 6 | CIC/NASA COORDINATOR | |
| 7 | G.L.O. | JCTF |
| 8 | ECM OFFICER | |
| 9 | AIR FORCE CONTROLLER | SRCC |
| 10 | AIR CONTROLLER | ASTRO VOICE |
| 11 | AIR CONTROL ASSISTANT | 22JS, 23JS, 21JS |
| 12 | AIR CONTROLLER (RELAY COORD) | AIR CONT. "A" |
| 13 | AIR SEARCH OPERATOR | 22JS |
| 14 | AIR SEARCH OPERATOR | 22JS, 23JS |
| 15 | HEIGHT FINDER | 22JS, 23JS |
| 16 | VERTICAL PLOTTER | 22JS |
| 17 | APOLLO PLOTTER | 22JS |
| 18 | AIR STATUS PLOTTER | 22JS, 2JG |
| 19 | BOGEY PLOTTER | 22JS |
| 20 | URD 4 OPERATOR | 22JS |
| 21 | ECM OPERATOR | ECM GEAR |
| 22 | ECM ALTERNATE | 23JS |
| 23 | ECM PLOTTER | 23JS |
| 24 | SURFACE SEARCH OPERATOR | 21JS |
| 25 | SURFACE PLOTTER | 21JS |
| 26 | MANEUVERING BOARD | 21JS |
| 27 | LOOKOUT TALKER | JL |
| 28 | SKUNK PLOTTER | 21JS |
| 29 | SURFACE SUPERVISOR | |
| 30 | ASTRO VOICE RECORDER | ASTRO VOICE |
| 31 | ASTRO VOICE SEC, RECORDER | ASTRO VOICE SEC |
| 32 | PRIMARY COM & CONTROL RECORDER | PRIM. COM & CON |
| 33 | PRI TAC RECORDER | PRI TAC |
| 34 | TG COM RECORDER | TG COM |
| 35 | SRCC RECORDER | SRCC |

ADDITIONAL STATIONS NOT SHOWN
1 OFFICER TO DIRECT PLOTTING ON NC-2
1 OFFICER TO DIRECT & ASSIST FLOW OF RECORDED RADIO REPORTS
1 ENLISTED YN TO ASSIST WITH REPORTS
2 LOOKOUTS ON 010 LEVEL ON JL
5 LOOKOUTS ON 07 LEVEL ON JL
1 NAVIGATION TALKER ON 22JS
1 VERTICAL PLOTTER ON BRIDGE ON JL
1 AIR PLOTTER ON BRIDGE ON 22JS

| BOARD | USE |
|---|---|
| A | END OF MISSION PRIMARY RECOVERY DIAGRAM |
| B | IFF & EQUIPMENT STATUS |
| C | CALL SIGNS |
| D | AIR EVENTS - LAND/LAUNCH INFORMATION |
| E | BOGEY TOTE, BINGO, & ENTRY SEQUENCE |
| F | VERTICAL PLOT RELATIVE TO SPLASH POINT |
| G | SKUNK TOTE |
| H | ECM TOTE |
| I | COMMUNICATIONS |
| J | MISCELLANEOUS INFORMATION |

# CIC APOLLO PLAN

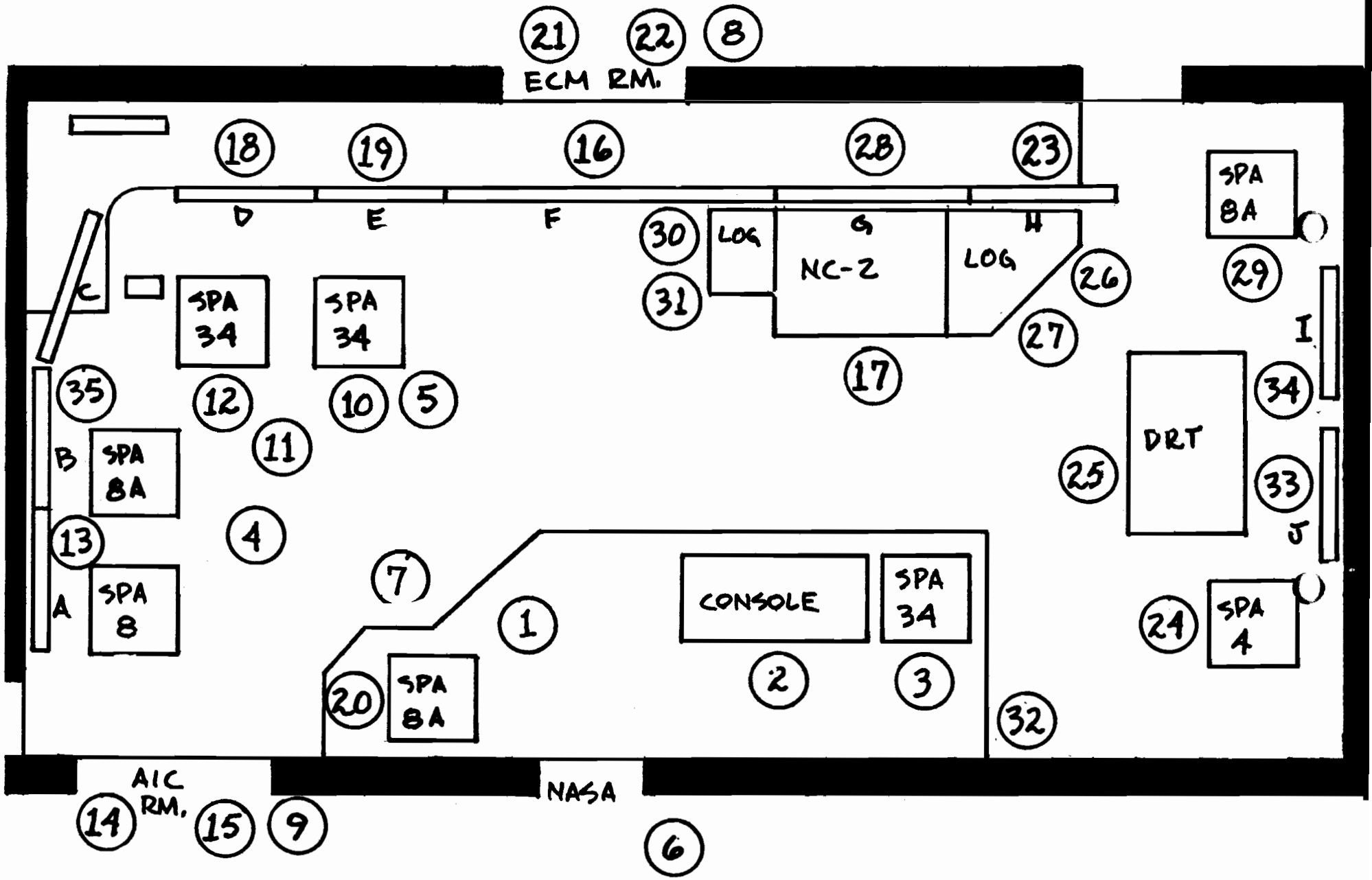

## ENGINEERING SUMMARY

1. Electrical. The mission placed a heavy burden on the Electrical Division. Over 10,000 feet of cable and 1,000 manhours of labor were required to supply the news media and NASA personnel with power, lighting and intercommunications.

2. Auxiliaries and Repair Divisions. Auxiliary and Repair Division personnel required 370 manhours to complete miscellaneous requirement of NASA and the news media. Some of the major items manufactured were:

a. A large camera platform on 07 level of island structure, which required 400 feet of angle iron and 8 sheets of one half inch plywood, and covered the forward lookout station. Total area covered was about 150 square feet.

b. Two forklift platforms for use as TV camera platform and service platform.

c. A cooling water hookup for GE electronics equipment on the flight deck.

d. Tables, tool boxes, steps and platforms.

Additionally, the "R" Division provided welding services, refilled CO2 bottles for NASA, issued various tools and equipment, and repaired miscellaneous items in support of the civilian personnel embarked.

3. Comments and Recommendations

a. Comment. The large quantity of manhours required by E Division to provide the services requested by the news media and NASA reduced that division's ability to perform necessary corrective maintenance on the ship's electrical installations.

Recommendation. That the services requested by the news media and NASA personnel be screened to insure vital functions are performed without overcommitting E Division personnel.

b. Comment. A great majority of the items manufactured by Auxiliaries and Repair Division were of no value to the ship after their initial use.

Recommendation. That standard size platforms for forklifts, steps for debarkation from the helo, tables for sickbay and toolboxes be included in the standard recovery kit. This will prevent adding additional expense and manhours on each mission.

## SUPPLY SUMMARY

1. Pre-deployment Preparation. Supply Department activity in preparation for the APOLLO 8 mission commenced approximately six weeks prior to deployment. The first area to receive special attention was spare parts support of selected equipments. Departments were requested to identify those equipments considered essential to the APOLLO recovery, and to recommend special increase in allowed repair parts. The Supply Department conducted a comprehensive review of allowed repair parts for these special equipments and initiated procurement action for deficient items. These requisitions were closely monitored and aggressive expediting action taken to obtain the best possible delivery. At the same time a general review of all allowance parts lists (APL's) was accomplished and normal replenishment action was taken. The majority of repair parts were received and there were no significant CASREPTS during the deployment.

2. APOLLO Recovery Aircraft. Regarding supply support of APOLLO recovery aircraft, it was necessary to obtain a special AVCAL from COMNAVAIRPAC. The YORKTOWN had previously off loaded much of the normal load of repair parts and special support equipment. A total of approximately 2,235 replenishment requisitions were submitted, and closely monitored and expedited by the ship. The majority of support items had been received prior to deployment, and there were no downed aircraft due to lack of parts during the mission.

3. Berthing and Messing. Personal berthing and messing of NASA and news media civilian personnel received a great deal of close attention. As no Flag and only a partial air group was embarked many accomodations not normally available during a deployment were vacant. All civilian visitors on board during the recovery were berthed and fed in the Wardroom. It was necessary to request an augmentation of stewards for the duration of this deployment in order to provide adequate services to the civilian passengers. At the request of the ship, NASA provided a list of personnel who would ride the YORKTOWN indicating relative seniority. Room assignments were made accordingly and to everyone's satisfaction. This contributed to the harmonious relationship between the ships officers and the civilian guests. The three Astronauts were berthed in the Admiral's and Chief of Staff's cabins, and used the Flag Mess for much of their de-briefing. The privacy of this area was extremely desirable, both from the personal requirements of the Astronauts and from NASA's interest in isolation.

4. Post-mission Report. A post mission report of expenses and operation requirements is required to support financial reimbursement by NASA to the Navy. Daily recording of steaming, operating, training, and loading times as well as OPTAR expenditures is recommended to insure complete reimbursement.

5. Recommendation. Due to the importance of providing impressive service in berthing and messing of NASA and News Media civilian personnel, it is recommended that an adequate number of steward ratings be obtained to augment the ships allowance.

## GENERAL COMMENTS AND RECOMMENDATIONS

1. Comment. Pre-deployment lead time was minimal for the Air Group, and specifically for the E-1B detachment. Installation of the Apollo Communications Relay Package required approximately 48 man-hours per aircraft; the fourth installation was completed only seven working days prior to deployment, and was not fully functional until four days prior. No regularly assigned personnel were qualified to service the ARC-94; two technicians TAD from CVSG-59 reported only 4 days before deployment. Further, only three weeks' notice was provided for the accomplishment of the myriad administrative details that should precede deployment: e.g., preparation of service records, health and dental records and inoculations, pay records and personal affairs.

a. Recommendation. That designation of recovery force units take place a minimum of two months prior to anticipated deployment date.

2. Comment. No up-to-date OPORDER or LOI was available to the E-1B detachment prior to arrival in Pearl Harbor.

a. Recommendation. That Commander, Carrier Airborne Early Warning Wing ELEVEN (CCAEWWING 11) be added to the distribution list for all CTF 130 Manned Spacecraft Recovery publications and changes. A minimum of three copies would suffice.

3. Tongue-in-Cheek Comment. The CTF 130 emblem shows a helicopter, an HC-130, a destroyer and a carrier, but no E-1B.

a. Recommendation. That the E-1B's significant role be recognized by including a "Fudd" silhouette in the CTF 130 emblem.

4. Comment. Weather reconnaissance flights utilizing YORKTOWN's C-1A aircraft provided invaluable data in determining the location and movement of the Intertropical Convergence Zone (ITCZ).

a. Recommendation. In view of YORKTOWN's success in obtaining weather information, it is recommended that PRS aircraft be utilized for weather reconnaissance flights for future missions terminating in the vicinity of the ITCZ. If not feasible to employ PRS resources, a requirement for low level penetration of the ITCZ should be levied by CTF 130 on the cognizant data collecting agency.

5. Comment. YORKTOWN's Post Office processed in excess of 28,000 pieces of mail on 27 December 1968, the day of the Apollo 8 recovery. Every piece of mail bore the specially designed Apollo 8 cachet and YORKTOWN post mark. As YORKTOWN had only two postal clerks aboard, it was impossible to maintain normal stamp and money orders sales which inconvenienced the crew and the NASA and news media personnel embarked.

Additionally, it was impossible to honor the request of many collectors for hand cancellation. Another problem was caused by heavy usage of the cachet. Twice, the handle fell off, rendering it useless for periods of several hours while repairs were made.

a. Recommendation. The Post Office of the primary recovery ship should be augmented to insure that at least six postal clerks are on board. This would enable the Post Office to maintain normal service while processing the tremendous volume of mail generated by events of major philatelic interest. It is also suggested that at least four cachets be provided so that more people can work at the same time.

6. Comment. The reenlistment ceremony held on board on the 27th was well received by those participating, and may have been an incentive to reenlist for at least one of the participants.

a. R ecommendation. The reenlistment ceremony could be expanded to include reenlistees of the other units in company. Advance work should be done by all units to request authorization for lump sum VRB, schools and duty assignments as soon as possible for all potential reenlistees. The program should be well organized and publicized, and personnel from other ships should be ready for helicopter pick-up as soon after the recovery as possible for airlift to the primary recovery ship. The Navy Astronaut, if any, should be asked to officiate.

7. Comment. The many TAD personnel and civilians on board created personnel accounting problems on the days that the ship left port.

a. Recommendation. The coordinating agency within NASA should furnish an advance list including: Full names, the next of kin, the number of days each will be embarked, relationship and address of next of kin of those coming aboard. These lists can be updated on the days that the ship leaves port.