NAVAL AIRCRAFT

DAUN

The Douglas-built *Dauntless* scout dive-bomber played a leading role in Pacific battles during WW II. At the outset, SBD's from *Enterprise* were credited with knocking down several Japanese *Zeros* during the attack on Pearl Harbor. SBD's next participated in U.S. carrier raids on Japanese-held islands and figured significantly in the Battle of the Coral Sea, the first naval engagement in history in which the opposing fleets never came in sight of one another.

The *Dauntless'* greatest day was June 4, 1942, when, during the Battle of Midway, SBD's from *Enterprise* and *Yorktown* sank four Japanese carriers. For the first two years of the war, the SBD was the mainstay of the Navy's carrier-based bombing force. By late 1943, SB2C's were being introduced as replacements.

The SBD traces its origin to the Northrop XBT-1 of 1935, procured in small numbers as the BT-1 in 1938. Northrop had become a division of Douglas, and the improved XBT-2 became the prototype for the SBD *Dauntless*. The first production order placed in April 1939 resulted in delivery of SBD-1's to Marine squadrons, and SBD-2's to *Enterprise* and *Lexington* squadrons during 1941.

The SBD-3 appeared in March 1941 with .50 cal. cowl-mounted guns replacing the previous .30 cal. and with self-sealing gas tanks and armor. Other modifications through SBD-6 followed with the last of 4,368 Navy SBD's delivered in July 1944. In October 1945, the last *Dauntless* was retired from active service.

Though not designed as fighters, SBD's are credited with destroying 138 enemy planes in aerial combat, a large share by rear seat gunners. A total of 953 *Dauntless* served with the Army Air Corps as A-24's.

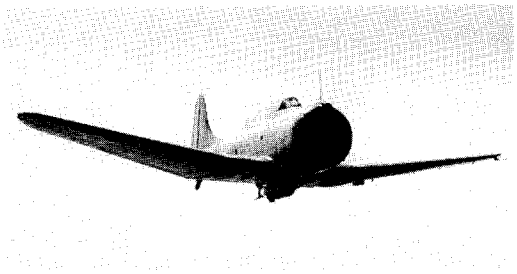

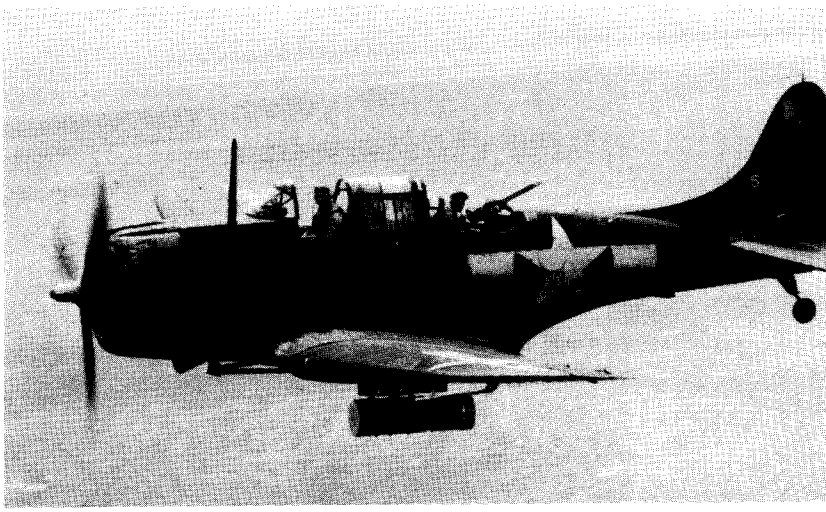

TLESS

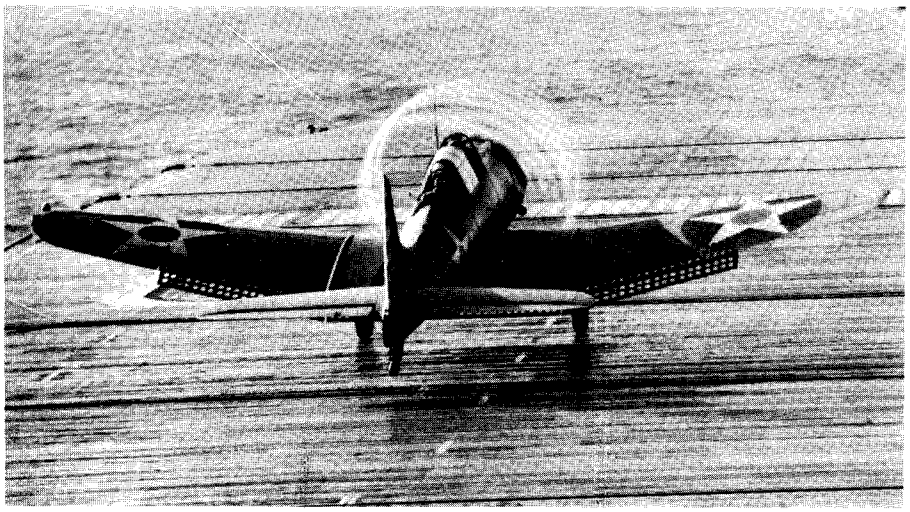

Length	
SBD-1/-2	32'2"
SBD-3/-4	32'8"
SBD-5/-6	33'0"
Height (tail down)	12'11"
Wing span	41'6"
Engine/horsepower	Wright Cyclone 9-cylinder radial
SBD-1/-2	R-1820-32, 1,000 hp
SBD-3/-4	R-1820-52, 1,000 hp
SBD-5	R-1820-60, 1,200 hp
SBD-6	R-1820-66, 1,350 hp
Maximum speed	
SBD-1/-4	245 mph
SBD-5/-6	252 mph
Ceiling	26,000'
Range	
SBD-1	985 st. mi.
All others	1,400 st. mi.
Armament	Two .50 cal. fixed forward, one or two .30 cal. flexible mounted in rear cockpit, 1,600 pounds of bombs on swinging bomb cradle under fuselage and 325 pounds on each of two under-wing stations.
Crew	Pilot and observer/gunner

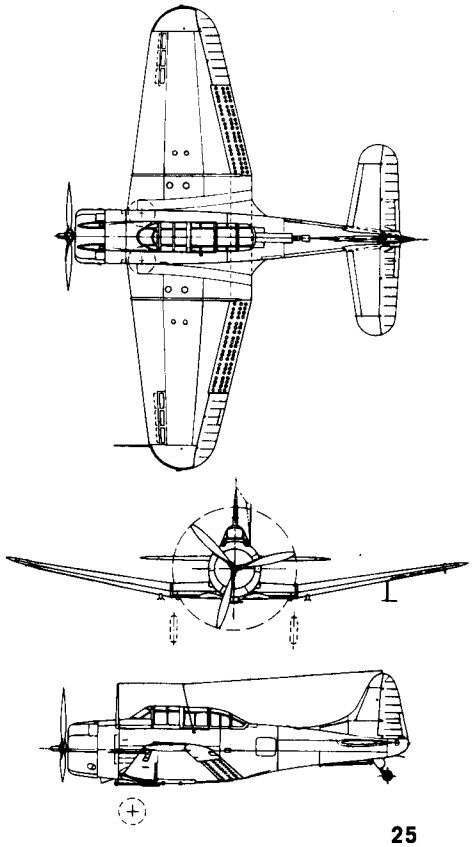

SBD Dauntless

By Hal Andrews

Without question, the epitome of carrier tactical aircraft in terms of combat results achieved is the WW II Douglas SBD *Dauntless*. During 1942, the first year of the war in the Pacific, *Dauntless* aircrews, flying their dive-bombing attacks and taking advantage of those times when fortune smiled on them, sank a total of six Japanese carriers in three separate battles. Four of these went down at Midway, the first major WW II defeat for the Japanese Imperial Navy.

Rugged, simple, and a fine flying machine, SBDs were a mainstay of the carrier air groups through two and half years of the war, and with the Marines in their island campaigns until the war's last weeks. While not a fighter, it was no slouch in air-to-air combat. Records are incomplete, but its crews were credited with well over a one-to-one kill ratio against the Japanese opponents. Many of these were the vaunted Mitsubishi A6M *Zeros*; the rear seat radioman-gunner aircrewmen, firing their flexible .30-caliber machine guns, accounted for a good share. Flown extensively by the Army Air Force and air forces of other countries, it saw limited combat service with them and was never as successful as it was with the Navy and Marines for whom it was created. In fact, contrary to one of aviation's standard myths that the Marines always got the old Navy airplanes, Marine squadrons were the first to receive the brand new SBD-1s in 1940.

Carrying over from the Northrop BT-1s from which it was developed (*Naval Aviation News*, September-October 1989), the SBD was an all-metal, low-wing monoplane with most features typical of its time. Powered by a Wright-R-1820 Cyclone engine, the engine as used in the SBD was developed from an initial 1,000-hp rating to 1,350 hp in the final SBDs built. This increase overcame much of the impact of ever-increasing weight as equipment, armor, and armament were added to meet wartime needs.

The pilot had two forward-firing machine guns, either .30 or .50-caliber in the SBD-1s, mounted ahead of the cockpit and synchronized to fire through the propeller's arc. The crewman had a single, flexible .30, later replaced by a twin .30 mount. One bomb, up to 1,000 lbs., could be carried in the centerline rack; the displacement gear fork swung down to release it below the propeller arc in a dive. One wing rack under each wing could carry up to a 325-lb. depth bomb.

Ordered from the Douglas El Segundo Division (which the original Northrop Company had become) in April 1939, the SBD-1's design underwent extensive revisions based on the continuing flight development of the XBT-2 prototype. While definition of desirable stability and control characteristics was in its infancy, an iterative process involving both company and Navy test pilots was undertaken to provide flying qualities that would not require special piloting skill, especially "around the boat."

Late in the design period, concern over flight characteristics with maximum fuel and military load led to a decision to move the engine forward five inches to ensure longitudinal stability. All the effort would pay off in an airplane that wouldn't require either changes or special piloting concerns as it grew with wartime equipment/armament additions and changes.

With the pressure of war in Europe, the option for additional production SBDs was exercised, and completion of the second production SBD expedited so that it could join the first in the company flight development and demonstration testing and subsequent Navy Board of Inspection and Survey (BIS) trials. Flight testing at El Segundo was in May 1940, including final tuning of the new configuration using both airplanes; the second was resplendent in the colorful markings of VMB-2's squadron commander, a practice for production airplanes at the time that would be lost forever with Naval Aviation's subsequent wartime expansion. Preliminary demonstrations were completed at El Segundo and both aircraft were ferried to NAS Anacostia, D.C., in early June for Navy BIS trials.

With demonstration tests completed, Navy trials started at Anacostia in late June using the first SBD-1, the second going to the Naval Aircraft Factory (NAF) at Philadelphia, Pa., in early July for carrier-type tests. Using the shore-based catapult and arresting systems there, it would conduct this phase of the trials.

On July 23, the SBD program suffered one of its few setbacks. During a dive test with a 1,000-lb. bomb, the flotation bags inflated, resulting in excessive shock and vibration, rapidly followed by engine failure. While the pilot was uninjured in the subsequent forced landing, the first SBD went back to Douglas for extensive repairs. The second returned from the NAF to complete the dive and bomb-dropping tests, going back and finishing arresting tests by mid-August. With the usual range of items for correction, the newest scout bomber was ready for service.

Deliveries began to VMB-2, which was pleased to replace its fabric-covered, fixed-gear biplanes and to be the first with Naval Aviation's latest modern, high-performance dive-bomber. Following delivery for the Marines of the 57 SBD-1s, 87 SBD-2s were delivered, most going initially to Navy carrier squadrons starting in late 1940. With increased fuel capacity and deletion of the alternate provision for .30-caliber guns in place of the two cowl-mounted synchronized .50s, these were otherwise essentially identical to the -1s. Before they were delivered, 174 SBD-3s had been ordered. Their main changes were armor protection and self-sealing fuel tanks, reflecting early European combat experience, and these were later backfitted to many earlier SBDs.

Deliveries of -3s continued through 1941, with orders for a duplicate Army version as the A-24 adding to the total. A different paint scheme and a pneumatic tail wheel – the latter also used on land-based SBDs in lieu of the standard solid rubber one – were the obvious differences. However, major increases in production of the *Dauntless,* as the Navy named the SBD in September, weren't scheduled. The new SB2A and SB2C dive-bombers under development received these large orders.

Pearl Harbor changed everything and SBDs were ordered in the hundreds, supplemented by additional A-24s. By Spring 1942, *Dauntless* production had begun its big increase as the first carrier aircraft battle of naval forces took place in the Coral Sea. There and in June at Midway, the victorious dive-bomber crews flew either -2 or -3 *Dauntlesses*; at Midway, most of the gunner's single .30 flexible machine guns had been replaced with

SBD-5

new twin guns – later installed on all SBDs. Before the end of the year, SBD crews had accounted for a sixth Japanese carrier in the eastern Solomons and played a significant role in successfully defending our Guadalcanal bases. Production switched in the fall to the SBD-4, featuring a 24-volt electric system in place of 12-volt to accommodate greater electrical power demands of the increased wartime electrical systems.

Additional power in the R-1820 series engines became available in 1943, 1,200 hp versus 1,000 hp for takeoff, much needed to accommodate the increasing weight – and drag – of the wartime configurations. The revised engine installation in the SBD-5s included a new cowling, eliminating the top-mounted airscoop of the earlier *Dauntlesses*. ASB radar, with its YAGI array antennas under the outboard wing panels, already being installed on fleet SBDs, became standard on later -5s. Radar added new capabilities – and a new task for the rear seat crewman. Twin external wing tanks could also be carried, replacing the field installed single wing tank provisions on the left wing bomb racks of the earlier airplanes.

Increased armament was one focus of attention through most of the SBD's wartime service. Racks carrying multiple small bombs were fitted to the two wing bomb racks for ground attack. Later provisions for carrying a 1,600-lb. armor-piercing bomb on the center rack were qualified, though not for catapulting. Pods carrying twin .50 guns were developed to be carried on the wing bomb racks, though infrequently used in combat. More often used were rockets mounted on underwing racks installed between the bomb racks and the radar antennas. As with other carrier aircraft, photo versions of the SBDs were provided by field modification, P models of all series being built, with SBD-3Ps most numerous. The camera installation was in the lower aft fuselage, as in most WW II carrier combat types.

SBD-5s were ordered in the thousands as introduction of the SB2C was further delayed. The pace of production increased, reaching 350 or more a month in mid-1943. It was supplemented by additional A-24s for which production was shifted to Douglas' Tulsa, Okla., plant. A further increase in R-1820 power, dependant on higher octave fuel, became available. A single -5 became the XSBD-6 with the 1,350-hp -66 engine, and the last 1,450 -5s on order were shifted to - 6s. By early 1944, the SB2Cs were finally in combat in numbers, and the final 1,000 SBD-6s were canceled as production began to wind down. The last SBD-6s were delivered in August, after carrier combat operations had ended in June.

Marine squadrons continued to use SBDs, mostly -5s and -6s, in island combat operations for another year, particularly in support of Army ground forces in the Philippines. Offshore Navy patrol squadrons also used SBDs in many areas. As the island campaigns in the Pacific wound down, so did the SBD's employment, the final Marine *Dauntless* squadrons being withdrawn August 1, 1945. All SBD operations were rapidly phased out as the war ended.

In addition to the U.S. services, several other countries operated *Dauntlesses*, either SBDs or A-24s, though in limited numbers. The Free French were the largest foreign wartime users, SBD's being flown by both Army and Navy squadrons. One New Zealand squadron also flew SBDs in the Southwest Pacific, though only for a limited period. A small number went to Britain but were never operational. Others, all A-24s, were used by Mexico and Chile. France continued to fly *Dauntlesses* in combat as fighting began in Indochina, finally retiring them in 1949. The Latin American *Dauntlesses* continued flying into the fifties.

The few remaining in postwar service here were in various test roles. The last Navy SBD was operated at the Navy's flight test activity (by then the Naval Air Test Center, Patuxent River, Md.) as had been the first. In May 1948, it was flown out to be put in storage for the National Air (and Space) Museum, where it can be seen today, proudly posed as in flight in the Sea-Air Gallery.

With the advent of the Air Force's current YF-22 and 23 Advanced Tactical Fighter prototypes, it's interesting to note that the handful of Army *Dauntlesses* still in use when the Army Air Force became the U.S. Air Force were redesignated as F-24s, since the Air Force didn't have A series attack aircraft prior to the 1962 joint services designation system.

SBD

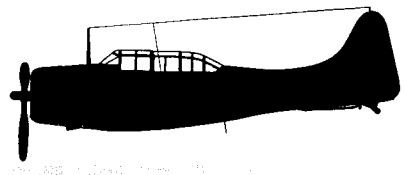

Length	
SBD-1/-2	32'2"
SBD-3/-4	32'8"
SBD-5/-6	33'0"
Height (tail down)	12'11"
Wing span	41'6"
Engine/horsepower	Wright Cyclone 9-cylinder radial
SBD-1/-2	R-1820-32, 1,000 hp
SBD-3/-4	R-1820-52, 1,000 hp
SBD-5	R-1820-60, 1,200 hp
SBD-6	R-1820-66, 1,350 hp
Maximum speed	
SBD-1/-4	245 mph
SBD-5/-6	252 mph
Ceiling	26,000'
Range	
SBD-1	985 st. mi.
All others	1,400 st. mi.
Armament	Two .50 cal. fixed forward, one or two .30 cal. flexible mounted in rear cockpit, 1,600 pounds of bombs on swinging bomb cradle under fuselage and 325 pounds on each of two under-wing stations.
Crew	Pilot and observer/gunner

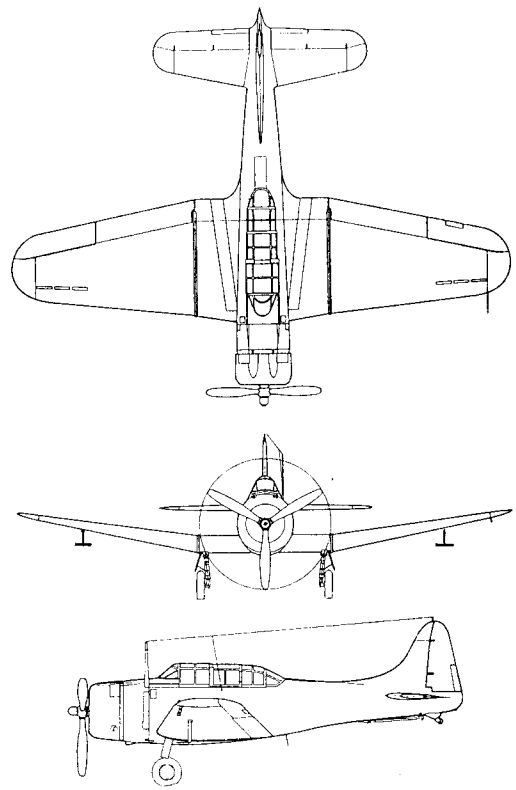

DECLASSIFIED

ISSUE OF 6 PAGES

AIRPLANE CHARACTERISTICS & PERFORMANCE

BUREAU OF AERONAUTICS, NAVY DEPT.

COLUMN NUMBER		1	2	3	4
LOADING CONDITION		BOMBER 1-1000#	BOMBER 1-1000#	BOMBER 1-500#	BOMBER 1-500# TWO TANKS EXTERNAL
GROSS WEIGHT	LBS.	10403	10403	9903	10701
EMPTY WEIGHT - Actual -	LBS.	6533			
FUEL/OIL	GALS.	254/16	254/16	254/16	370/16
FIXED GUNS/AMMUNITION		2-.50 cal./360 rds.			
FLEXIBLE GUNS/AMMUNITION		2-.30 cal./2000 rds.			
ENGINE POWER USED FOR PERFORMANCE		MILITARY	NORMAL	NORMAL	NORMAL
WING LOADING	LBS./SQ.FT.	32.1	32.1	30.5	33.0
POWER LOADING ①	LBS./BHP.	10.4	11.6	11.0	11.9
V-MAX. SEA LEVEL	MPH.	238	221	224	212
V-MAX. AIRPLANE CRIT. ALT.	MPH.	252/13800	244/15700	248/15700	232/15700
V-STALL GROSS WEIGHT ②	MPH.	79.8	79.8	77.8	80.9
V-STALL. WITHOUT FUEL ②	MPH.	73.6	73.6	71.6	72
TIME-TO-CLIMB -10000 FT.-	MIN.	7.4	8.8	8.0	9.6
TIME-TO-CLIMB -20000 FT.-	MIN.	19.1	23.3	20.4	26.4
SERVICE CEILING	FT.	24300	24100	25100	23200
TAKE-OFF DISTANCE -CALM-	FT.	1225	1225	1073	1324
TAKE-OFF DISTANCE -15 KN.-	FT.	800	800	682	877
TAKE-OFF DISTANCE -25 KN.-	FT.	570	570	480	625
TAKE-OFF TIME	SECONDS				
RATE OF CLIMB -SL-	FT./MIN.	1700	1280	1400	1200
MAX. RANGE/V-AV. ③	ST.MI/MPH.		1115/139	1115/138	1345/138
BOMBING RADIUS/V-AV -20%R-	NMI/KN.				
BOMBING RADIUS/V-AV -33%R-	NMI/KN.				
PATROL RADIUS/V-AV -20%R-	NMI/KN.				
PATROL RADIUS/V-AV -33%R-	NMI/KN.				
SCOUT RADIUS	N MI.				
COMBAT RADIUS	N MI.		240	260	420

ENGINE/PROP. GEAR RATIO W. A. C. R 1820-60 (3:2)

ENGINE RATING BHP/RPM/ALT.	MILITARY	NORMAL	TAKE OFF
	1200/2500/S. L.-1900	1000/2300/S. L.-5800	1200/2500
	1000/2500/8100-13800	900/2300/9300-15700	

TANKAGE IN GALLONS		OIL	FUEL
AUX. FIXED	PROTECTED	16	254
	UNPROTECTED		
	TOTAL-FIXED INTERNAL	16	254
	DROPPABLE		
	DROPPABLE Wings 2@58		116
	TOTAL	16	370

NOTE
- STATUTE MILES USED-EXCEPT-RADIUS IS GIVEN IN NAUTICAL MILES & KNOTS
- ① BHP AT MAX. CRIT. ALT.
- ② STALL-WITHOUT POWER
- ③ AT 1500' ALTITUDE

OFFENSIVE ARMAMENT

FUSELAGE (EXTERNAL)
Bombs:
1-1600#; 1-1000#; 1-500#
Depth Bombs:
1-650#; 1-325#
WINGS (EXTERNAL)
Bombs:
2-100#
2-325#

Changes incorporated: Contract through AF
: Service through 40

Supersedes 8/1/43

DATE 1 June 1944

[redacted]

MODEL SBD-5

 [redacted] [redacted] MODEL- SBD-5

NAVAER-15198 (Rev. 4-44)

AIRPLANE CHARACTERISTICS & PERFORMANCE

BUREAU OF AERONAUTICS, NAVY DEPT.

COLUMN NUMBER		5	6	7	8
LOADING CONDITION		BOMBER 1-1600#	SCOUT	SCOUT TWO TANKS EXTERNAL	BOMBER** 1-500# PLUS 8-5" ROCKETS
GROSS WEIGHT	LBS.	10439	9352	10148	10700
EMPTY WEIGHT - Actual -	LBS.	6533			6689
FUEL/OIL	GALS.	165/12	254/16	370/16	254/16
FIXED GUNS/AMMUNITION		2-.50 cal. /360 rds.			
FLEXIBLE GUNS/AMMUNITION		2-.30 cal. /2000 rds.			
ENGINE POWER USED FOR PERFORMANCE		NORMAL	NORMAL	NORMAL	NORMAL
WING LOADING	LBS/SQ.FT.	32.1	28.8	31.2	32.9
POWER LOADING (1)	LBS./BHP.	11.6	10.4	11.3	11.9
V-MAX. SEA LEVEL	MPH.	221	229	216	209
V-MAX. AIRPLANE CRIT. ALT.	MPH.	244/15700	255/15700	239/15700	230/15700
V-STALL. GROSS WEIGHT (2)	MPH.	79.9	75.6	78.8	89.8
V-STALL. WITHOUT FUEL (2)	MPH.	75.9	69.1	69.6	83.2
TIME-TO-CLIMB -10000 FT.-	MIN.	8.8	7.2	8.4	9.6
TIME-TO-CLIMB -20000 FT.-	MIN.	23.3	17.7	21.8	26.4
SERVICE CEILING	FT.	24000	26100	25000	23200
TAKE-OFF DISTANCE -CALM-	FT.	1238	920	1148	1469
TAKE-OFF DISTANCE -15 KN.-	FT.	810	570	740	994
TAKE-OFF DISTANCE -25 KN.-	FT.	578	390	523	727
TAKE-OFF TIME	SECONDS.				
RATE OF CLIMB -SL-	FT./MIN.	1280	1550	1330	1190
MAX. RANGE/V-AV. (3)	ST.MI./MPH.	680/145	1225/153	1565/140	840/146
BOMBING RADIUS/V-AV -20%R-	NMI/KN.				
BOMBING RADIUS/V-AV -33%R-	NMI/KN.				
PATROL RADIUS/V-AV -20%R-	NMI/KN.				
PATROL RADIUS/V-AV -33%R-	NMI/KN.				
SCOUT RADIUS	NMI.		305	400	
COMBAT RADIUS	NMI.	95			215

PERFORMANCE IS BASED ON - FLIGHT TEST

RANGE & RADIUS ARE BASED ON FLIGHT TEST FUEL CONSUMPTION DATA INCREASED BY 5 PERCENT TO CONFORM WITH PAST EXPERIENCE.

PRACTICAL COMBAT RADIUS is based on 20 min. warm up and idling; 1 min. take off; 20 min. rendezvous at 60% normal sea level power (n.s.p.) and auto lean; climb to 15000 ft* at 60% n.s.p. and auto lean; cruise out at 15000 ft. at 60% n.s.p. and auto lean; drop unprotected droppable tanks; dive and drop bombs and torpedoes; combat 5 min. at military rated power plus 10 min. at full normal power; cruise back at 1500 ft. at 170 knots true airspeed and auto lean; 60 min. at V for max. range and auto lean allowed for rendezvous, landing and reserve. Radius includes distance covered in climb but not in descent. Practical Scouting Radius is 1/3 of range at V for max. range at 1500 ft. with fuel taken out for 20 min. warm up, 1 min. take off, and 60 min. rendezvous, landing and reserve.

*For condition 3: Climb to 15000 ft. at 60% n.s.p. and auto lean

For conditions 2, 4, 5 and 8: Climb to 15000 ft. at full normal power and auto lean

**With MK-4 Launchers

For Ferry Condition at gross weight of 9340# with 370 gals. fuel, max. range is 1680 Statute miles at 143 statute m.p.h. at 1500 ft. altitude.

DECLASSIFIED

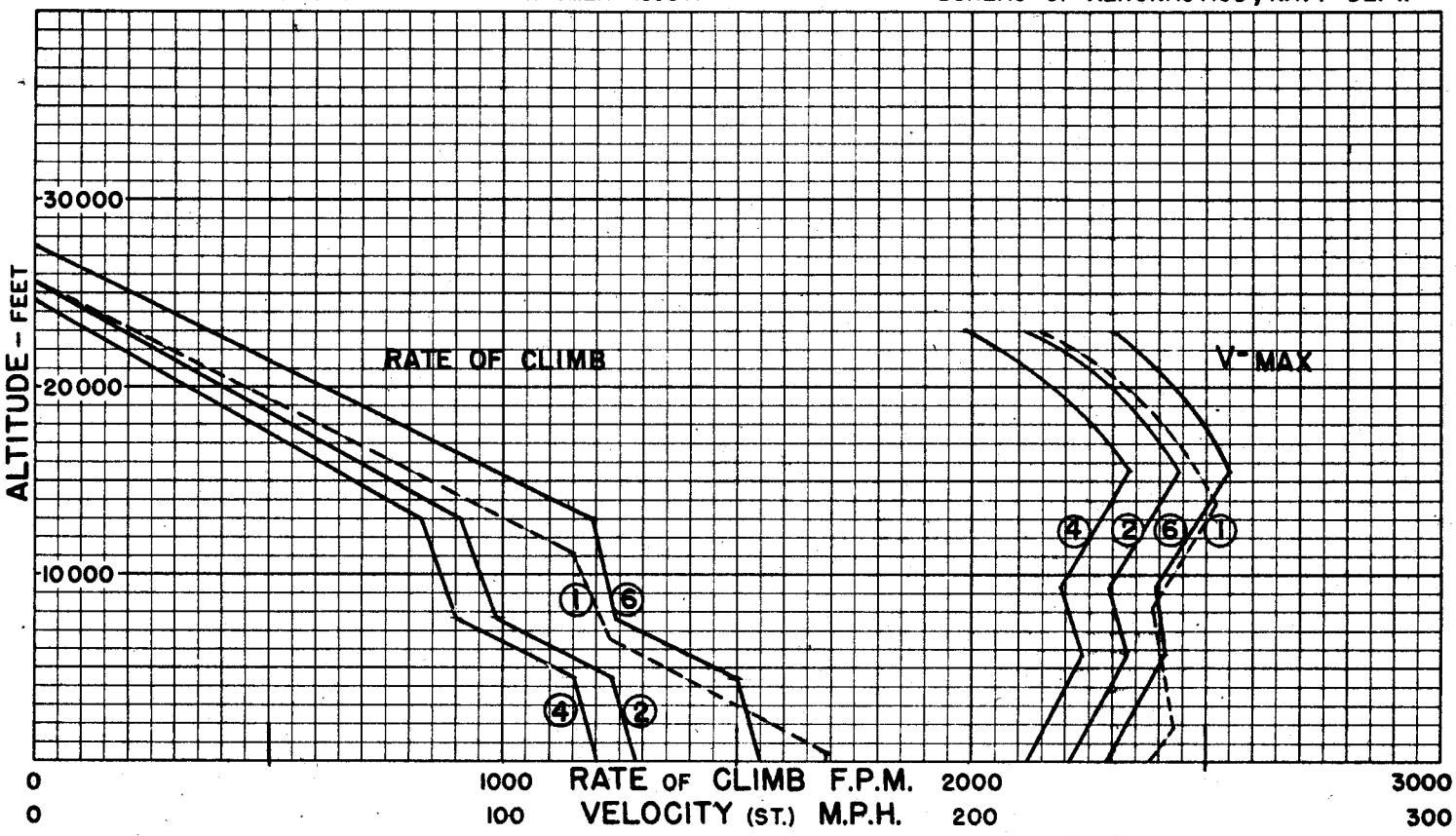

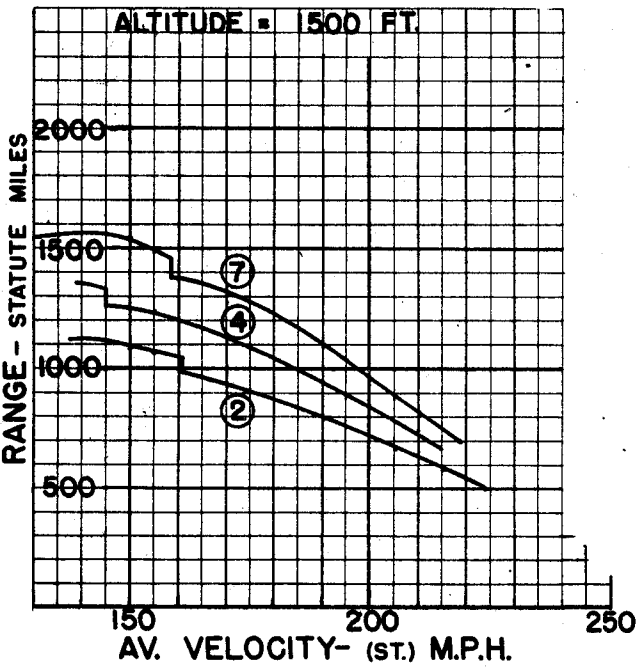

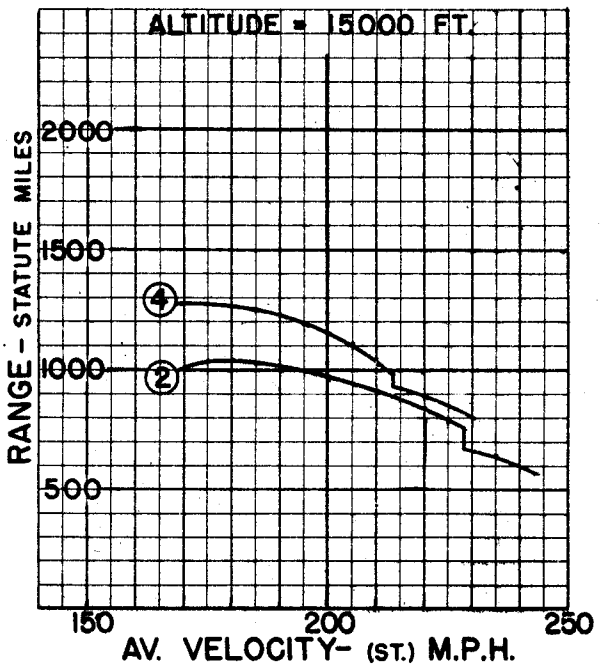

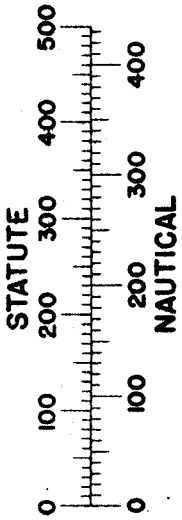

○ LOADING CONDITION COLUMN NUMBER

DECLASSIFIED

BUREAU OF AERONAUTICS
NAVY DEPARTMENT

WING AREA-325 SQ. FT.
WING SECTION-
N.A.C.A 2415-2407
M.A.C.-100.4"
PROP.-HAMILTON STD. C.S.
BLADE DES. NO. 6511A-9
NOTE+
SBD-5 (R-1820-60)
SBD-6 (R-1820-66)

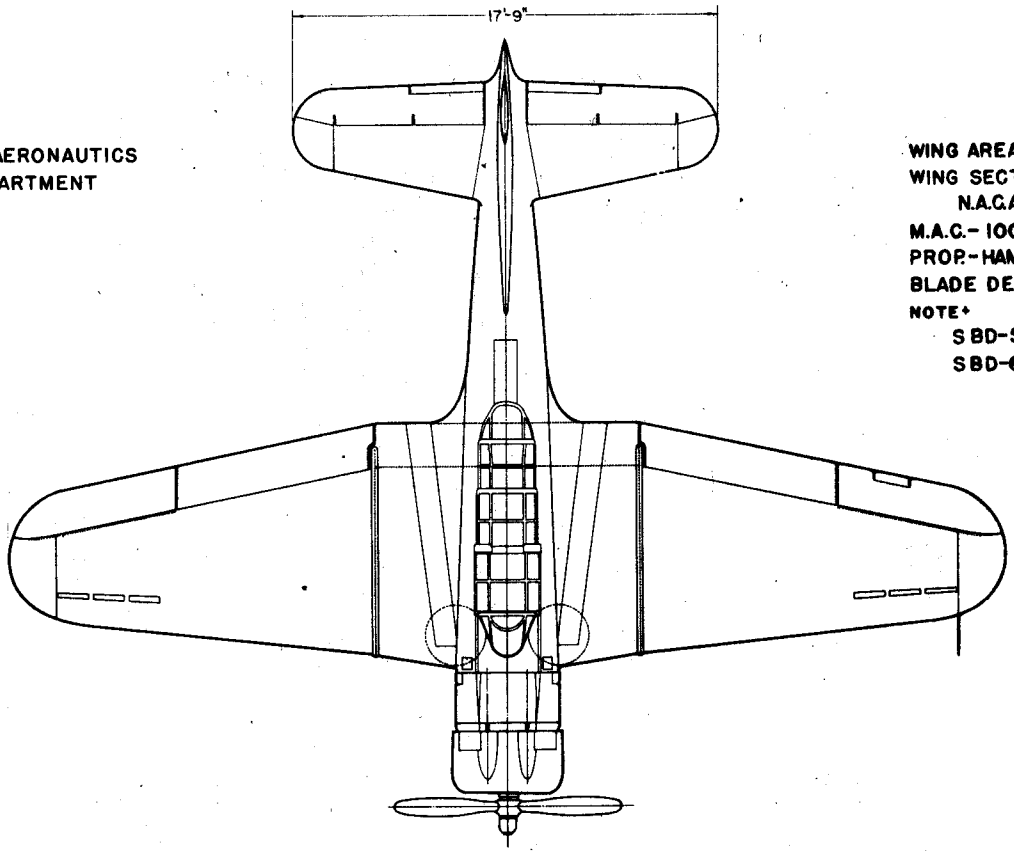

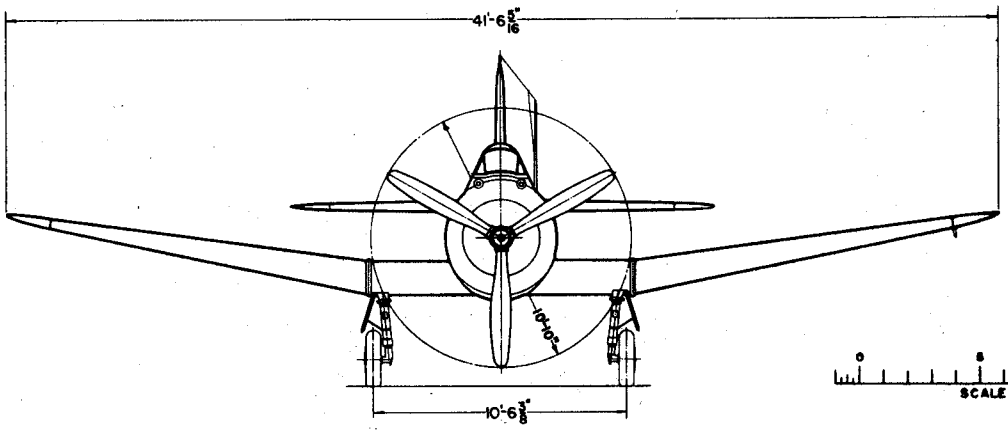

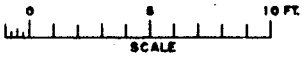

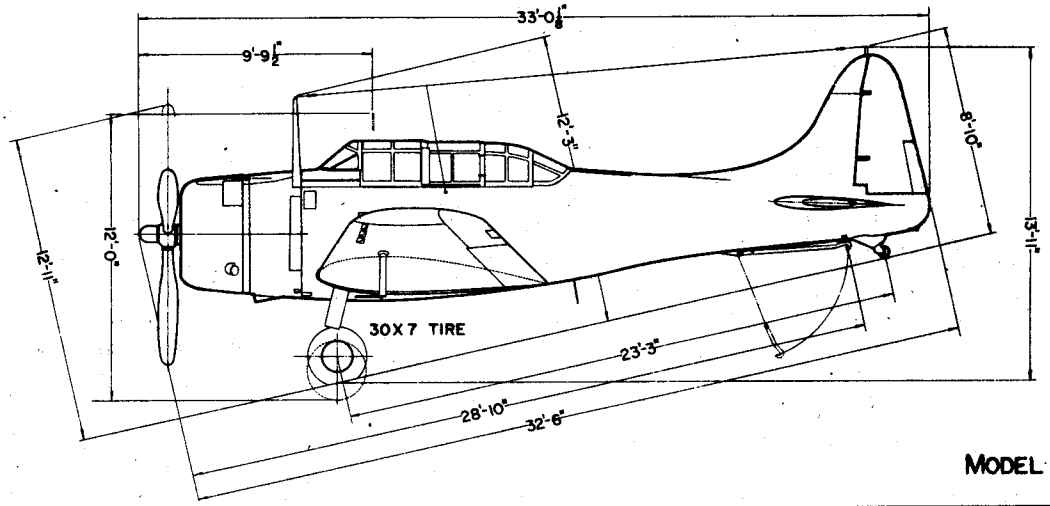

DECLASSIFIED

MODEL SBD-5&-6

MODEL SBD-5 & -6

BUREAU OF AERONAUTICS
NAVY DEPARTMENT

- BULLET RESISTANT GLASS ARMOR PLATE
- DEFLECTION PLATE
- SELF-SEALING TANKS
- NON SELF-SEALING TANKS

PROTECTION

1.	PILOT REAR	99 LBS
2.	PILOT FORWARD	38 LBS
3.	GUNNER	30 LBS
4.	SELF-SEALING CELLS	333 LBS

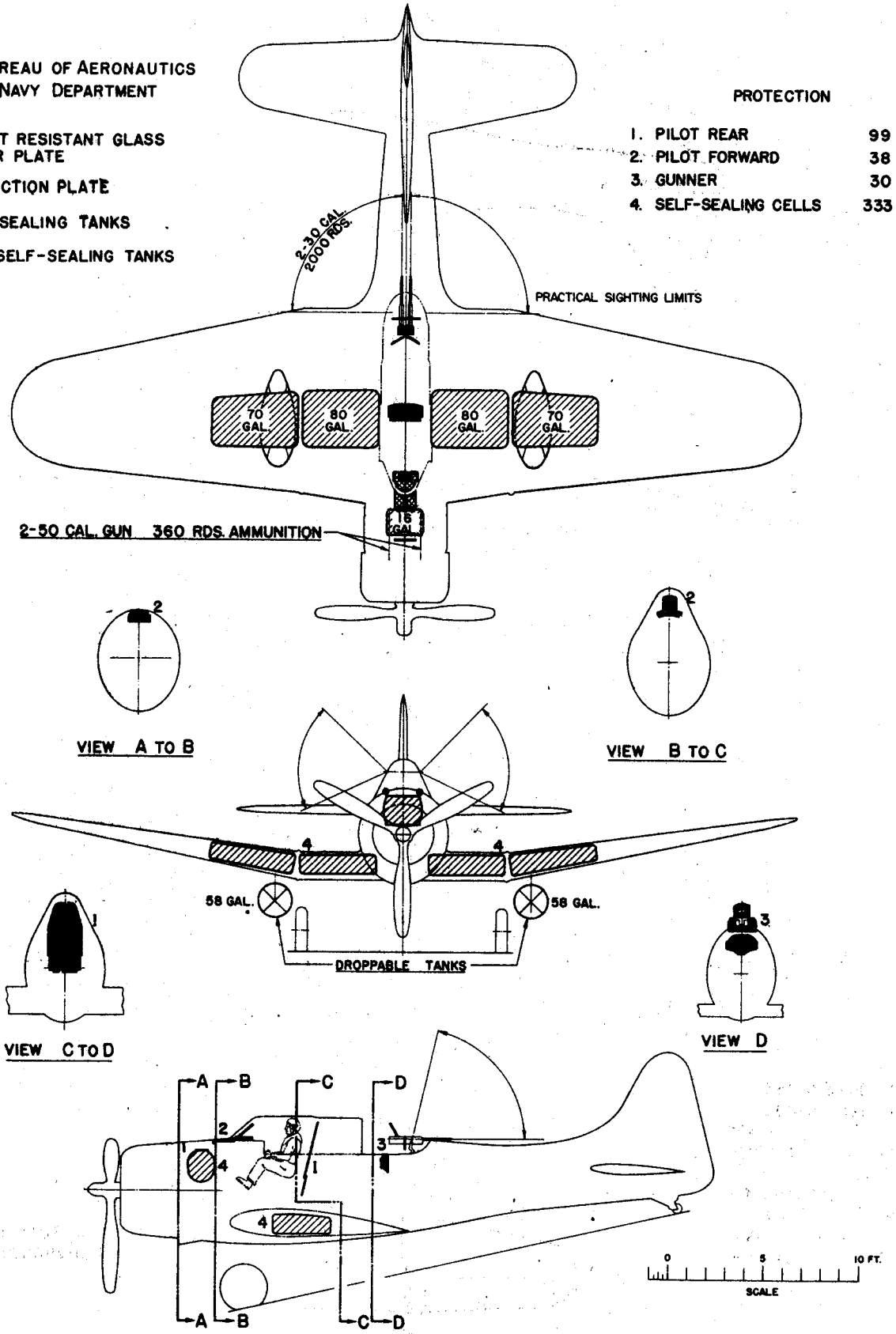

DECLASSIFIED