APPENDIX 1

Aircraft Data— Technical Information and Drawings

Compiled and written by

Dr. William J. Armstrong
Historian
Naval Air Systems Command

A-3 (A3D) Skywarrior

Early in the Second World War, the Navy began to explore the concept of a jet powered aircraft operating from carriers. Success encouraged further development of the concept, and early in the post war years the Navy began to consider jet power as a possible means of operating from carriers, aircraft that were large enough to provide a strategic bombing capability.

In January 1948, the Chief of Naval Operations issued a requirement to develop a long range, carrier-based attack plane that could deliver a 10,000 pound bomb load. The contract which the Navy awarded to the Douglas Aircraft Company on 29 September 1949 led to the development and production of the A3D Skywarrior. Unusually large for a carrier-based aircraft, the A3D quickly earned the nickname whale.

The Navy would never have a strategic bombing role in the defense of the United States, but the 282 Skywarriors which the Navy purchased served well in many roles. And as the last decade of the century began, the KA-3 and EA-3 soldiered on as tankers and electronic warfare aircraft.

First contract	29 September 1949
First flight	22 October 1952
First reported in squadron	By VAH-1 on 31 March 1956
Last delivery	January 1961
Number accepted	282

An A3D-1 Skywarrior, 1956.

Model Designations Accepted from the Manufacturer (New Builds)

XA3D-1:
Experimental aircraft.

YA3D-1:
Prototype aircraft.

A3D-1 (redesignated A-3A):
The primary mission was attack of enemy surface targets. The A-3A had a conventional swept-wing structure, two turbo-jet engines, provisions for a three-man crew of pilot, bomber-assistant pilot and a gunner-navigator. There were provisions for twelve 4,500 pound thrust JATO bottles and for in-flight refueling. The airplane was a conventional swept-wing structure with an all metal wing and a semi-monocoque fuselage. The two turbo-jet engines were enclosed in under-wing nacelles. The tricycle landing gear, arresting gear, wing fold and tail fold mechanisms, single slotted wing flaps and power boost were operated by hydraulic power. The horizontal stabilizer was adjustable for trim in flight.

A3D-2 (redesignated A-3B):
At first designated A3D-1B, the A3D-2 differed from the A3D-1 by additional provisions for a fourth crew member. The leading edge slats were actuated automatically by aerodynamic loads. Anti-skid braking was provided. The JATO installation accommodated twelve 4,500 pound thrust bottles. In-flight refueling and tanker provisions were provided for the A3D-2. The following are technical specifications for the A-3B:

Weight:	
Empty	37,077 lbs
Basic	37,545 lbs
Design	55.942 lbs
Combat	61.377 lbs
Max T.O. (Land)	78.000 lbs
Max T.O. (Cat)	73.000 lbs
Max landing (land)	56,000 lbs
Max landing (carrier)	49.000 lbs
Dimensions:	
Wing area	770 sq ft
Wing span	72.5 ft
M.A.C.	140.14 in
Sweepback	36 degrees
Length	74.7 ft
Height	22.8 ft
Tread	10.4 ft
Ordnance:	
Bombs	twelve 500 pound G.P.
	six 1,000 pound G.P..
	eight 1,600 pound A.P.
	four 2,000 pound G.P.
Mines	twelve 500 pound Mk 50
	six 1,000 pound Mk 36
	four 2,000 pound Mk 25
	two 2,000 pound Mk 10
	six 1,000 pound Mk 52-1
	twelve 374 pound Mk 53-0
	four 2,000 pound XG-7
	one 1,558 pound Mk 12
	four 2,000 pound Mk 39-0
Special stores:	
Guns/ammunition	two 20 mm (M3)/500 rounds per gun
	tail turret system Aero 21B
Radar bomb director	AN/ASB-1A
Power plant:	
Two J57-P10 Pratt & Whitney turbojet dual rotor, axial flow engines.	
Length	158 in
Diameter	41 in
Electronics:	
Radio altimeter	AN/APN-22
VOR homing	AN/ARN-14E
VHF trans-receiver	AN/ARC-27A
TACAN	AN/ARN-21
HF trans-receiver	AN/ARC-38
IFF transponder	AN/APX-6B
Interphone	AN/AIC-4A
Coder	AN/APA-89
UHF direction finder	AN/ARA-25

A3D-2P (redesignated RA-3B):
The production version of the YA3D-2P. This reconnaissance aircraft carried a pressurized camera compartment with twelve camera stations. The compartment also housed camera controls, camera door controls and stowage for spare film magazines. The bomb bay accommodated photo-flash bombs and/or cartridges. Sighting equipment and view-finders were located in the cockpit.

A3D-2C (redesignated EA-3B):
The principal mission of the A3D-2Q was to search for enemy radar. Provisions were made for a crew of seven: pilot, navigator-assistant pilot, gunner-radioman and four ECM operators including an evaluator.

A3D-2T (redesignated TA-3B):
Trainer version.

Other Designations

A3D-1P (redesignated RA-3A):
Same as A-3A except equipped for photography.

A3D-1Q (EA-3A):
Same as A-3A except equipped for countermeasures. Bomb capabilities removed.

VA-3B:

Similar to EA-3B aircraft except certain readily detachable electronic equipments removed from cabin area and the installation of equipment necessary for personnel accommodations.

KA-3B:

Similar to A-3A aircraft except modified to a tanker capability.

EKA-3B:

Model A-3B aircraft configured for the TACOS (Tanker Aircraft/Countermeasures or Strike) mission.

NRA-3B:

An A-3B equipped as test bed for Harpoon and Cruise missile guidance systems.

ERA-3B:

RA-3B modified to fleet electronic warfare support group configuration.

Bureau Numbers

XA3D-1	125412-125413
YA3D-1	130352
A3D-1	130353-130363
A3D-1	135407-135444
A3D-2	138902-138976
A3D-2	142236-142255
YA3D-2P	142256 (Aircraft never accepted)
A3D-2Q	142257 (Aircraft never accepted)
A3D-2W	142258 (Bureau number canceled)
A3D-2	142400-142407
A3D-2	142630-142665
A3D-2P	142666-142669
A3D-2Q	142670-142673
A3D-2	144626-144629
A3D-2P	144825-144847
A3D-2Q	144848-144855
A3D-2T	144856-144867
A3D-2	147648-147668

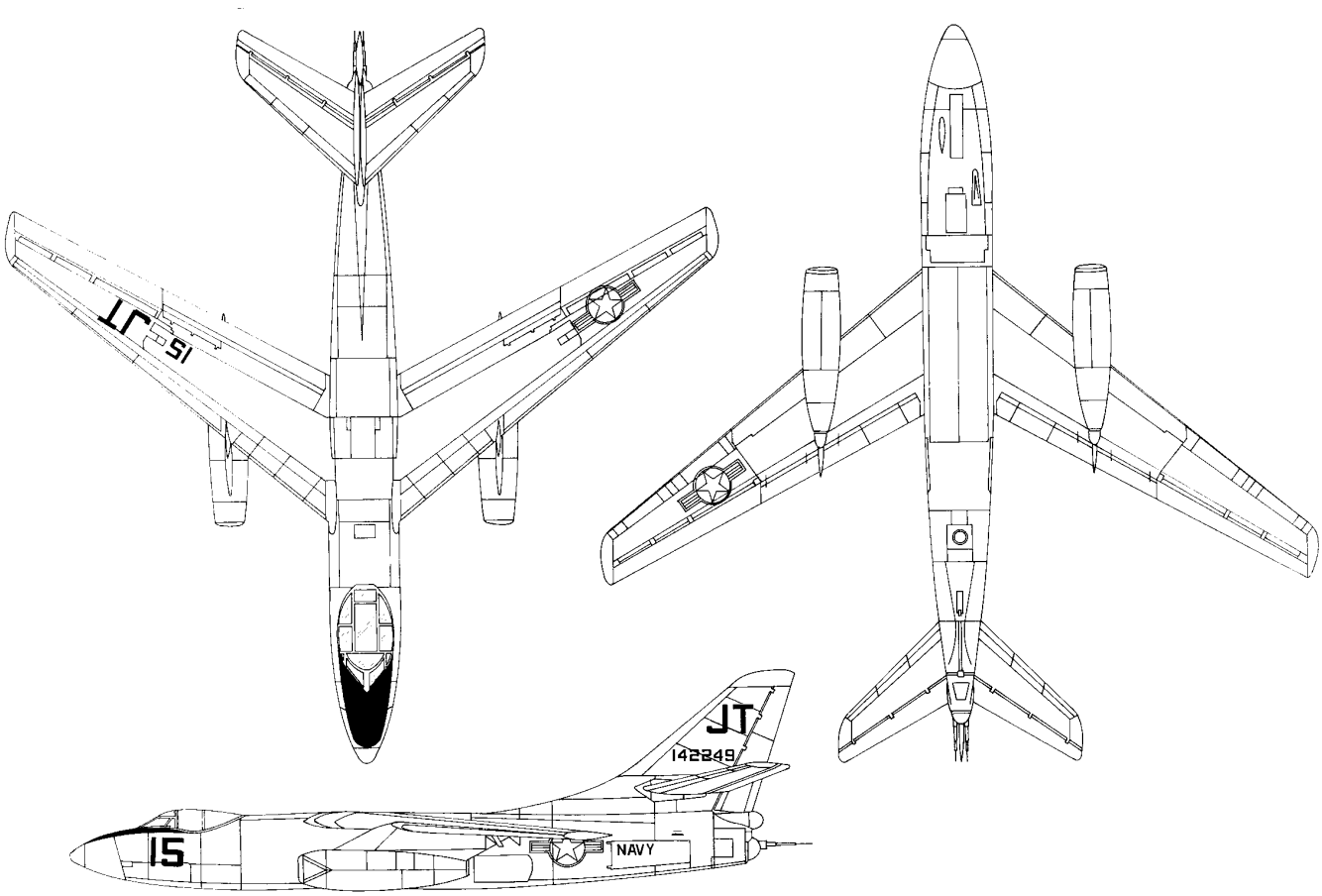

Line drawings for an A-3 Skywarrior.

A4D (A-4) Skyhawk

By the early 1950s, jet power had matured to the point where the Navy became interested in using it for an attack aircraft. At that time, the AD Skyraider was the Navy's premier VA plane. The A4D Skyhawk (redesignated A-4) was the successor of the AD-1 Skyraider. Interdiction and close air support was what the aircraft was designed to do by the Douglas Company's aeronautical engineer, Mr. Ed Heinemann.

First contract	10 Sep 1952
First flight	22 Jun 1954
First reported in squadron	27 Sep 1956
Last delivery	27 Feb 1979
Number accepted	2,876

An XA4D-1 Skyhawk takes off on its maiden flight from Edwards AFB, California, June 1954.

Model Designations Accepted from the Manufacturer (New Builds)

Only one model will list the technical specifications for the aircraft. All the other models will only identify the specific changes resulting in a new model designation.

A4D-1 (Redesignated A-4A):

The A4D-1 was a single seat aircraft designed as a light weight, carrier-based, turbo-jet plane whose primary mission was the destruction of enemy ground and surface targets. The structure was a conventional all metal semi-monocoque type. Fitted with automatically operated wing slats and hydraulically operated split flaps. Folding wings were not provided. The following are the technical specifications for the A4D-1:

Dimensions:

Wing area	260 sq ft
Wing span	27 ft 6 in
Length	39 ft 5 in
Height	15 ft 7 in

Weight:

Empty	8,286 lbs
Basic	8,375 lbs
Design	12,504 lbs
Combat	11,702 lbs
Max Takeoff (Field)	19,910 lbs
Max Takeoff (Catapult)	19,910 lbs
Max Landing (Field)	11,556 lbs
Max Landing (Arrest)	11,556 lbs

Ordnance:

Four 20 mm guns with 280 rounds on wing
Fire control: six Aero 14B racks on wing
Max load capacity 3,000 pounds

Electronics:

UHF Comm	AN/ARC-27A
IFF	AN/APX-6
IFF Coder	AN/APA-B9
UHF ADF	AN/ARA-25
TACAN (Backfit)	AN/ARN-21

Power Plant:

One Wright J65-W-4 axial flow engine.

A4D-2 (Redesignated A-4B):

The A4D-2 differed from the A4D-1 primarily by the incorporation of a pressure fueling-system, flight refueling provisions and a powered elevator system. One seat.

A4D-2N (Redesignated A-4C):

Improved A-4B with longer nose. One seat.

A4D-5 (Redesignated A-4E):

The A4D-5 was an A4D-2N with the J-52-P6 engine and two additional wing weapon stations. One crew.

A-4F:

Similar to A-4E but with J52-P-8A engine. ESCAPAC IC-3 ejection seat. One crew.

A-4G:

For Australian Navy.

A-4H:

For FMS.

A-4K:

For New Zealand.

A-4KU:

For FMS.

A-4M:

Similar to A-4F but with enlarged canopy. One crew.

A-4N:

For FMS.

Other Designations

TA-4B:

Small, single-seat, delta wing, carrier-based, attack aircraft with tricycle landing gear and in-flight refueling capability.

EA-4P:
TA-4F modified for ECM missions.

A-4L:
A-4C with new engine, winglift spoilers, Walleye and Shrike missile capability, and improved avionics.

OA-4M:
A-4M modified for use by Marine Corps in high speed reconnaissance and tactical air control.

A-4S:
A-4B aircraft for use by Singapore.

TA-4S:
Trainer version of the A-4S.

Bureau Numbers

XA4D-1	137812
A4D-1	137813-137831, 139919-139970, 142142 - 142235 142082-142141, 142116-142423, 142674-142953, 144868-145061
A4D-2N	145062-145146, 146460-146692, 147669-147819, 148304-148317, 148465-148614, 149487-149646, 150581-150600
A4D-3	145147-145156
A-4E	151984-152100
TA-4E	152102-152106
A-4F	152101, 154172-154286, 154970-155069
TA-4F	152846-152878, 153459-153531, 153660-153690, 154287-154343, 154614-151657
A-4G	154903-154910
TA-4G	154911-154912
A-4H	155242-155289, 157395-157428, 157918-157925
TA-4H	157429-157134, 157926-157929
TA-4J	155070-155119, 156891-156950, 158073-158147, 158453-158527, 158712-158723, 159099-159104, 159546-159556, 153795-159798
A-4K	157904-157913
TA-4K	157914-157917
A-4KU	160180-160209
TA-4KU	160210-160215
A-4M	158148-158136, 158412-158435, 159470-159493, 159778-159794, 160022-160045, 160241-160264
A-4N	158726-158746, 159035-153052, 159075-159098, 159349-159350, 159515-159545, 159799-159824
A4D-5	149647-149666, 149959-150438, 151022-151261

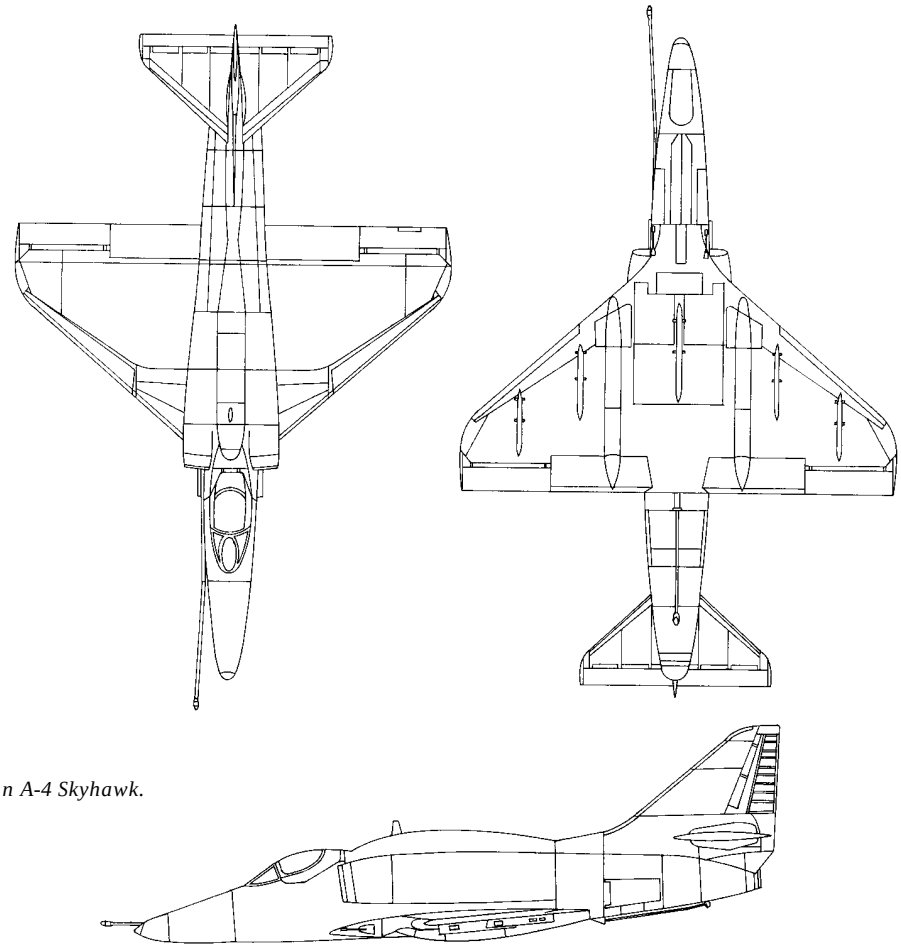

Line drawings for an A-4 Skyhawk.

A3J (A-5) Vigilante

The two aircraft that rank as the heaviest the Navy ever deployed aboard carrier are the A-3 Skywarrior and the A-5 Vigilante. Designed by North American to be a supersonic, allweather, strategic bomber, the Vigilante began life as the A3J and was redesignated A-5 in the general redesignation of Defense Department airplanes that occurred in 1962. The contractor referred to this design as the "North American General Purpose Attack Weapon" (NAGPAW). The first contract for this aircraft was awarded to North American by the Navy on 29 August 1956. Its first flight occurred two years later on 31 August 1958. Technical difficulties and strategic prioritites prevented the A3J from ever serving in its intended role, but it did find a valuable place as a reconnaissance aircraft. The Vigilante was first reported in squadron by VAH-3 in June 1961, and completed its final deployment in September 1979. A total of 156 Vigilantes were bought.

A YA3J-1 Vigilante takes off, circa late 1950s.

Model Designations Accepted from the Manufacturer (New Builds)

YA3J-1:
Prototype version of the A3J-1.

A3J-1 (redesignated A-5A):

Crew	two
Length	76 ft 6 in
Span:	
Open	53 ft
Folded	42 ft
Wing area	700 sq ft
Height:	
Tail upright	19 ft
Tail folded	14 ft 6 in
Weight:	
Empty	32,714 lbs
Combat	47,530 lbs
Combat Range	1,750 nm to 2,270 nm
Engines	two 17,000 lbs General Electric J79-8 or two 15,690 lbs General Electric J79-2
Ordnance	Internal stores including special weapons Two wing stations for external stores.

A3J-2 (redesignated A-5B):
Greater fuel capacity and two additional wing stations for ordnance.

A3J-3P (redesignated RA-5C):
Same as A-5B but equipped with day and night panoramic cameras that could scan horizon to horizon. Also equipped with cameras for still photography. Electronic systems included jamming and intelligence gathering capabilities.

Bureau Numbers

YA3J-1	145157-145158
A3J-1	147850-147863
A3J-1	148924-148923
A3J-1	149276-149299
A3J-2	149300-149305
A3J-3P	149306-149317
A3J-3P	150823-150842
RA-5C	151615-151634
RA-5C	151726-151728
RA-5C	151962-151969 (all canceled)
RA-5C	156608-156653

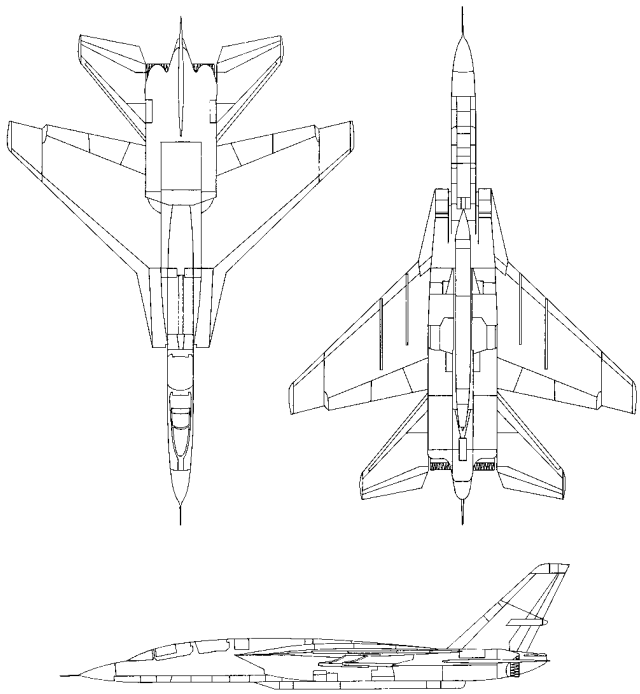

Line drawings for an A3J (A-5) Vigilante.

A-6 Intruder

The Navy's experience with jet aircraft in the Korean conflict led to a requirement for a low-level attack bomber that could deliver ordnance against moving and fixed sea and land targets in all-weather and darkness. It was to be subsonic and capable of delivering nuclear as well as conventional ordnance thus being useful in both nuclear retaliatory and conventional conflicts. The Chief of Naval Operations issued the operational requirement (CA-01504) for this aircraft on 2 October 1956. On 5 March 1957 the Navy announced its intention to conduct a design competition for an aircraft that would meet the operational requirement. Eight manufacturers submitted eleven designs to this competition. The Navy selected the Grumman design. The aircraft that Grummman produced was a swept-wing two-place plane with exceptional loitering ability that could fly under enemy radar and carry greater and more varied stores than any naval attack aircraft of its time. It was powered by two Pratt & Whitney J-52 P-6 turbojet engines each with 8,500 pounds of thrust. The Intruder made its first flight 19 April 1960 as the A2F-1, a designation that became A-6A in the Department of Defense's uniform designation system.

First contract	26 March 1959
First flight	19 April 1960
First reported in squadron	February 1963 (A-6A in VA-42)
Initial operating capability	February 1963
Number accepted	687

Model Designations Accepted from the Manufacturer (New Builds)

A-6A:

Originally designated A2F-1 and changed to A-6A in the DOD uniform designation system, this aircraft was first accepted by the Navy in February 1963 by VA-42. At light weights it could operate from short unprepared fields in close support of ground troops; at higher weights it could operate from catapult on long range special weapon strikes against heavily defended fixed targets. The A-6A had an attack-navigation and central digital computer system to find targets in all moving conditions.

EA-6A:

The original designation of the EA-6A was A2F-1Q. This aircraft retained a portion of the A-6A's attack capability but gave up much of its bombing and navigation equipment to make space for antennas to convert the attack plane into an effective electronic warfare aircraft.

A-6B:

The A-6B was a version of the A-6A design produced to meet the special wartime need of destroying ground-based antiaircraft defenses. The A-6B was equipped to carry the Standard Anti-Radiation Missile (ARM) and had emitter location sensors.

KA-6D:

A-6A modified for use as aerial refueling tanker.

A-6E:

The Navy began to develop this version of the

An early A2F-1 Intruder in flight, circa early 1960s.

Intruder in the late 1960s. The first production deliveries were made in 1971. The A-6E was intended to reduce the necessary maintenance on the aircraft by increasing the reliability of its equipment and support. There were also improvements in the search and track radar, the computer and armament control equipment. The A-6E program involved new production A-6E's and the modification of A-6A's to the -6E configuration. The latter resulted in converting 240 A-6As to A-6Es.

A-6E TRAM:

The Target Recognition Attack Multisensor (TRAM) configuration of the A-6E greatly improved the aircraft's capability. Introduced in 1976, the TRAM version was equipped with a laser ranger and designator, a laser spot tracker and high resolution infrared sensor. The crew was able to view television quality images of their targets by day or night. The TRAM sensors greatly improve both ballistic and visual bombing accuracy. The TRAM version is equipped to launch laser-guided bombs and missiles. The TRAM's ASN-92 CAINS inertial navigation system gave the crew greater reliability and accuracy than was possible with the ASN-31. The TRAM version also had an Automatic Carrier Landing System (ACLS) and the Approach Power Compensator to provide totally automatic landing aboard carrier.

Specifications for the A-6E are as follows:

Length	54 ft 9 in
Span	53 ft
Height	16 ft 3 in
Height with wings folded	21 ft 11 in
Weight	26,896 pounds empty 60,400 pounds gross
Crew	2
Speed	Over 500 knots
Engines	2 Pratt & Whitney 9,300 lb J52-P-8
Ordnance	Five external store positions. Maximum load of 17,280 pounds

Other Designations (Modifications of existing airframes)

A-6C:

The A-6C was another special version of the A-6A produced to meet a wartime necessity. It was equipped with infrared sensors and Low Light Level Television (LLLT). The A-6C was known by the acronym TRIM which described the aircraft's mission as Trails, Roads Interdiction Multi-sensor. The A-6C's sensors were meant to detect the enemy's supply depots and truck traffic in Southeast Asia.

JA-6A:

A-6A modified as a test-bed for Circulation Control Wing research and development.

Bureau Numbers

A2F-1	147861-147867, 148615-148626, 149475-149486, 149935-149958, 151558-151594
A2F-lQ	151595-151612
A-6A	151780-151827, 152583-152646, 152891-152964, 154124-154171, 155137-155190, 155581-155721, 156994-157029, 158041-158052, 160421-160431
A-6B	154046-154099
KA-6D	158053-158072
A-6E	158041-158052, 158528-158539, 158787-158798, 159174-159185, 159309-159317, 159567-159581, 159895-159906, 160421-160431, 160993-160998, 161082-161093, 161100-161114, 161230-161241, 161659-161694, 161886-161897, 163520-163530

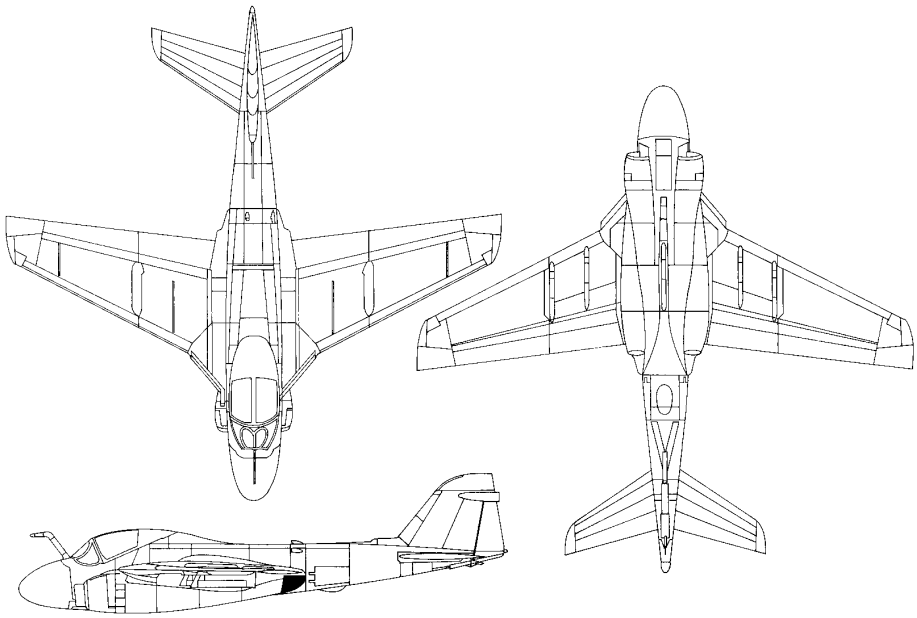

Line drawings for an A-6 Intruder.

A-7 Corsair II

In May 1963, the Navy began a design competition for a light-attack, carrier-based aircraft to replace the Douglas A-4E Skyhawk. The new aircraft was to carry a larger ordnance payload than the Skyhawk and fly a greater combat radius. Vought, Douglas, Grumman, and North American responded to the Navy's invitation to bid. Vought was selected as the winner in February 1964. In March, the designation A-7A was approved for the new aircraft. The proposal by Vought engineers was based on their F-8 Crusader but without that fighter's adjustable wing incidence. It was to incorporate the Pratt & Whitney TF30-P-6 turbo-fan engine which had been developed for the F-111. The engine for the A-7, however, was not to have an afterburner. By using a proven design and engine, development of the A-7 was greatly accelerated over what it would have been if both airframe and powerplant were entirely new concepts.

The following are significant dates for the A-7:

The first flight occurred on 27 September 1965, and an A-7A Corsair II was delivered to VA-174 on 13 October 1966.

Carrier trials began aboard *America* (CVA 66) in November 1966.

Carrier trials ended with the final acceptance trials at sea aboard *Constellation* (CVA 64) in March 1967.

First tactical unit, VA-147 was established February 1967 and the second, VA-87, was established in June 1967.

First operational squadron deployed aboard *Ranger* (CVA 61) in November 1967.

CDR James C. Hill, writing in *Proceedings,* states that his squadron, VA-147, was established February 1967 and the A-7 "deployed into the combat environment of Southeast Asia on 4 November."

First A-7 combat action was December 1967, flown by VA-147 from *Ranger* (CVA 61).

Model Designations Accepted from Manufacturer (New Builds)

A-7A:

A single-place, carrier-based, light attack, subsonic, medium range aircraft, the A-7A was powered by the Pratt & Whitney TF30-P-6 engine and designed to provide high attack utility and flexibility for close support and interdiction missions by virtue of a large number of external store stations to provide ordnance loading capacity and freedom of ordnance choice. A large internal fuel capacity made external fuel unnecessary for most missions while retaining maximum number of stations for armament. The A-7A's combat range was not less than 1,180 nautical miles with an average cruising speed never under 390 knots. The aircraft had an excellent overload capability in terms of wind-over-deck requirements, flying qualities and structural integrity. Features to expedite maintenance and airplane turnaround were important A-7A design characteristics. The A-7A was designed with a fixed wing incidence and a high-lift system composed of leading edge flaps and single slotted trailing edge flaps. Lateral control was provided by outboard ailerons and inboard spoilers.

A-7B:

Similar to A-7A except with improved engine, a Pratt & Whitney TF30-P-8 or -408, instead of the TF30-P-6 used in the A-7A. Also, variable position flaps, not found in the A-7A, were incorporated in the A-7B.

A-7C:

Initially intended to be a two-seat training version of the A-7B. When this plan was not pursued, the A-7C designation served as a "stop-gap" assigned to those aircraft accepted with the improvements intended for aircraft accepted as A-7E but lacking the Rolls Royce TF41-A-2 engine intended for the A-7E. All A-7Cs were powered by either the Pratt & Whitney TF30-P-8 or -408.

An early A-7A Corsair II in flight, circa mid-1960s.

A-7D:
For U.S. Air Force.

A-7E:
Made its combat debut when VA-146 and VA-147 deployed in April 1970 in *America* (CVA 66). The A-7E was similar to A-7B but with improved naval weapons delivery system, the AVQ-7B Head-Up Display, the ASN-91 Tactical Computer, the APQ-126 Forward Looking Radar, the ASN-90 Inertial Measurement Set and one 20 mm M61Al gun instead of two 20 mm MK-12 guns. All A-7Es were powered by the Rolls Royce TF41-A-2 engine built, with modifications under license by Allison division of General Motors. The TF41, a non-afterburner engine, had a thrust of 15,000 pounds which was a considerable increase over the TF30-P-8 and -408. Specifications for the A-7E are as follows:

Wing:	
Area	375 sq ft
Maximum span	38.73 ft
Folded span	23.77 ft
Aspect ratio	4
Sweep 1/4 chord	35°
MGC	130.08 in
Length	46.13 ft
Height	16.06 ft
Maximum tread	9.49 ft
Weight (with TF41-A-2 engine):	
Empty	18,546 lbs
Basic	19,576 lbs
Design	29,575 lbs
Combat (Clean A/P)	25,834 lbs
Maximum takeoff (Overload)	42,000 lbs
Maximum takeoff (Normal)	37,279 lbs
Maximum landing (Carrier)	25,300 lbs

Ordnance:
One 20 mm aircraft gun, M61.
Two fuselage pylons for missiles.
Six wing-mounted pylons with total capacity of 19,000 pounds.

A-7H:
For Greece.

TA-7H:
Two-seat trainer version of A-7H for Greece.

A-7K:
Two-seat A-7D for U.S. Air Force.

Other Designations

TA-7C:
Two-seat trainer version, converted from A-7B and A-7C.

A-7G:
Designation of aircraft for Switzerland. Never delivered.

EA-7L:
Converted from TA-7C; modified to FEWSG configurations.

A-7P:
For Portugal, converted from A-7A.

TA-7P:
Two-seat trainer version for Portugal, converted from A-7A.

Bureau Numbers

YA-7A	152580-152582
A-7A	152647-152685
A-7A	153134-153273
A-7A	154344-154360
A-7A	154913-154929 (Deliveries canceled)
A-7B	154361-154573 (Deliveries of 154557-154573 canceled)
A-7B	156178-156417 (Deliveries canceled)
A-7C	156734-156800
A-7E	156801-156890
A-7E	157435-157648 (Deliveries of 157595-157648 canceled)
A-7E	158002-158028
A-7E	158652-158681
A-7E	158819-158842
A-7E	159261-159308
A-7E	159638-159661
A-7E	159668-159679
A-7E	159967-160006
A-7E	160537-160566
A-7E	160613-160618
A-7E	160710-160739
A-7E	160857-160886 (Deliveries of 160881-160886 canceled)
A-7H	159622-159667
A-7H	159913-159966
TA-7H	161218-161222

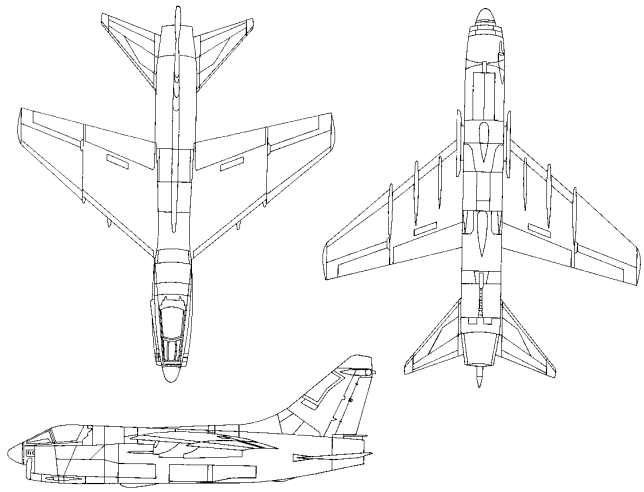

Line drawings for an A-7 Corsair II.

AD (A-1) Skyraider

During World War II the Navy began looking for a new dive-bomber torpedo aircraft to meet its changing tactical and operational requirements. Several planes, among them the AD's direct predecessor, the SB2D/BTD, were developed by the Bureau of Aeronautics. Design difficulties and over-weight problems, however, ultimately led to a decision not to produce the SB2D/BTD. This in turn led to a new design which incorporated the good features of the SB2D/BTD while overcoming its inherent difficulties.

The AD series (later redesignated A-1) that emerged from the combined efforts of the Bureau of Aeronautics and Douglas, who was the contractor, had two particularly significant design aspects. First, great emphasis was placed on the importance of the stringent weight control policy. Secondly, the standard bulky, heavy bomb displacing gear was replaced by a light, explosive device which literally blew the bomb clear. In comparison with the most advanced operational dive-bombers in 1945, the AD's initial design compared most favorably with a 27 percent greater top speed and a capability of carrying up to 4,000 pounds of either bombs or torpedoes.

First contract	6 Jul 1944
First flight	18 Mar 1945
First reported in squadron	6 Dec 1946
Last delivery	Mar 1957
Last reported in squadron	31 Dec 1971
Number accepted	3,180

Model Designations Accepted from the Manufacturer (New Builds)

Only one model will list the technical specifications for the aircraft. All the other models will only identify the specific changes resulting in a new model designation.

AD-1:

The initial single seat version of the Skyraider was powered by a 2,500 hp Wright R-3350-24W engine. Its details were as follows:

Weight empty	10,508 lbs
Gross (Scout)	13,924 lbs
Gross (Bomber)	18,030 lbs
Dimensions:	
Wing span	50 ft
Length	38 ft 4 in
Height	17 ft 6 in
Ordnance on Fuselage:	
Bombs	one 2,000 lbs
Depth bomb	one 650 lbs
Mine	one 2,000 lbs
Torpedo	one MK 13-3
Ordnance on Wings:	
Bombs	two 2,000 lbs
Depth Bombs	two 650 lbs
Mines	two 1,000 lbs
Rockets	two 11.75 in. Tiny Tim twelve HVAR
Torpedo	two MK 13-3
Guns	two 20 mm (M3)

AD-1Q:

AD-1 with countermeasures unit.

An XBT2D-1 in flight. This was the first designation assigned to the AD Skyraider.

AD-2:
Powered with the improved 2,700 hp Wright R-3350-26W engine.

AD-2Q:
AD-2 with countermeasures equipment.

AD-3:
Stronger fuselage, improved landing gear, new canopy design.

AD-3N:
Equipped for night attack.

AD-3Q:
Countermeasures equipment improved and relocated to provide better operation and crew comfort.

AD-3W:
Airborne early warning equipment.

AD-4:
The AD-4 was equipped with a strengthened landing gear, improved radar, G-2 compass, anti-G suit provisions, 4-20 mm cannon, and Aero 14 rocket launchers capable of carrying up to 50 pounds of bombs.

AD-4W:
Airborne early warning equipment.

AD-1N:
The primary mission of the AD-4N airplane was night attack and radar countermeasures.

AD-4Q:
Countermeasures equipment.

AD-5 (Redesignated A-1E):
A redesign of the aircraft. The AD-5 incorporated side by side seating for an assistant pilot. The revised crew arrangement facilitated all-weather operation and permitted utilization for long range navigation, radar search, spotting and observation, air support coordination, instrument training, pilot familiarization and other operations requiring a second crew member. Controls, armament and tactical equipment were located for single pilot operation. A single dive brake was provided for dive bombing and maneuvering control. The AD-5 could be converted rapidly aboard a carrier for operation as a passenger, cargo, ambulance or long range airplane by installation of appropriate conversion kits supplied as alternate equipment.

AD-5N (Redesignated A-1G):
Night attack version with radar countermeasures.

AD-5W (Redesignated EA-1E):
Airborne early warning version.

AD-6 (Redesignated A-1H):
The single-place airplane is conventional in design and structure, landing gear, canopy, flaps, wing folding and three fuselage dive brakes are operated hydraulically. Capable of low level bombing, the centerline bomb station of the AD-6 was capable of carrying external stores up to 3500 pounds weight and 30 inches diameter. A combination 14 and 30 inch suspension bomb ejector was installed. A bomb director suitable for either high or low altitude bombing was also installed.

AD-7 (Redesignated A-1J):
The improvements in the AD-7 over its predecessors include the use of the R-3350-26WB engine and structural improvements in the wing to improve fatigue life.

Other Designations

AD-1U:
AD-1 with radar countermeasures and tow target equipment. Deletion of armament and water injection equipment.

XAD-1W:
AD-1 with airborne early warning equipment. AD-3W prototype.

XAD-2:
Similar to XBT2D-1 except engine, increased fuel capacity.

AD-2N:
Equipped for night operations.

AD-2U:
AD-2 with radar countermeasure and tow target equipment. Deletion of armament and water injection equipment.

XAD-3E:
AD-3W modified for submarine search. Aeroproducts propeller.

AD-2W:
AD-2 with airborne early warning equipment.

AD-4L:
AD-4 equipped for winterized version.

Bureau Numbers

The Navy ordered the AD under the designation BT2D indicating that it was the second bomber torpedo aircraft which Douglas had designed for the Navy. The designation was later changed to A to reflect the Navy's decision to adopt the letter A in its designation system to the replace the older system of T, B, SB indicating assault aircraft and the intention to combine these missions in one aircraft.

XBT2D-1	09085-09095, 09097, 09100-09106
XBT2D-1W	09107
XBT2D-1P	09096
XBT2D-1Q	09109
XBT2D-1N	09098-09099
XAD-2	09108
AD-1	09110-09351, 21742-22006

AD-1Q	09352-09392 (09387-09392 canceled)
AD-2	122210-122365
AD-2Q	122366-122372, 122374-122387
AD-2QU	122373
AD-3	122729-122852
AD-3E	122906-122907
AD-3N	122908-122909, 122912-122922
AD-3Q	122854-122876
AD-3S	122910-122911
AD-3W	122877-122905
AD-4	122853, 123771-124005 (124007-124036 canceled), 127844-127853, 127861-127865, 127873-127879, 128917-128936, 128944-128970, 128979-129016
AD-4B	127854-127860, 127866-127872, 128937-128943, 128971-128978, 132227-132391, (134005-134018 canceled)
AD-4N	124128-124156, 124725-124760, 125707-125741, 126876-126902, 126926-126946, 126970-126987, 127011-127018, 127880-127920
AD-4NA	125742-125764, 126903-126925, 126947-126969, 126988-127010
AD-4NL	124725-124760
AD-4Q	124037-124075
AD-4W	124076-124127, 124761-124777, 125765-125782, 126836-126875, 127921-127961
XAD-5	124006
AD-5	132392-132476, 132478, 132637-132728, (132687-132728 canceled) 133854-134004 (133930-134004 canceled), (134076-134233 canceled)
AD-5N	132477, 132480-132636, 134974-135053, (135055-135138 canceled)
AD-5Q	135054
AD-5S	132479
AD-5W	132729-132792 (132731-132792 canceled), 133757-133776, 135139-135222, (138535-138568 canceled), 139556-139605
AD-6	134466-134637, 135223-135406, 137492-137632, 139606-139821, 142010-142081
XAD-7	(142010 canceled)
AD-7	142011-142081, (142546-142629 canceled) (143050-143133 canceled)

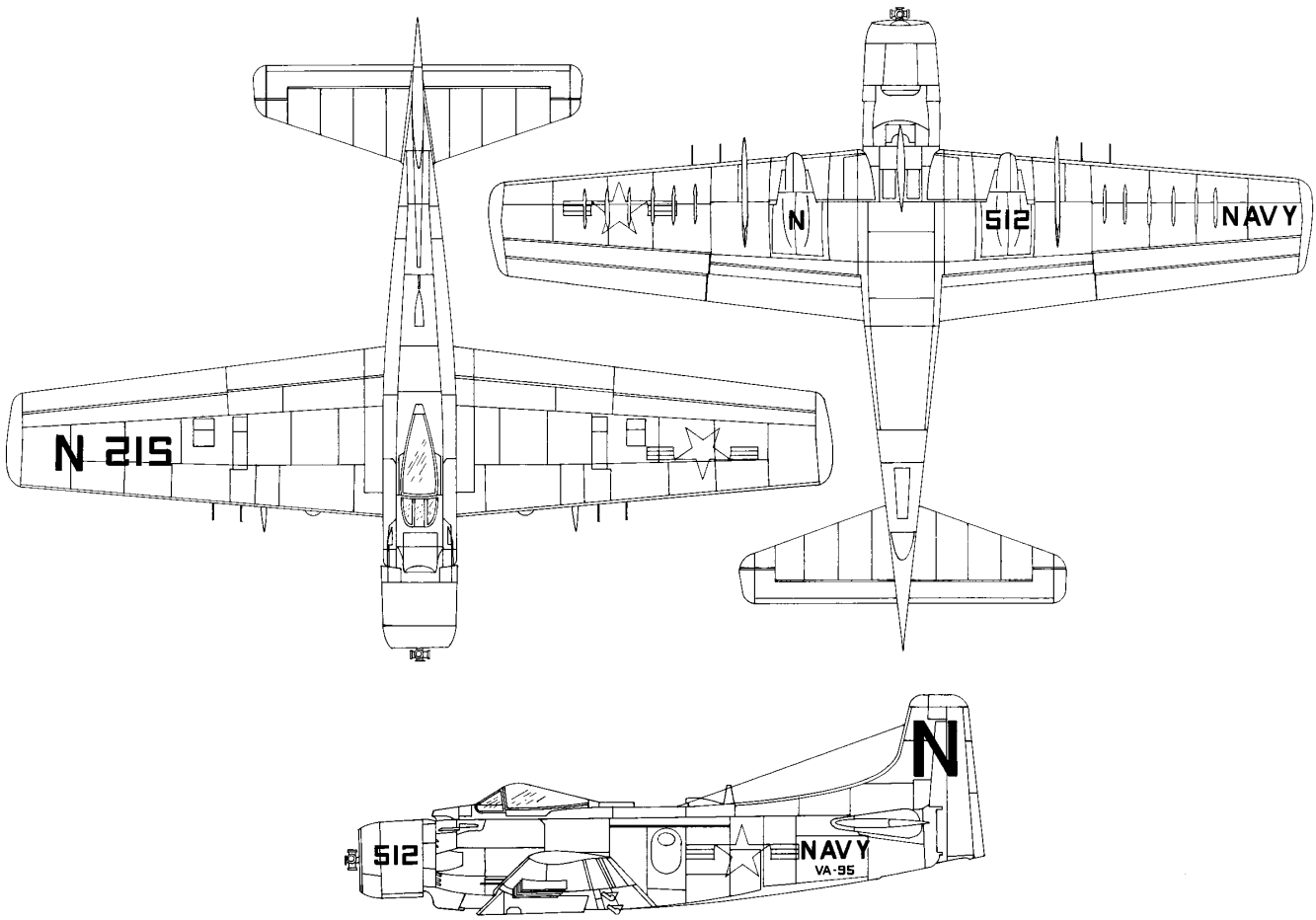

Line drawings for an AD (A-1) Skyraider.

AF Guardian

The genesis of the Guardian begins in the late months of World War II as Grumman developed plans to replace the TBF Avenger. The normal continuation of the designation, TB2F, was used on a design for a two-engine aircraft that never was built but the designation was recognized by the Navy. The design which the Navy ordered in February 1945 was a single engine attack aircraft designated XTB3F. Because of the designation change of all Navy attack aircraft to "A" the TB3F entered squadron service in October 1950 as the AF. The aircraft was intended to work in hunter-killer pairs composed of an AF-2S and AF-2W.

First contract	19 February 1945
First flight	December 1946
First reported in squadron	18 October 1950
Last delivery	April 1953
Last reported in squadron	31 August 1955
Initial operational capability	October 1950
Number accepted	389

An AF-2S Guardian in flight, June 1950.

Model Designations Accepted from the Manufacturer (New Builds)

XTB3F-1

XTB3F-2S

AF-2W

AF-2S

AF-3S

AF-2S (Mission and Description):

The AF-2S was the production development of the XTB3F-2S. Its primary mission was to attack enemy submarines after being directed to the target's position by the AF-2W. The AF-2S laid down a pattern of sonobouys to determine exact location of the enemy submarine after which it launched its sonic-directed torpedo to complete the attack. Rockets and depth bombs could be carried to augment the attack. The AF-2S was a three-place plane for operation ashore or aboard carriers. It was conventional in design and structure with an all-metal two spar wing and a semi-monocoque fuselage. Landing gear, slotted flaps, wing folding mechanism and pilot's canopy were hydraulically operated. Ailerons were of sealed balance type with spring tabs and one trim tab. Rudder had a combination trim and four to one ratio balance tab. Elevators were interconnected, one equipped with a spring tab and the other with a trim tab. Power plant installation was conventional with steel tube mount.

Specifications for the AF-2S are as follows:

Power plant	One Pratt & Whitney R-2800-48
Weight:	
Empty	14,658 lbs
Basic	15,336 lbs
Design	19,200lbs
Combat	18,123 lbs
Maximum Takeoff	23,015 lbs
Maximum Landing	22,500 lbs
Dimensions:	
Wing	
Area	549 sq ft
Span	60 ft
Length	43 ft 5 in
Height	16 ft 7 in
Tread	14 ft 5 in

Ordnance:

Bomb bay

1 Mk 41 Torpedo
1 Mk 34 Torpedo
1 Mk 24 Torpedo
1 Mk 24 Mine could be substituted for either the Mk 41 or the Mk 34 Torpedo.

4 Wing Points (inboard and mid-wing)

Six 5-inch HPAG or HVAR Rockets.
Four 3.5 inch aircraft rockets.
Four Mk 54 depth bombs.
Three AN/SSQ-1 Sonobuoys.
Two dispensers of AN/SSQ-2 Sonobuoys and Mk 5 drift signals (nine each).

Two releasable fuel tanks, 75 or 150 gallons each.

Fire control:

1 Mk 23-6 Bombsight mounted on a Mk 41-3 periscope.
1 Mk 8-8 Gun sight.

Maximum bomb capacity: 3,700 lbs

Cameras:

1 AN-N6A, Gun
1 K-25A, Reconnaissance

AN/AVQ-2 Searchlight on starboard outboard wingpoint.
AN/APS-31 Radar on port outboard wingpoint.
Combat range 795–990 nautical miles

AF-2W (Mission and Description):

The AF-2W was the production development of the XTB3F-1S. Its mission was radar search for submarines.

After detecting an underwater craft the AF-2W would direct its companion aircraft, the AF-2S onto the target to launch an attack. The AF-2W was a four-place aircraft for operation ashore and aboard carriers. The airplane was conventional in design and structure with an all metal two-spar wing and a semi-monocoque fuselage. The landing gear, slotted flaps, wing folding mechanism, and pilot's canopy were hydraulically operated. Ailerons were of the sealed balance type with spring tabs and one trim tab. Rudder had a combination trim and 4 to 1 ratio balance tab. Elevators were interconnected, one equipped with a spring tab and the other with a trim tab. Power plant installation was conventional with steel tube mount.

Specifications for the AF-2W are as follows:

Power plant	One Pratt and Whitney R-2800-48
Weight:	
Empty	15,858 lbs
Basic	16,037 lbs
Design	19,200 lbs
Combat	18,629 lbs
Maximum takeoff	21,802 lbs
Maximum landing	21,500 lbs
Dimensions:	
Wing	
Area	549 sq ft
Span	60 ft
Length	43 ft 5 in
Height	16 ft 7 in
Tread	14 ft 5 in
Ordnance:	
None	
Electronics:	
VHF Communication	AN/ARC-28
UHF Communication	(Dual) AN/ARC-27
MHF Liaison	AN/ARC-2
Interphone	AN/AIC-4 or AN/AIC-4A
Homing	AN/ARR-2A and AN/ARN-21
Radar Altimeter	AN/APN-1 or AN/APN-22
Range Receiver	R-23A/ARC-5
Radar Countermeasures	AN/APR-9B and AN/APA-70C
Radar	AN/APS-20C
Speed Control Kit	AN/APS-20
Radar Receiving Set	AN/APR-12
Radar Relay Transmitter	AN/ART-26 or AN/ART-28
Ground Position Indicator	AN/APA-57A or AN/APA-57C or AN/APA-81
IFF	AN/APX-2 or AN/APX-2A or AN/APX-6 or AN/APX-7
Combat Range:	750-1,315 nautical miles

AF-3S (Mission and Description):

Same as the AF-2S but with MAD gear installed.

Bureau Numbers

XTB3F-1	90504
XTB3F-2S	90505
XTB3F-1S	90506 (XTB3F-1S canceled)
AF-2S	123088-123116 (Even numbers to AF-2S)
AF-2W	123089-123117 (Odd numbers to AF-2W)
AF-2W	124187-124209 (Odd numbers to AF-2W)
AF-2S	124188-124210 (Even numbers to AF-2S)
AF-2S	124778-124848 (Even numbers to AF-2S)
AF-2W	124779-124849 (Odd numbers to AF-2W)
AF-2S	126720-126737
AF-2W	126738-126755
AF-2S	126756-126821
AF-2W	126822-126835
AF-2S	129196-129242
AF-3S	129243-129257
AF-2W	129258-129299
AF-3S	130364-130388
AF-2W	130389-130404

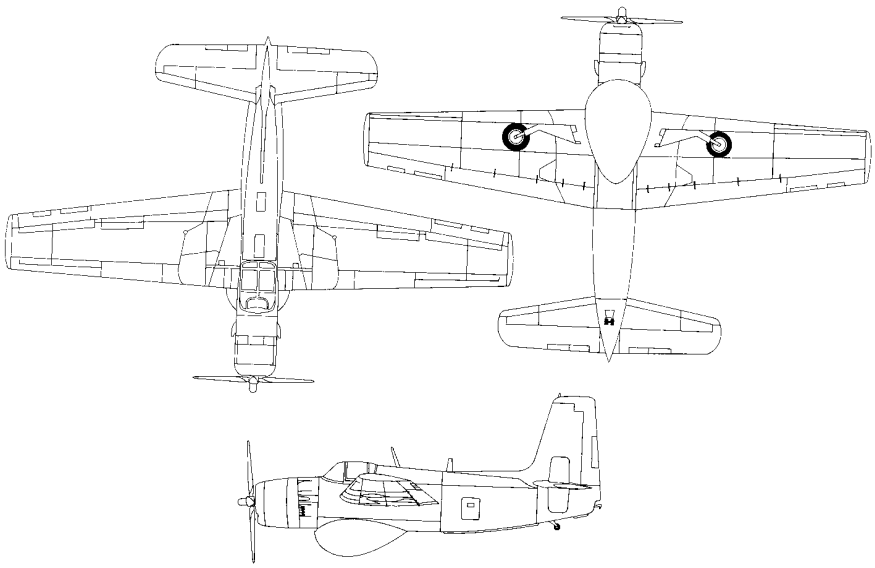

Line drawings for an AF Guardian.

AJ (A-2) Savage

On 24 June 1946, the Navy awarded North American a contract to build the aircraft that would become the AJ Savage. Intended as a carrier based bomber, the AJ was first reported in squadron service by VC-5 on 13 September 1949. It was eventually redesignated A-2.

First contract	26 June 1946
First flight	3 July 1948
First reported in squadron	13 Sept 1949
Last delivery	June 1954
Last reported in squadron	An AJ-2P by VAP-62 and VCP-61 in January 1960
Number Accepted	143

An AJ-2 Savage.

Models Accepted from the Manufacturer (New Builds)

XAJ-1:
Experimental version.

AJ-1 (Redesignated A-2A):
Crew of three in pressurized cockpit. Wing contained slotted flaps. Power boost system for ailerons, elevators, and rudder.

Weights:	
Empty	27,558 lbs
Basic	27,938 lbs
Design	47,000 lbs
Combat	35,742 lbs
Maximum take off	50,954 lbs
Maximum Landing	41,300 lbs
Power plant:	
Two Pratt & Whitney R-2800 44W propellers on wings. One Allison J-33-A-1 turbojet in tail.	
Dimensions:	
Wing area	836 sq ft
Wing span	71 ft 5 in
Length	63 ft 1 in
Height	20 ft 5 in
Ordnance:	
Guns	None
Maximum Bomb Capacity	12,000 lbs

AJ-2:
The AJ-1 with two Pratt & Whitney R-2800-48 and one Allison J33-A-10 engine. Fuel capacity was increased over that of AJ-1.

AJ-2P:
AJ-2 aircraft with nose redesigned to accommodate cameras.

Bureau Numbers

XAJ-1	121460-121462
AJ-1	122590-122601
AJ-1	124157-124186
AJ-1	124850-124864
AJ-2P	128043-128051
AJ-2P	129185-129195
AJ-2	130405-130421
AJ-2P	130422-130425
AJ-2	134035-134072
AJ-2P	134073-134075

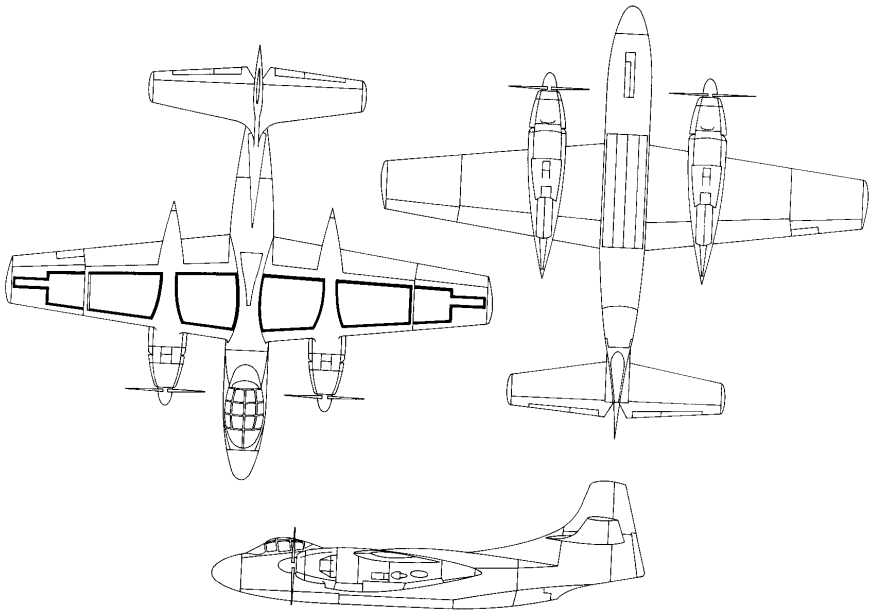

Line drawings for an AJ Savage.

AM Mauler

Improvements in engines and aircraft design led the Navy to abandon its old system of using different aircraft such as SB for Scout Bomber and TB for Torpedo Bomber and to combine these missions in one aircraft. The Douglas Company's BT2D was an example of an aircraft that was to combine the bombing and torpedo launching functions in one airframe. The Martin Company's BTM was designed in the same spirit. Eventually the old system of designation reflected the changes when the letter A for Attack replaced S (Scout), B (Bomber) and T (Torpedo). The BT2D served virtually all its life as the AD and later A-1. The BTM is remembered as the AM Mauler.

First contract	14 January 1944
First flight	26 August 1944
First reported in squadron	1 March 1948
Last delivery	October 1949
Last reported in squadron	An AM-1Q on 1 October 1950 by VC-4
Number Accepted	152

An AM-1 Mauler in flight carrying a full load of ordnance, March 1949.

Models Accepted from the Manufacturer (New Builds)

XBTM-1:

Experimental model of the AM-1.

AM-1

Torpedo and dive bomber, also for use in scouting missions. All bombs, mines, torpedoes, rockets, etc. were carried externally on three pylons on wings and fuselage. Provision for radar on right wing pylon. One crew. Structure was conventional, all-metal. Split dive brakes interlocked with landing flaps. Capable of carrying incendiary and fragmentation clusters and smoke tanks.

Weight:

Empty	15,100 lbs
Basic	15,830 lbs
Design	19,450 lbs
Combat	20,083 lbs
Maximum take off	25,000 lbs
Maximum landing	17,950 lbs on carrier. 20,600 lbs on land.

Power plant One Pratt & Whitney R-4360-4W.

Dimensions:

Wing area	496 sq ft
Wing span	50 ft 1 3/8 in
Length	41 ft 8 13/16 in
Height	16 ft 10 5/8 in
Ordnance:	
Guns	four 20 mm (M3) with 800 rounds
Maximum Bomb Capacity	6,000 lbs

AM-1Q:
Equipped for radar countermeasures.

Bureau Numbers

XBTM-1	85161-85162
AM-1	22257-22295
AM-1Q	22296
AM-1	22297-22345
AM-1Q	22346-22355
AM-1	22356-22856
AM-1Q	122388-122393
AM-1	122394-122437

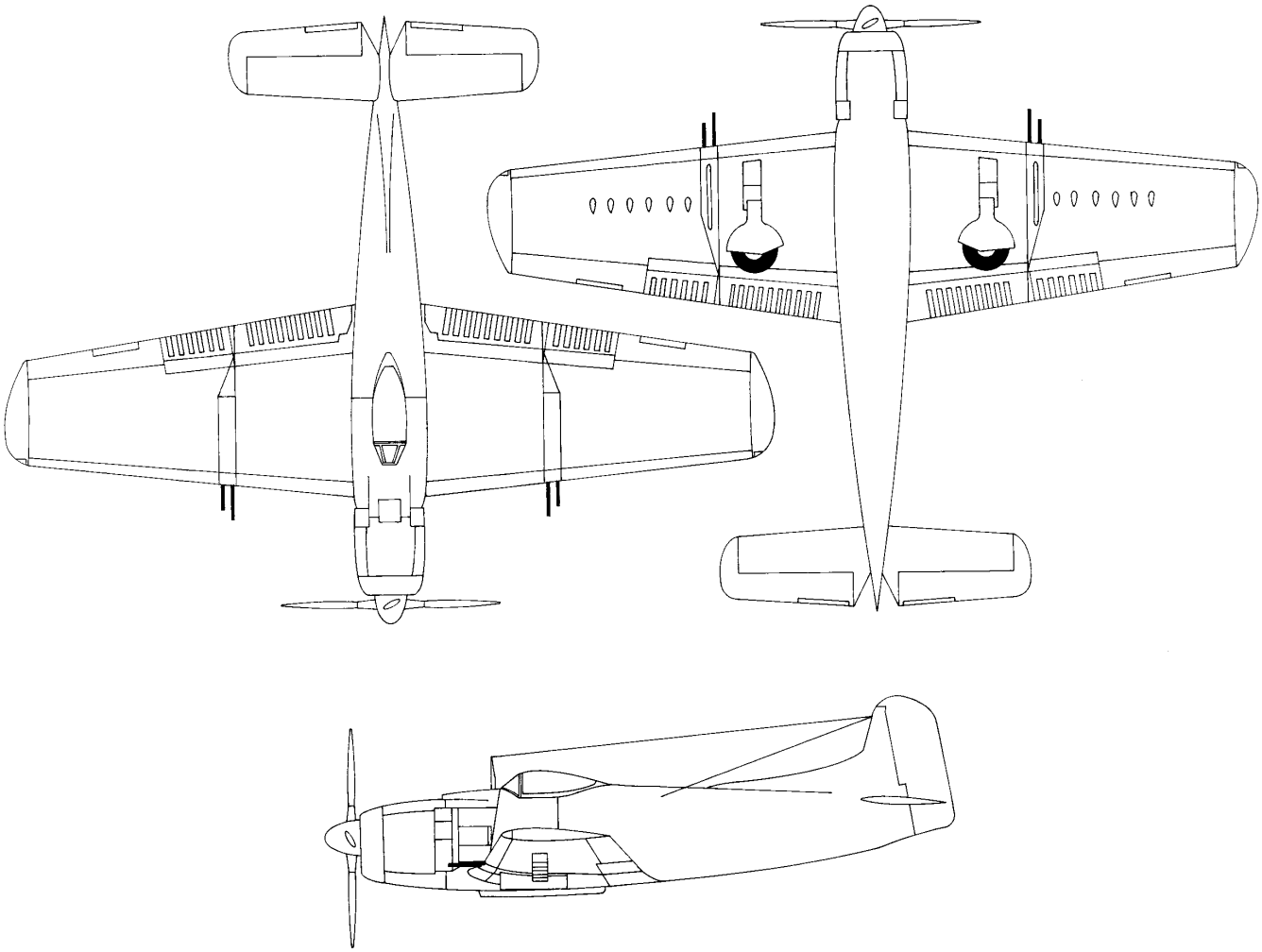

Line drawings for an AM Mauler.

BG

An attack biplane capable of delivering a 1,000 pound bomb, the BG was the only aircraft that the Great Lakes Corporation designed and produced for the U.S. Navy. Other Great Lakes aircraft which the Navy used include the TG-1 and TG-2, both of which were variations of Martin's T4M. Great Lakes won the contract for the BG on 13 June 1932. The aircraft made its first flight the following summer. Eventually, the Navy accepted 61 of these planes. They remained in squadron use until June 1941.

An XBG-1, June 1933.

Models Accepted

XBG-1:

Experimental version of the BG-1.

BG-1:

Crew	two
Length	28 ft 9 in
Height	11 ft
Span:	
upper	36 ft
lower	33 ft 8 in
Wing area	383.8 sq ft
Weights:	
gross	6,349 lbs
Range	550 statute miles
Engine	one Pratt & Whitney 750 hp R-1535-82
Ordnance:	
bomb	up to 1,000 lbs
guns	one .30 fixed forward firing
	one .30 flexible in rear cockpit

Bureau Numbers

XBG-1	9220
XBG-1	9494-9520
BG-1	9534-9550
BG-1	9840-9855

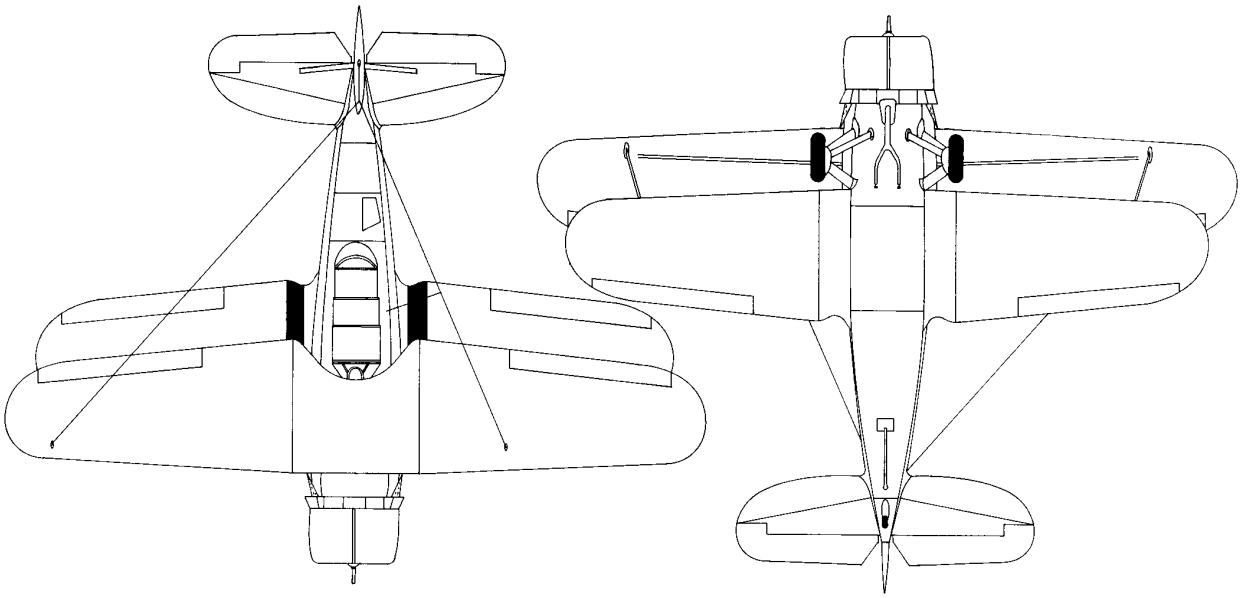

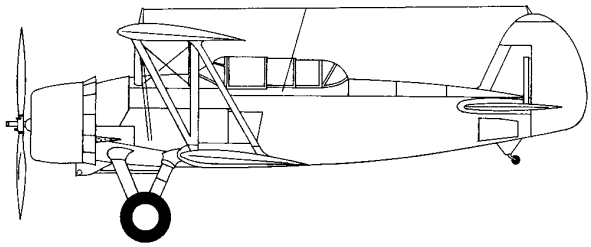

Line drawings for a BG-1.

BM

On 13 June 1928 the Navy awarded the Martin Company a contract to build a biplane dive bomber that could handle a torpedo as well as a thousand pound bomb. It would be the first Navy dive bomber that could carry a payload this large. Martin built the prototype to Bureau of Aeronautics Design 77 under the designation XT5M-1. To provide costing data the Naval Aircraft Factory also built a prototype and designated it the XT2N-1. Martin's XT5M-1 first flew in the spring of 1929. The production version was designated BM-1 and was first accepted by a squadron (VT-1S) in October 1932. Besides the XT5M-1, the Navy accepted 33 BMs from Martin and the XT2N-1 from the Naval Aircraft Factory.

A BM-1.

Models Accepted from the Manufacturer (New Builds)

XT5M-1:
Prototype of the BM-1.

XBM-1:
Built by Martin for use by the National Advisory Committee for Aeronautics (NACA). This aircraft was not an experimental version of the BM in the usual sense; its X indicated that it would be used experimentally by NACA.

BM-1:

Crew	Two
Length	28 ft 4 in
Height	12 ft 3 in
Span:	
upper	41 ft
lower	40 ft
Wing area	435.8 sq. ft
Weights:	
gross	6,183 lbs
useful	2,559 lbs
Range	415 nautical miles
Engine	One 600 hp Pratt & Whitney R-1690-44
Ordnance:	
bomb	one 1,000 pounder
guns	one .30 fixed synchronized mounted within the fuselage to the right of the centerline. one .30 flexible gun in rear cockpit.

BM-2:
Modified version of BM-1. Very small differences.

XT2N-1:
Prototype manufactured by the Naval Aircraft Factory.

Bureau Numbers

XT2N-1	A8052
XT5M-1	A8051
XBM-1	9212
BM-1	A8879-A8890
BM-1	9214-9217
BM-2	A9170-A9185

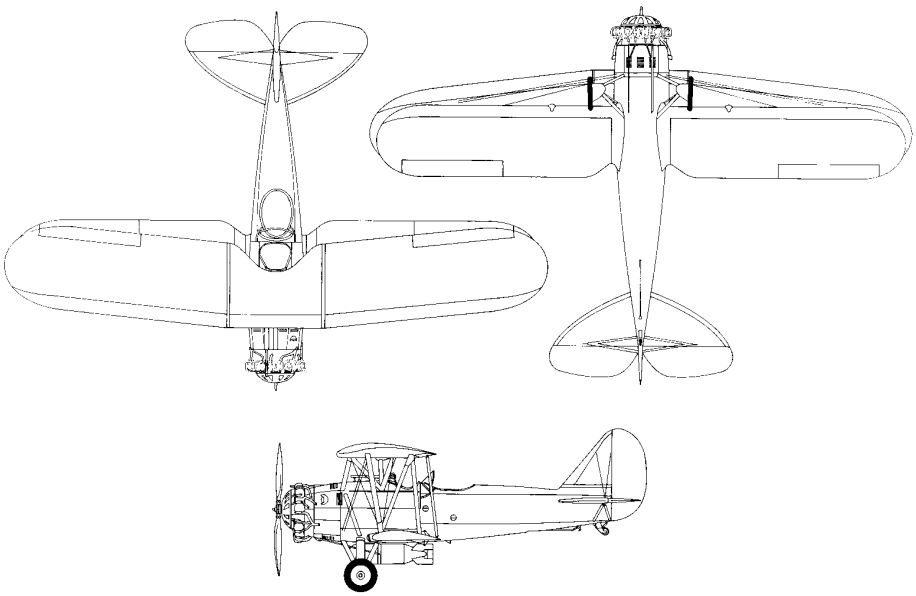

Line drawings for a BM.

BT

Designed by John Northrop, this aircraft conformed to his practice of using all-metal structures with progressive aerodynamic features. The Navy awarded Northrop a contract to produce this attack plane in November 1934 and designated it BT, the T being Northrop's manufacturer's letter. After his company became a division of the Douglas Corporation in 1937, Douglas used the XBT-2 as a prototype for the aircraft that became the SBD Dauntless.

An XBT-1 coming in for a landing, circa mid-1930s.

Models Accepted from the Manufacturer (New Builds)

XBT-1:

Experimental version of the BT-1.

BT-1:

Crew	two
Length	31 ft 8 in
Height	13 ft
Span	41 ft 6 in
Wing area	315 sq ft
Weights:	
gross	6,978 lbs
useful	2,511 lbs
Range	546 statute miles
Engine	one 825 hp Pratt & Whitney R-1535-94
Ordnance:	
bomb	one 1,000 pound
guns	one .50 fixed, forward firing
	one .30 flexible, dorsal

XBT-2:

Slightly modified version of the BT-1. The XBT-2 served as a prototype for the SBD Dauntless.

Bureau Numbers

XBT-1	9745
BT-1	0590-0626
BT-1	0628-0643
XBT-2	0627

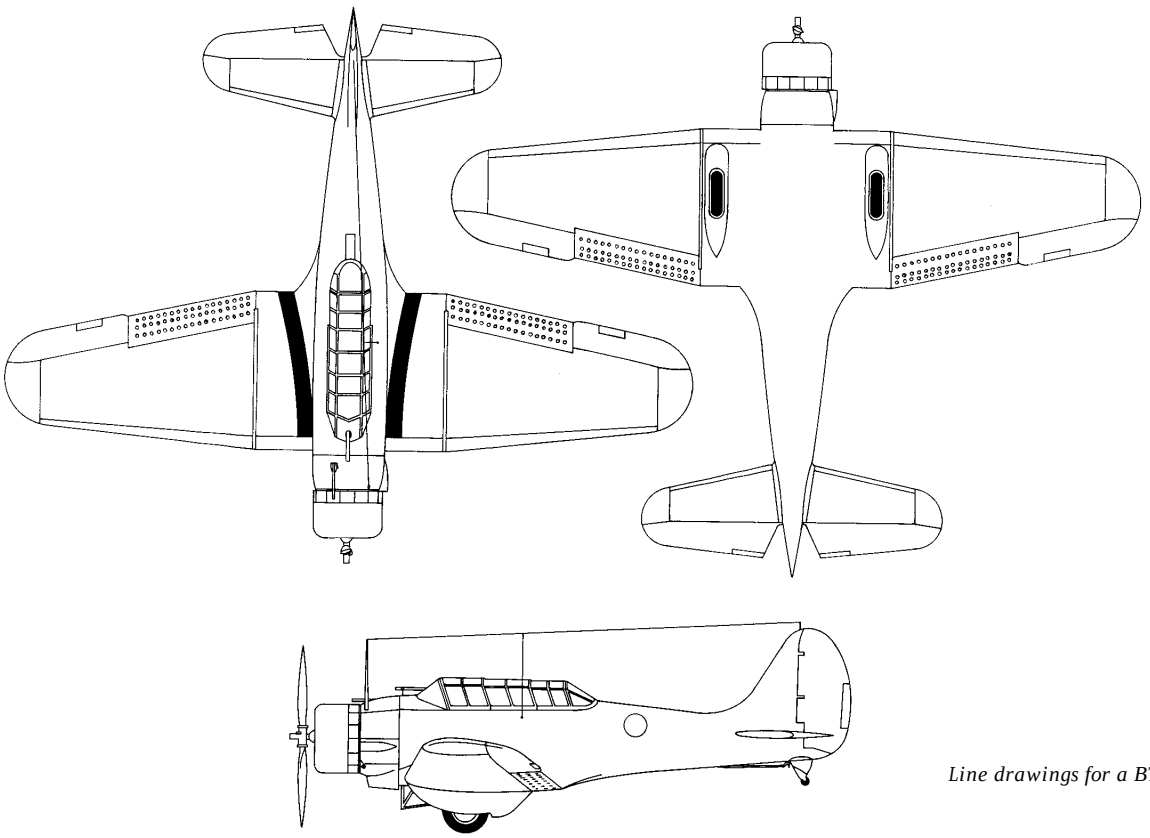

Line drawings for a BT.

CS and SC

In one of those unusual developments that stands out in the history of military procurement this aircraft has a story to tell. The Curtiss Company designed and built the CS torpedo bomber as a large biplane that could be equipped with floats or landing gear and powered by an in-line engine. The Navy gave Curtiss the development contract for this aircraft in June 1922; Curtiss delivered the first articles in early 1924. In the subsequent competition for the production contract, Martin underbid Curtiss and produced the aircraft as the SC.

Curtiss built a total of 6 CS-1 and 2 CS-2 aircraft. The CS-2 had provision for a third float and was powered by a Wright T-3 engine where the CS-1 was powered by a Wright T-2. The CS-2 has some success in setting distance, duration, and speed records.

Martin built 35 SC-1s and 40 SC-2s. The SC was first reported in squadron in January 1924. It was last reported by VT-2 on 19 December 1927. The specifications of the SC are as follows:

Span	56 ft (SC-2 had folding wings that folded along the fuselage)
Length	34 ft
Wing Area	852 sq ft
Gross Weight	9,100 lbs for the SC-1 9,433 lbs for the SC-2
Empty Weight	5,685 lbs for the SC-1 6,019 lbs for the SC-2
Engine	Wright T-3 engine
Maximum bomb load	1,600 lbs

A CS-2, circa mid-1920s.

Bureau Numbers

CS-1	A6500-A6505
CS-2	A6731-A6732
SC-1	A6801-A6835
SC-2	A6928-A6967

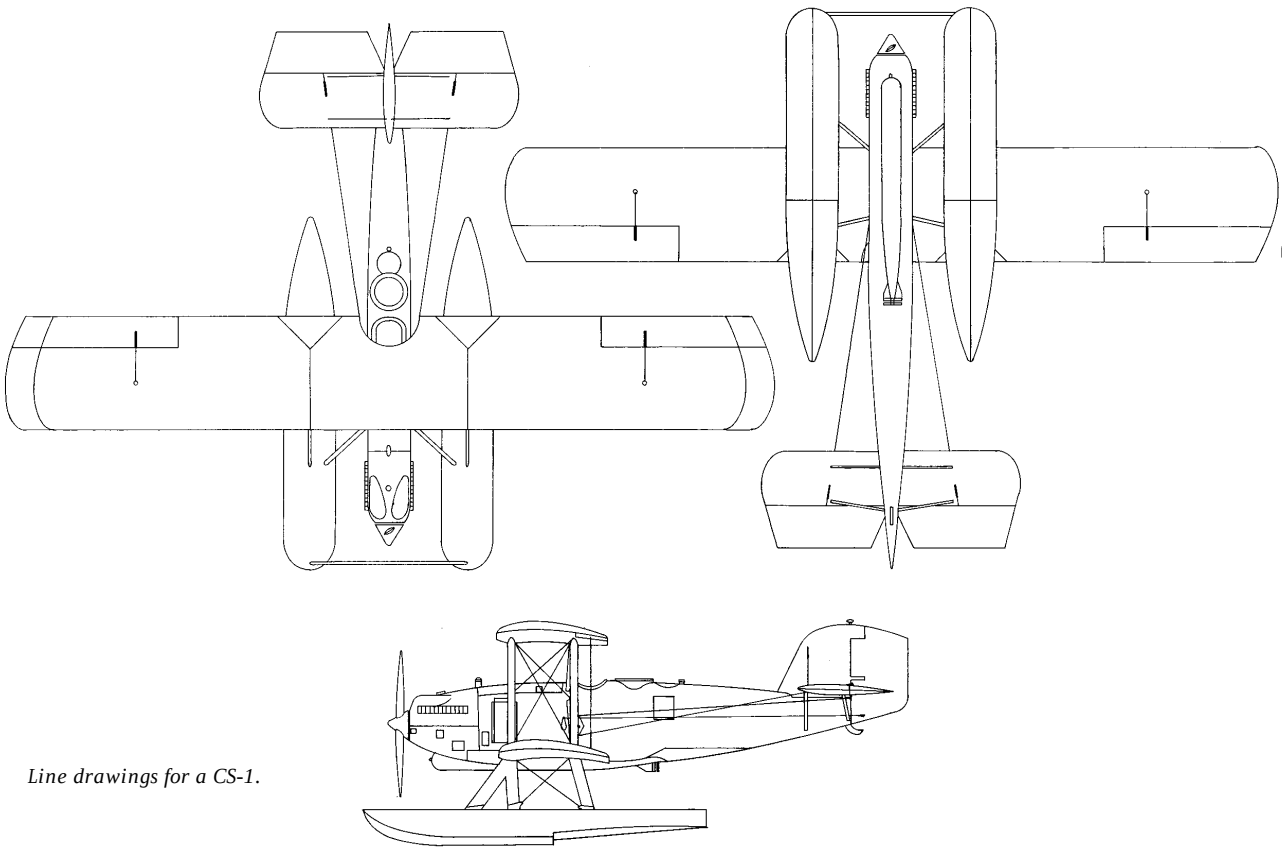

Line drawings for a CS-1.

DT-2

In 1921 the Navy Department ordered a torpedo bomber from the Douglas Aircraft Company. Douglas was a new company at the time and had yet to produce an aircraft for either the Navy or the Army. The company's owner, Donald W. Douglas, Sr., personally designed the aircraft that would fill the Navy's order. Powered by a 400 horsepower Liberty, the DT-1 had folding wings. It made its first flight in November 1921. Although there were three aircraft on the Navy's original order only one was accepted with the designation DT-1, the other two, and all subsequent, were accepted as DT-2.

Eventually this aircraft was supplied to the Navy by four sources. Douglas built 41, the Naval Aircraft Factory built 6 under the designations DT-2 and DT-4, Dayton Wright built 11 DT-2s, and LWF (Lowe, Willard, and Fowler) built 20 DT-2s. The aircraft was first delivered to squadron on 12 December 1922. It was last reported in squadron by VF-6B on 1 April 1928.

The first DT built by Douglas, December 1924.

Models Accepted from the Manufacturer (New Builds)

DT-1:

Initial designation of the DT-2. Crew of one.

DT-2:

Specifications for the seaplane configuration are given below. Some of the landplane's dimensions were slightly different.

Crew	2, aviator and observer
Engine	one Liberty, 400 hp.
Length	37 ft 8 in
Weights:	
full load	7,291 lbs
useful	2,765 lbs
Armament	one 1,835 pound torpedo fixed guns and 2,350 rounds
Range	about 234 nautical miles
Height	15 ft 1 in
Length	37 ft 8 in
Span	50 ft
Wing area	707 sq ft

Other Designations

DT-4:

Same as DT-2 but powered by the Wright T-2, 525 hp engine. The DT-4 was a modification of the DT-2 by the Naval Aircraft Factory.

Bureau Numbers

DT	A6031-A6033
DT-2	A6085-A6095 (Dayton-Wright)
DT-2	A6405-A6422 (Douglas)
DT-2	A6423-A6428 (Naval Aircraft Factory)
DT-2	A6563-A6582 (Douglas)
DT-2	A6583-A6602 (LWF)

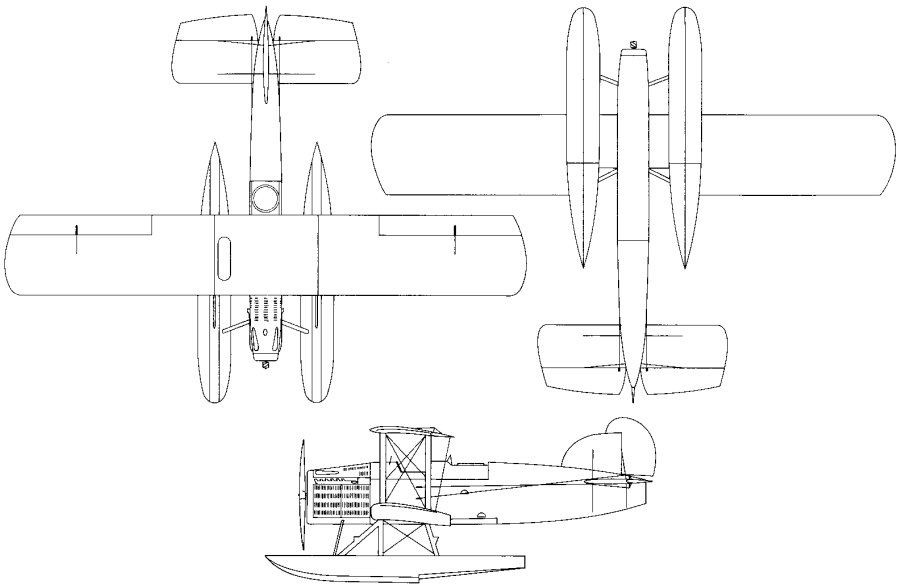

Line drawings for DT-2.

F-4 Phantom II

The F-4 began life as an unsolicited proposal from the McDonnell Aircraft Company to the Navy's Bureau of Aeronautics in 1953. McDonnell envisioned a twin-engine strike/fighter, and the aircraft's initial designation was AH-1, but the Navy soon made changes in the specification to require a high-altitude, long range fighter with the designation F4H-1. The name Phantom II was chosen to declare the aircraft's lineage from McDonnell's FD-1 Phantom which was the first all-jet aircraft the Navy operated. The Phantom II first flew on 27 May 1958 and was first reported in squadron, VF-121, in December 1960. It would prove to be one of the finest aircraft ever operated by the Navy and Marine Corps. Before the last delivery was made in December 1971, the Navy accepted 4,261 Phantom IIs, 3,057 of which were for foreign military sales attesting to the aircraft's international success. It was redesignated F-4 in 1962.

Model Designations Accepted From the Manufacturer (New Builds)

F4H-1F (F-4A):

Two-place, twin-engine, tricycle gear, carrier-based, all-weather fighter carrying missiles and special stores.

F4H-1 (F-4B):

Modification of the F-4A with the J79-GE-8 engine. Specifications for the F4H-1 (F-4B) are as follows:

Crew	Two
Power Plant	Two General Electric J79-8
Range	Maximum Combat 1,606 nautical miles
Weight	
Empty	27,424 lbs
Basic	27,694 lbs
Design	34,500 lbs
Combat	38,018 lbs
Maximum Take-off	56,000 lbs
Maximum Landing	34,000 lbs arrested
Dimensions	
Wing	
Area	530 sq ft
Span	38.4 ft
Length	58.2 ft
Height	16.3 ft
Tread	17.9 ft
Ordnance	AIM-7 Sparrow and AIM-9 Sidewinder missiles

F4H-1P (RF-4B):

F-4B equipped for photography.

F-4J:

Similar to F-4B equipped with the AWG-10 pulse doppler radar and improved avionics.

An F4H-1 Phantom II in flight, circa late 1950s.

Other Designations

TF-4A:
Trainer version. Not carrier deployable

QF-4B:
Modified as a drone or control plane. Suitable for operational use.

F-4G:
F-4B aircraft equipped with two-way tactical digital data communications set (AN/ASW-21) for all nonautonomous modes of flight including automatic vectoring, automatic traffic control and automatic carrier landing.

YF-4J:
Similar to F-4B but equipped with Pulse Doppler Radar.

RF-4J:
Similar to RF-4C but with improved engine. Navy use.

F-4N:
Extensive redesign of F-4B.

F-4S:
F-4J modified for extended service life.

U.S. Air Force Use

F-4C	EF-4C
RF-4C	F-4D
EF-4D	F-4E
RF-4E	YF-4E
F-4F	TF-4F

Foreign Military Use

F-4K	F-4M

Bureau Numbers

F4H-1F (F-4A)	143388-143392, 145307-145317, 146817-146821, 148252-148275
F4H-1 (F-4B)	142259-142260, 148363-148434, 149403-149474, 150406-150493, 150624-150653, 150993-151021, 151397-151519, 152207-152331, 152965-153070, 153912-153950 (canceled)
F4H-1P (RF-4B)	151975-151983, 153089-153115, 157342-157351
F-4J	153071-153088, 153768-153911 154781-154788, 155404-155580 155731-155916, 155904-155916 (canceled), 157242-157309, 158346-158379

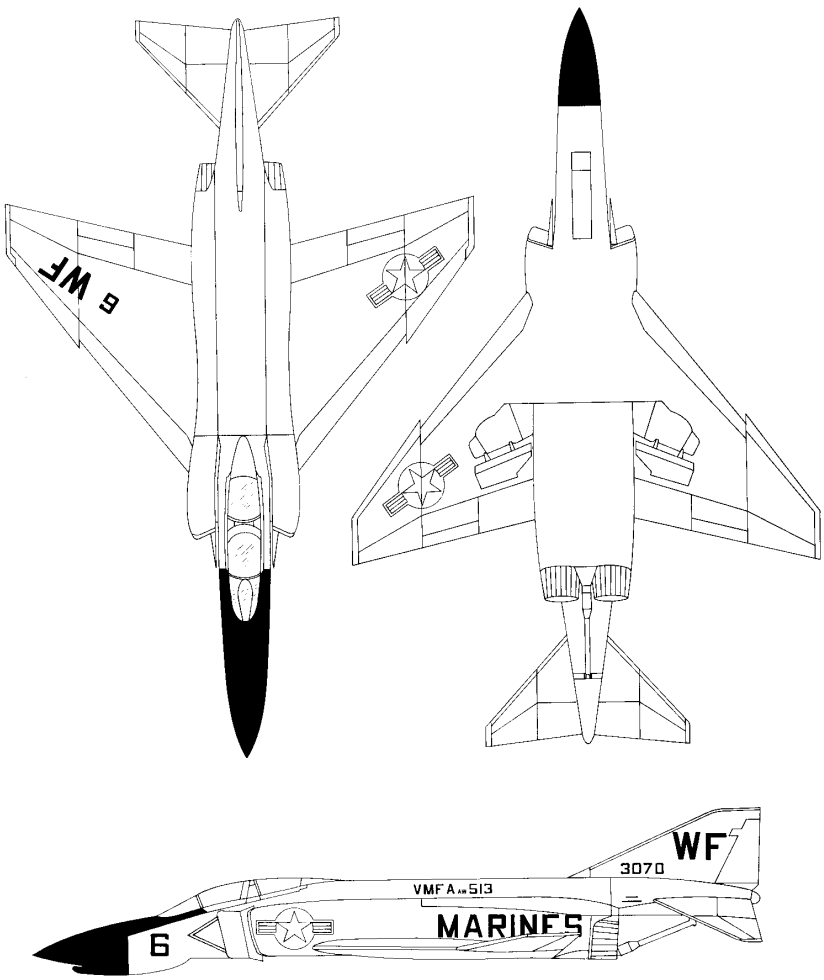

Line drawings for the F-4.

F-5 (T-38) Talon

On 7 October 1969, the U.S. Navy took delivery of its first Northrop T-38 Talon supersonic trainer. This was the first of five that the Navy had ordered for the U.S. Naval Test Pilot School at Patuxent River, Maryland. The aircraft had been in use by the Air Force since 1961. From the development work that produced the T-38 design, Northrop developed the F-5 Tiger II for the Air Force. In 1974, the Navy began using the F-5E Tiger II at the Navy Fighter Weapons School as an adversary aircraft.

An F-5E Tiger II in flight.

Model Designations Accepted from the Manufacturer (New Builds)

F-5E:

Initial version of the Tiger II used by the Navy. The following are characteristics of the F-5E:

Crew	One
Power Plant	Two 5,000-lb General Electric J85-GE-21 turbojets
Weight	
Maximum Takeoff	24,664 lbs
Empty	9,683 lbs
Dimensions	
Wing Span	6 ft 8 in
Wing Area	186 sq ft
Length	48 ft
Height	13 ft 3 in

F-5F:

Upgraded F-5E. Two-place fighter/trainer.

Bureau Numbers

F-5E	159878-159882, 160792-160796, 162307
F-5F	160964-160966

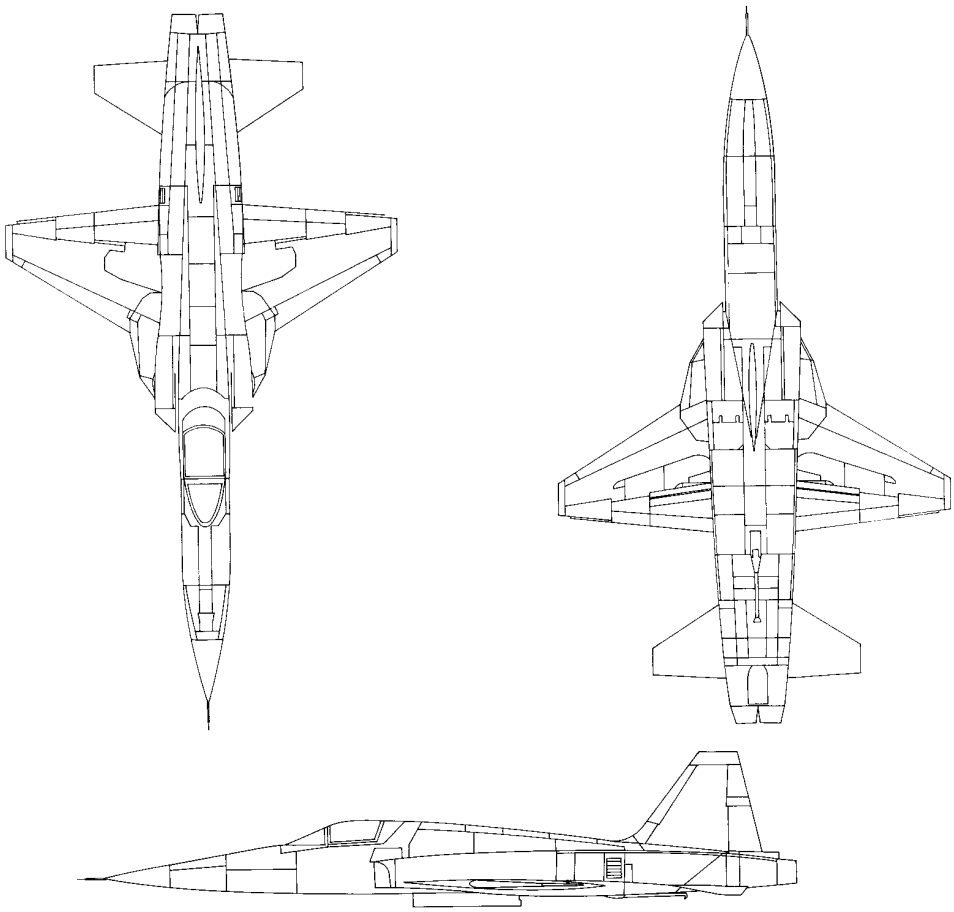

Line drawings for the F-5.

F2H (F-2) Banshee

Beginning its life as the XF2D-1, the Banshee was the last of McDonnell's aircraft to bear the company's original Navy designation letter "D". This change was made by Navy Aircraft Circular Letter 81–47 of 28 August 1947. The immediate successor to McDonnell's FD-1 Phantom, the Banshee bore a great resemblance to the Phantom but was larger. The Navy placed the first contract for this all jet, carrier-based fighter on 2 March 1945. The first flight occurred 11 January 1947. It was first delivered to VF-171 in March 1949 and its last squadron employment was reported by VAW-11 on 30 September 1959. A total of 894 Banshees were procured.

An F2H-3 at the McDonnell Aircraft Company.

Models Accepted from the Manufacturer (New Builds)

XF2H-1:
Experimental version of the F2H-1.

F2H-1:
Powered by two Westinghouse J34-22A/30 engines, 3,150 lbs at takeoff .

F2H-2:
Longer fuselage than the F2H-1, capacity to carry external fuel tanks on wing tips, and powered by two J34-34 engines. Specifications for the F2H-2 are as follows:

Crew	one
Engine	2 Westinghouse 3,250 lbs takeoff J34-34
Weights:	
empty	10,321 lbs
combat	15,540-17,742 lbs
Armament:	
bombs	1,540 lbs maximum
guns	four 20 mm nose (M3)
Combat range	755–1,280 nautical miles
Height	14 ft 6 in
Length	42 ft 1 in
Wing span	44 ft 10 in
Wing area	294 sq ft

F2H-2N:
F2H-2 configured for night operations.

F2H-2P:
F2H-2 configured for photographic reconnaissance.

F2H-3 (Became F-2C):
Basically the F2H-2 adapted to all-weather operations.

F2H-4 (Became F-2D):
The F2H-3 with improved radar equipment.

Bureau Numbers

XF2H-1	99858-99860
F2H-1	122530-122559
F2H-1	122990-123015
F2H-2	123204-123299
F2H-2N	123300-123396
F2H-2	123314-123396 (123383-123396 canceled)
F2H-2	124940-125071
F2H-2P	125072-125079
F2H-2	125500-125505
F2H-2	125649-125679
F2H-2P	125680-125706
F2H-3	126291-126350
F2H-4	126351-126353
F2H-3	126354-126489
F2H-2P	126673-126695
F2H-3	127493-127546
F2H-4	127547-127693
F2H-3P	127694-127695 (all canceled)
F2H-3	128745-128856 (all canceled)
F2H-2	128857-128886
F2H-3/3P	129050-129132 (all canceled)

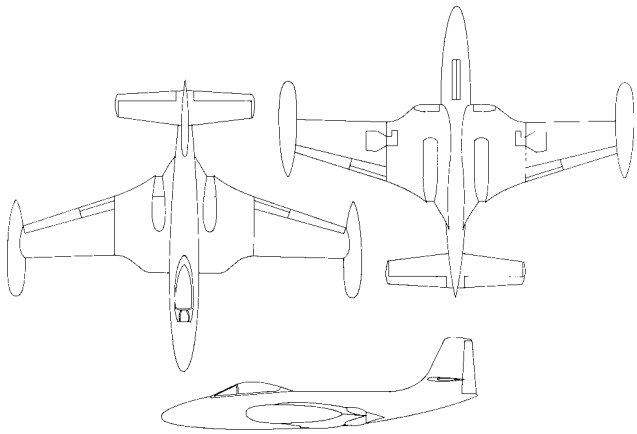

Line drawings for the F2H.

F3D (F-10) Skyknight

In April 1946, the U.S. Navy awarded the Douglas Company a contract to produce the first carrier-based, all-weather, jet- powered night interceptor. The aircraft first flew March 1948 and was delivered to its first squadron, VC-3, in February 1951. The last delivery was in October 1953. A total of 268 aircraft were accepted. It was last reported in squadron in May 1970. The aircraft's designation was changed to F-10 in 1962. The production versions F3D-1 and F3D-2 both deployed. Plans for an F3D-3 never materialized and no aircraft by that designation was ever accepted.

An XF3D-1 at NAS Patuxent River, Maryland, circa 1950.

Model Designations Accepted from the Manufacturer (New Builds)

XF3D-1:

Experimental variant of the Skyknight. Three articles were built.

F3D-1 (F-10A):

Twenty-eight F3D-1s were eventually procured. The F3D-1 designation was changed to F-10A in 1962. Characteristics of the F3D-1 are as follows:

Crew	Two
Power Plant	Two 3,000-lb Westinghouse J34-WE-38
Combat Radius	675 nautical miles
Weight	
Gross	22,609 lbs
Dimensions	
Wing	
Area	401 sq ft
Span	50 ft
Length	45 ft 5 in
Height	16 ft 1 in
Ordnance	Four 20-mm nose guns with 800 rounds.

F3D-2 (F-10B):

This second variant of the Skyknight used the 3,400 lb Westinghouse J34-WE-36 engine. A total of 237 were procured. This designation was changed to F-10B in 1962.

Other Designations:

F3D-1M and -2M (MF-10B):

F3D-1 and F3D-2 equipped with radar and provisions for launching missiles. The F3D-2M designation was changed to MF-10B in 1962. The F3D-1 was no longer in service in 1962.

F3D-2Q (EF-10B):

F3D-2 modified for electronic warfare. One of the earliest tactical jet aircraft modified for the Electronic Warfare role. The designation was changed to EF-10B in 1962.

F3D-2T:

F3D-2 converted to serve as a radar trainer. The designation was no longer in service in 1962.

F3D-2T2 (TF-10B):

F3D-2T equipped with AN/APG-51 radar. The designation was changed to TF-10B in 1962.

Bureau Numbers

XF3D-1	121457-121459
F3D-1	123741-123770
F3D-2	124595-124664
	125783-125882
	127019-127085
F3D-3	125883-125892 all canceled

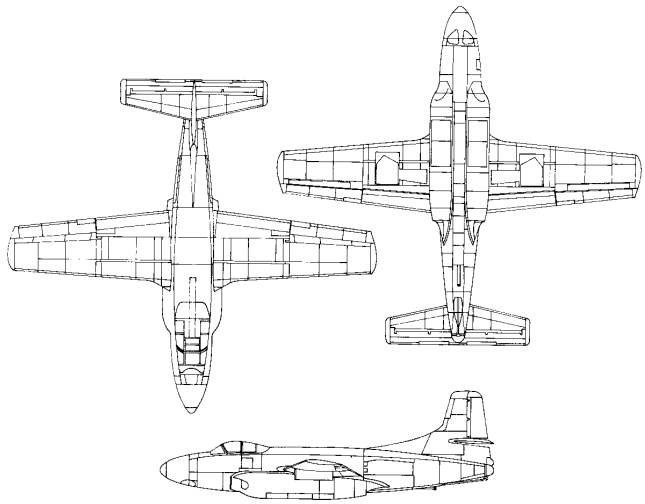

Line drawings for the F3D.

F3H (F-3) Demon

In 1949, the Navy awarded the McDonnell Company a contract to produce a carrier-based, jet-powered, all-weather interceptor designed as a successor to the F2H Banshee and incorporating the latest technology addressing the questions about jet-powered carrier-based tactical planes. The Demon would become one of the earliest Navy fighters to deploy with air-to-air missiles and the only single-engine fighter McDonnell ever built for the Navy. The Demon made its initial flight in August 1951. The first delivery was to VF-14 on 7 March 1956. The F3H fought a long and ultimately unsuccessful battle with its power plant; while the aircraft has its place in naval aviation history, it never fully met expectations. The last delivery occurred in November 1959. A total of 519 articles were accepted and it was last reported in squadron by VF-161 in August 1964. The F3H was redesignated the F-3 in 1962.

Model Designations Accepted from the Manufacturer (New Builds)

XF3H-1:

The experimental version of the Demon. Two articles were accepted by the Navy. It was initially intended to be powered by the Westinghouse J40-WE-8 engine, which soon changed to the J40-WE-10, but production problems with the -10 engine led to one of the XF3Hs being powered by the Westinghouse J40-6. The production problems resulted in a decision to use the Allison J71-A-2 as a back-up engine. The production version of the Westinghouse J40-WE-8 was designated -22 and it was this engine that would power the initial production F3H-1s, while the Allison J71-A-2 powered the later articles.

F3H-1:

First production version of the Demon. The F3H-1 designation was never changed since the -1 was no longer in service at the time of the redesignation in 1962.

An XF3H-1 Demon taking off on a routine test flight, May 1953.

F3H-1N:

All-weather version of the F3H-1.

F3H-2 (F-3B):

Production version. Powered by Allison J71-A-2 engine. Redesignated F-3B in 1962.

F3H-2M (MF-3B):

The F3H-2M was equipped to launch four Sparrow or Sidewinder missiles. The aircraft was redesignated MF-3B in 1962. Its characteristics were as follows:

Crew	One
Power Plant	One 14,400 lb Allison J71-A-2B engine
Combat Radius	302 nautical miles
Weight	
Maximum Takeoff	39,000 lbs
Basic	22,028 lbs
Empty	21,292 lbs
Dimensions	
Wing	
Area	519 sq ft
Span	35 ft 4 in
Length	58 ft 11.5 in
Height	14 ft 6.6 in
Ordnance	Four Sparrow or Sidewinder mis siles; four 20-mm fixed forward-firing guns with 600 rounds.

F3H-2N (F-3C):

All-weather version of the F3H-2. Also improved fire control. Redesignated F-3C in 1962.

Other Designations

F3H-1P and -2P:

Equipped for reconnaissance.

Bureau Numbers

F3H-1	133389-133488 canceled, 137096-137131 canceled, 137156-137215, 137859-137886 canceled, 138660-138819 canceled
F3H-1N	133489-133554
F3H-2	146328-146339, 143403-143492, 146741-146816 canceled, 143403-143492, 145202-145306
F3H-2M	133569, 133623-133638, 137033-137095
F3H-2N	133545-133568, 133570-133622, 136966-137032
F3H-2P	137132-137155 canceled

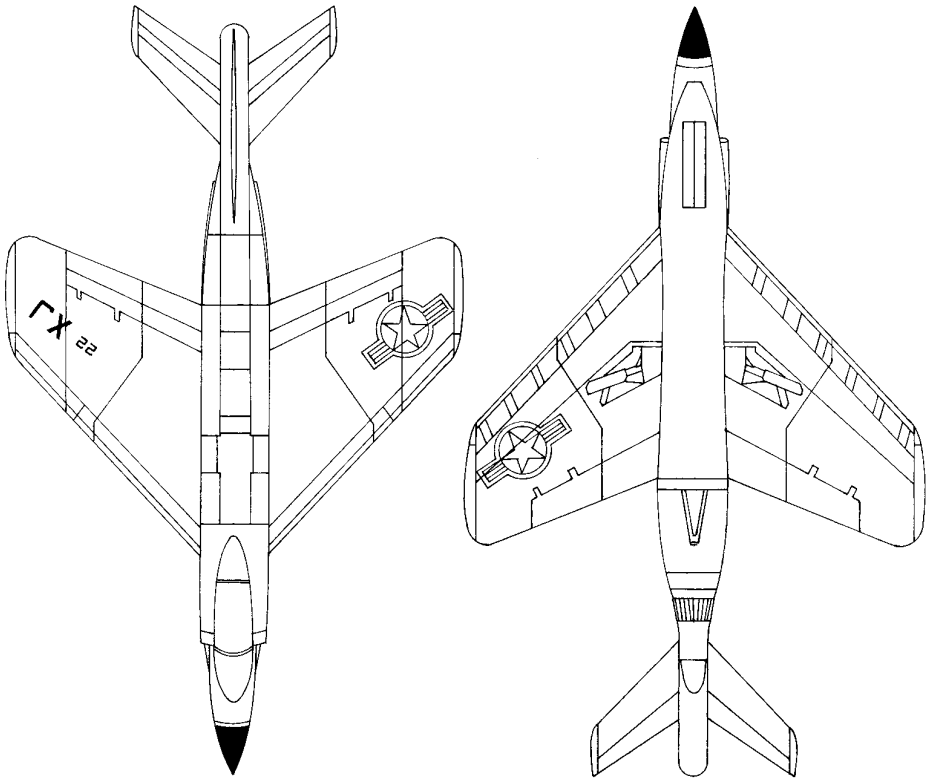

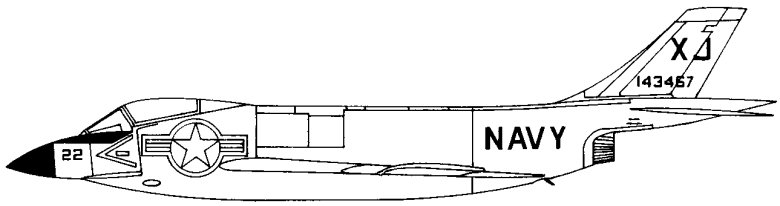

Line drawings for an F3H.

F4D (F-6) Skyray

The Navy's need for a carrier-based, short-range fighter led to a contract award in December 1948 to Douglas for the aircraft design that became the F4D Skyray. To meet the requirement for a high rate of climb, Douglas designers came up with a swept-back modified delta wing on a tailless airframe. The F4D first flew in January 1951, but due to delays and delivery of the power plant initially intended, Composite Squadron THREE (VC-3) did not accept the first Skyray until April 1956. It was last reported in squadron by Marine Fighter Squadron ONE ONE FIVE (VMF-115) in February 1964. The F4D-1 was redesignated F-6A in 1962. A total of 421 Skyrays were accepted.

An XF4D-1 Skyray landing aboard Coral Sea (CVA 43), October 1953.

Model Designations Accepted from the Manufacturer (New Builds)

XF4D-1:
Experimental version of the F4D-1.

F4D-1:

Crew	One
Power Plant	One Pratt & Whitney 8,000 lb J57-P-2
Combat Radius	200 nautical miles
Weight	
Maximum Takeoff	23,050 lbs from catapult
Basic	15,450 lbs
Empty	15,225 lbs
Dimensions	
Wing	
Area	557 sq ft
Span	33 ft 6 in
Length	58 ft 11.5 in
Height	13 ft
Ordnance:	Wing provisions for rockets.Four 20 mm fixed forward-firing guns with 280 rounds.

Bureau Numbers

XF4D-1	124586-124587
F4D-1	134744-134973, 130740-130751, 139030-139207, 136163-136392 all canceled

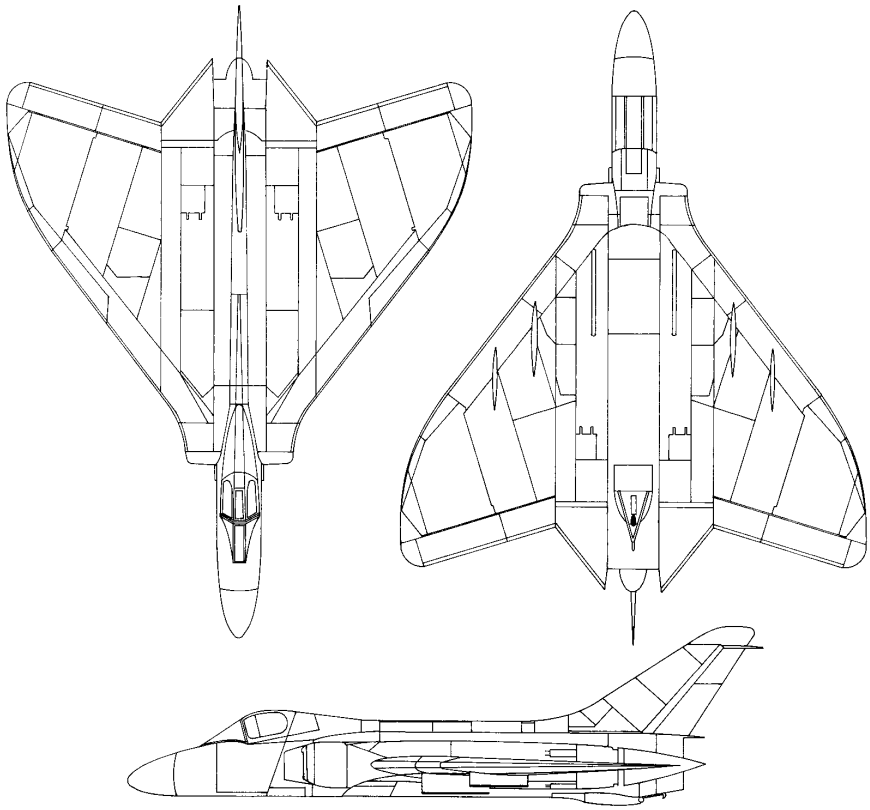

Line drawings for the F4D-1.

F4U/FG/F3A Corsair

The Navy awarded a contract to the Vought Company on 30 June 1938 to produce a new single-seat, carrier-based fighter aircraft. The contract had resulted from a requirement the Navy had released to industry earlier that year. Vought engineers responded with a design that has become legendary because of its propeller of unusually large diameter and inverted gull wings which kept the main landing gear short and retractable straight back, but the fuselage stayed high enough to compensate for the large blades driven by the Pratt & Whitney R-2800 Double Wasp, the first 2,000 horsepower engine ever to power a Navy fighter aircraft. The Navy designated the airplane F4U.

The XF4U-1 made its initial flight on 29 May 1940. The first squadron delivery of the Corsair occurred on 3 October 1942 when VF-12 accepted an F4U-1. The Navy accepted the last delivery of a Corsair in January 1953.

Because production orders were so heavy during the Second World War, the Navy gave production contracts to Goodyear, who built the Corsair under the designations FG-1 and FG-1D, and to Brewster who built the aircraft as the F3A-1. Vought built 7,829 Corsairs, of which 1,067 were for foreign use; Goodyear built 4,006, of which 989 were for foreign use; and Brewster built 735, of which 430 were for foreign use. A modified version designed to fulfill a strike role was furnished by Vought under the designation AU-1.

Models Accepted from Vought (New Builds)

XF4U-1:

Experimental version of the F4U-1.

F4U-1:

Specifications for the F4U-1 are as follows:

Crew	one
Engine	one R-2800-8 or -8W
Propeller	Hamilton Standard, constant speed, three-bladed hydromatic; 13 ft 3 in
Wing span	40 ft 11 in
Length	33 ft 4 in
Height	18 ft 3 in
Wing area	314 sq ft
Weights:	
empty	8,873 lbs
gross	13,090 lbs
Armament	six 50 calibre fixed guns and 2,350 rounds
Combat radius	about 365 nautical miles

An F4U-1D Corsair.

F4U-1B:

F4U-1 for the United Kingdom.

F4U-1C:

Same as F4U-1 but equipped with four 20 mm guns and 924 rounds. Later redesignated F4U-1B.

F4U-1D:

Same as F4U-1 but equipped with wing points for carrying releasable tanks, bombs, or rockets.

F4U-4:

Same as F4U-1D but powered by Pratt & Whitney R-2800-18W engine. Also, an improved cockpit arrangement.

F4U-4B:

Same as the F4U-4 for the United Kingdom

F4U-4C:

Same as F4U-4 but with four 20 mm guns and 924 rounds. Later redesignated F4U-4B.

F4U-4P:

F4U-4 equipped for photography.

F4U-5:

Same as F4U-4 except for 2-stage engine (Pratt & Whitney R-2800-32W).

F4U-5N:

Same as F4U-5 but equipped for night fighting.

F4U-5P:

Same as F4U-5 but equipped for photography.

F4U-7:

The end of the Corsair production line. The F4U-7 was similar to the AU-1 except for being powered by the Pratt & Whitney R-2800-18W engine. These aircraft were built for France under the Military Assistance Plan.

AU-1:

F4U-5 but equipped to fulfill a ground support attack role, this version was powered by the Pratt & Whitney R-2800-833WA engine. Armament included four 20 mm guns with 924 rounds. Maximum bomb

capacity was 8,200 pounds. There was a new instrument panel, relocated oil coolers, and additional armor over the F4U-5.

Models Accepted from Goodyear (New Builds)

FG-1:
F4U-1 built by Goodyear.

FG-1B:
F4U-1B built by Goodyear for the United Kingdom.

FG-1A:
F4U-1A built by Goodyear.

FG-1D:
F4U-1D built by Goodyear.

Models Accepted from Brewster (New Builds)

F3A-1:
F4U-1 built by Brewster.

Other Designations

F4U-5NL:
F4U-5N equipped for cold weather operations.

FG-1E:
FG-1D equipped with special radar.

FG-3:
Development of FG-1D with two-stage turbo-supercharged engine.

FG-4:
Same as F4U-4.

F2G-1:
Similar to FG-1 except engine and rearrangement of cockpit and cowling.

F2G-2:
Carrier version of the F2G-1 with folding wings, and provisions for launching and recovery.

F3A-1D:
Same as F4U-1D.

Bureau Numbers

F4U-1	02153-02156
XF4U-1	1443
F4U-1	02158-02736
F4U-1	03802-03841
F4U-1	17392-17455
F4U-1A	17456-17515
XF4U-3	17516
F4U-1A	17517-18121
F4U-1	18122-18191
F4U-1	49660-49762
XF4U-4	49763
F4U-1	49764-50300
XF4U-4	50301
F4U- 1	50302-50359
F4U-1D	50360-50659
F4U-1	55784-56483
F4U-1D	57084-57656
F4U-1C	57657-57659
F4U-1D	57660-57776
F4U-1C	57777-57791
F4U-1D	57792-57965
F4U-1C	57966-57983
F4U-1B	62915-62929
F4U-4P	62930
F4U-4B	62931-62949
F4U-4P	62950
F4U-4B	62951-62969
F4U-4P	62970
F4U-4B	62971-62989
F4U-4P	62990
F4U-4B	62991-63009
F4U-4P	63010
F4U-4B	63011-63029
F4U-4P	63030
F4U-4B	63031-63049
F4U-4P	63050
F4U-4B	63051-63069
F4U-4P	63070
F4U-4B/P	63071-63914 (63072-63914 canceled)
XF4U-4	80759-80763
F4U-4	80764-82177
F4U-1C	82178-82189
F4U-1D	82190-82259
F4U-1C	82260-82289
F4U-1D	82290-82369
F4U-1C	82370-82394
F4U-1D	82395-82434
F4U-1C	82435-82459
F4U-1D	82460-82539
F4U-1C	82540-82582
F4U-1D	82583-82632
F4U-1C	82633-82639
F4U-1C	82740-82761
F4U-1D	82762-82854 (82853-82854 canceled)
F4U-4	96752-97295
XF4U-5	97296
F4U-4	97297-97363
XF4U-5	97364
F4U-4	97365-97414
XF4U-5	97415
F4U-4	97416-97531
F4U-4	105176-106875 (105176-106875 canceled)
F4U-4	114529-115728 (114529-115728 canceled)
F4U-5	121793-121803
F4U-5P	121804
F4U-5	121805-121815
F4U-5N	121816
F4U-5	121817-121831

F4U-5N	121832-121833
F4U-5	121834-121851
F4U-5N	121852-121853
F4U-5	121854-121871
F4U-5N	121872-121874
F4U-5	121875-121890
F4U-5N	121891-121893
F4U-5	121894-121911
F4U-5N	121912-121915
F4U-5	121916-121931
F4U-5N	121932-121925
F4U-5P	121936
F4U-5	121937-121951
F4U-5N	121952-121955
F4U-5P	121956-121957
F4U-5	121958-121972
F4U-5N	121973-121976
F4U-5P	121977-121978
F4U-5	121979-121994
F4U-5N	121995-121998
F4U-5P	121999-122002
F4U-5	122003-122014
F4U-5N	122015-122018
F4U-5P	122019-122022
F4U-5	122023-122036
F4U-5N	122037-122040
F4U-5	122041-122044
F4U-5P	122045-122048
F4U-5	122049-122057
F4U-5N	122058-122061
F4U-5P	122062-122065
F4U-5	122066
F4U-5	122153-122166
F4U-5P	122167-122206
F4U-5N/NL	123144-123203
F4U-5N	124441-124503
F4U-5NL	124504-124522
F4U-5	124523
F4U-5NL	124524-124560
F4U-5NL	124666-124709
F4U-5N	124710-124724
F4U-7	133652-133731
F4U-7	133819-133832
XAU-1	124665
AU-1	129318-129417
AU-1	133833-133843
XF2G-1	12992
FG-1D	12993-13470
XF2G-1	13471-13472
FG-1D	13473-14690
XF2G-1	14691-14695
FG-1D	14696-14991
FG-1D	67055-67254 (67100-67254 canceled)
FG-4	67255-67754 (all canceled)
FG-1	76139-76148
FG-1D	76149-76449
FG-3	76450
FG-1	76451-76739
FG-1D	87788-88453
F2G-1	88454-88458
F2G-2	88459-88871 (88464-88871 canceled)
FG-1D	92007-93301 (92702-93301 canceled)
F3A-1	04515-04774
F3A-1	08550-08797
F3A-1	11067-11646 (11294-11646 canceled)

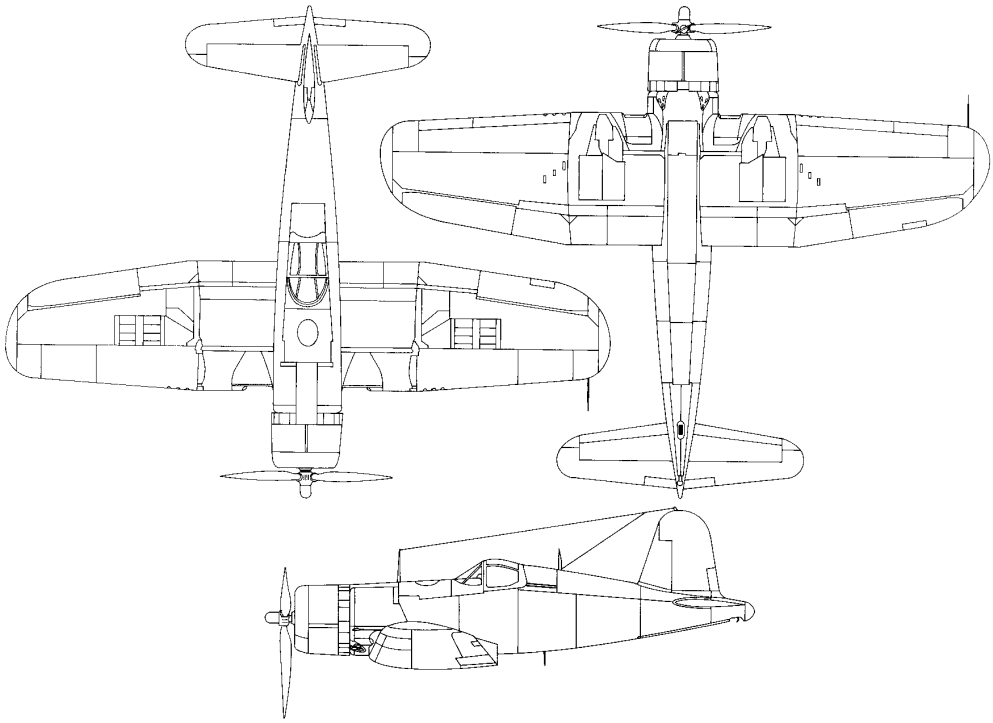

Line drawings for the F4U-1.

F6F Hellcat

Among the Navy's successful aircraft, the Hellcat enjoys a most, if not the most, special place. The Grumman Company's F4F Wildcat served well by taking the heat from the Japanese Zero while at a significant, but hardly overwhelming degree, technologically inferior. The F6F, begun in 1941, would deploy in the summer of 1943, quickly prove itself the Zero's superior, and become the Navy's frontline fighter in the long march across the Pacific to Tokyo Harbor and the end of World War II. The Navy accepted a total of 12,275 Hellcats; it was last reported in squadron by VC-4 on 31 August 1953.

Models Accepted from the Manufacturer (New Builds)

XF6F-1/2/3:

The original contract, dated 30 June 1941, called for two prototypes to be designated XF6F-1 and powered by the Wright R-2600 engine. Before they were built, the Navy decided to change the powerplants and equip one of the prototypes with the Pratt & Whitney R-2800. The aircraft powered with the Wright R-2600 was accepted as XF6F-1, the one powered by the Pratt & Whitney R-2800 was accepted as the XF6F-3. A third aircraft was equipped with the Wright R-2600 that was fitted with a turbo-supercharger and accepted as XF6F-2.

F6F-3:

Specifications for the F6F-3 are as follows:

Crew	one
Length	33 ft 7 in
Span:	
open	42 ft 10 in
folded	16 ft 2 in
Wing area	334 sq ft
Height	13 ft 1 in
Weight:	
empty	9,109 lbs
combat	15,509 lbs
Range	1,335 statute miles
Engine	Pratt & Whitney R-2800-10
Ordnance:	
bombs	2,000 lbs
guns	six .50 cal. fixed forward firing

F6F-3E:

F6F-3 equipped with APS radar.

F6F-3N:

F6F-3 equipped for night operations.

XF6F-4:

This was the original XF6F-3 equipped with a two-speed Pratt & Whitney R-2800 engine.

F6F-5:

The main differences between the F6F-3 and the F6F-5 were in a reshaped windshield, increased armor,

An F6F-3 Hellcat, circa mid-1943.

increased strength, a close fitting cowl, spring tab ailerons, and a smoother finish. The F6F-5 has about 15 percent increase in speed over the F6F-3.

F6F-5N:
The F6F-5 equipped for night operations.

XF6F-6:
Experimental version, never in production. Powered by a new and more powerful Pratt & Whitney R-2800 engine called the "C" series. It had a four-bladed propeller.

Other Designations

F6F-5D:
Modified as a drone directing aircraft.

F6F-5K:
Modified as a target or assault drone.

F6F-5P:
Equipped for photo-reconnaissance.

Bureau Numbers

XF6F-1/4	02981
XF6F-1/3	02982
F6F-3	04775-04958
F6F-3	08798-09047
F6F-3/3N	25721-26195
F6F-3/3N/3E	39999-43137
F6F-5/5N	58000-58999
F6F-3	65890-66244
F6F-5	69992-70187
XF6F-6	70188
F6F-5/5N/5P	70189-70912
XF6F-6	70913
F6F-5/5N/5P	70914-72991
F6F-5/5N/5P	77259-80258
F6F-5	93652-94751 (94522-94751 canceled)
F6F-5N	108226-109272 (108226-109272 canceled)
F6F-5	111349-111748 (all canceled)

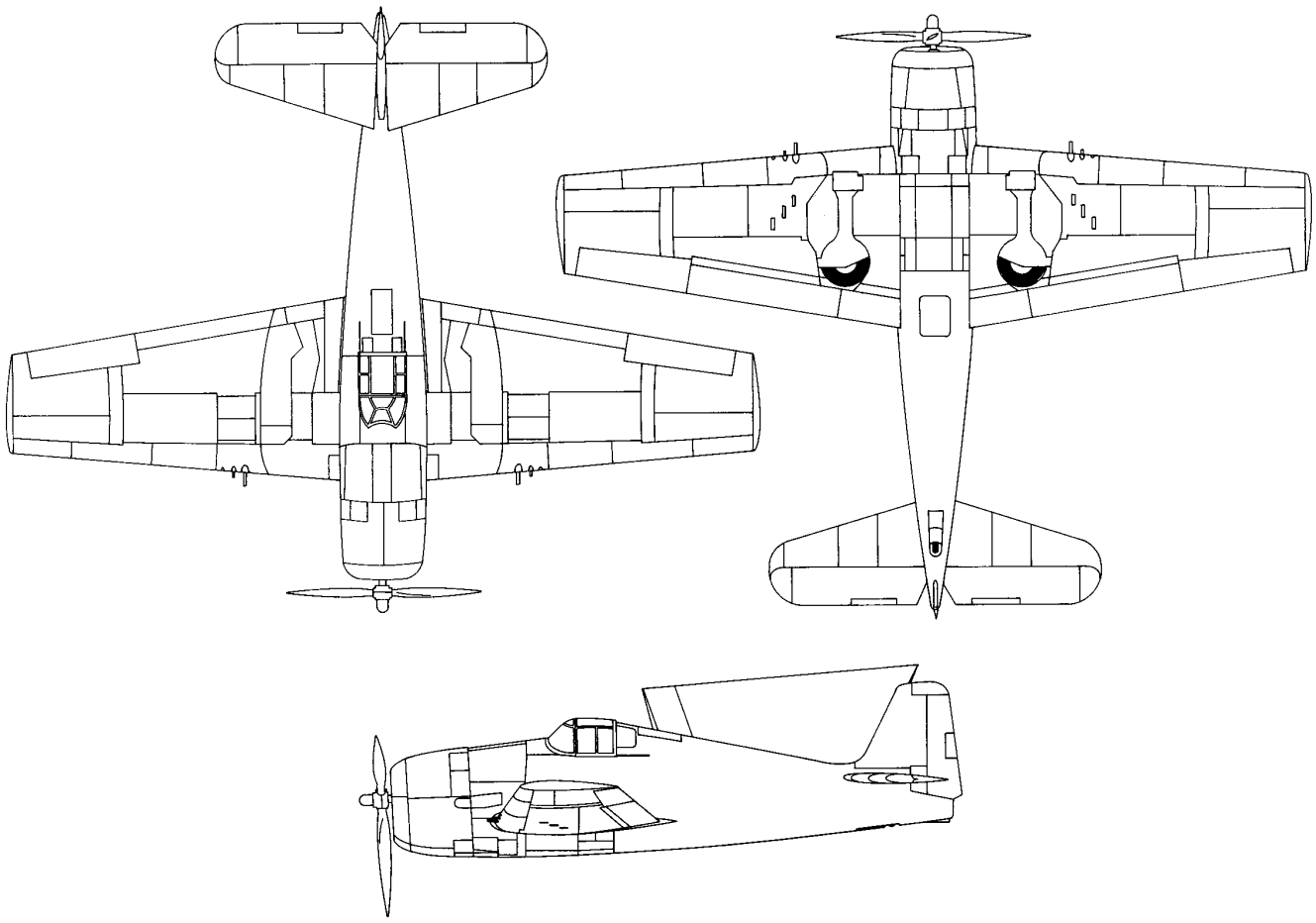

Line drawings for an F6F-3.

F7F Tigercat

Another of the Navy's fighters produced in World War II but never saw action in that conflict and was quickly replaced by jet power. The Tigercat was a twin-engine, tricycle landing gear, carrier-based plane with greater air-to-ground capability than was normal in a Navy aircraft designated fighter. The Navy awarded Grumman the initial contract for the F7F in June 1941. The plane first flew on 3 November 1943. VMF-911 and VMF(N)-531 took the initial deliveries in January 1944. Some F7Fs saw land-based action with the Marine Crops in Korea. On 31 January 1954, VJ-62 reported a F7F-3N and -4N, the last time Tigercats were reported in squadron. A total of 364 were accepted.

Model Designations Accepted from the Manufacturer (New Builds)

XF7F-1:

Experimental version of the F7F-1.

F7F-1N:

Night fighter powered by two Pratt & Whitney R-2800-22W engines and equipped with radar.

XF7F-2N:

Experimental version of the F7F-2N.

F7F-2N:

Same as F7F-1N but equipped for two crewmen, a pilot and a radar operator. Powered by two Pratt & Whitney R-2800-22W engines.

An XF7F-1 Tigercat in flight, December 1943.

F7F-3:

This version was similar to the F7F-2N but built for pilot only; the radar operator's place had been fitted with an extra fuel tank. It was powered with the upgraded Pratt & Whitney R-2800-34W.

F7F-3N:

Another two-place plane. The radar operator station was restored in place of the fuel tank. Also, this version was equipped with a nose radome.

F7F-4N:

Structurally modified to correct most of the carrier suitability problems encountered in earlier versions. The F7F-4N was a two-place night fighter with radar operator and AN/APS-19 radar in a nose radome and powered by two Pratt & Whitney R-2800-34W engines. Characteristics for the F7F-4N are as follows:

Crew	Two
Power Plant	Two 1,700 hp Pratt & Whitney R-2800-34W
Combat Radius	305 nautical miles
Weight	
Maximum Takeoff	24,139 lbs
Basic	18,518 lbs
Empty	17,518 lbs
Dimensions	
Wing	
Area	455 sq ft
Span	51 ft 6 in
Length	46 ft 11 in
Height	16 ft 7 in
Ordnance:	Four 20-mm fixed wing guns with 800 rounds. Provisions on wings and fuse lage for launching rockets, bombs, torpedoes and mines. Maximum bomb capacity was 4,600 lbs

Other Designations:

F7F-1:

A designation that never existed anywhere but on paper. No bureau number was assigned to an F7F-1 and no record has yet surfaced to indicate that an aircraft with the F7F-1 designation was accepted into Navy inventory.

F7F-2P:

F7F-2 modified for photographic reconnaissance.

F7F-3P:

F7F-3 modified for photographic reconnaissance.

Bureau Numbers

XF7F-1	03549-03550
F7F-3	69740-69989
F7F-1N	80259-80260
XF7F-2N	80261
F7F-1N	80262-80293
F7F-2N	80294-80358
F7F-3	80359-80547
F7F-4N	80548
F7F-3N	80549-80608
F7F-4N	80609-80620
F7F	80621-80758 canceled
F7F-3	116729-117728

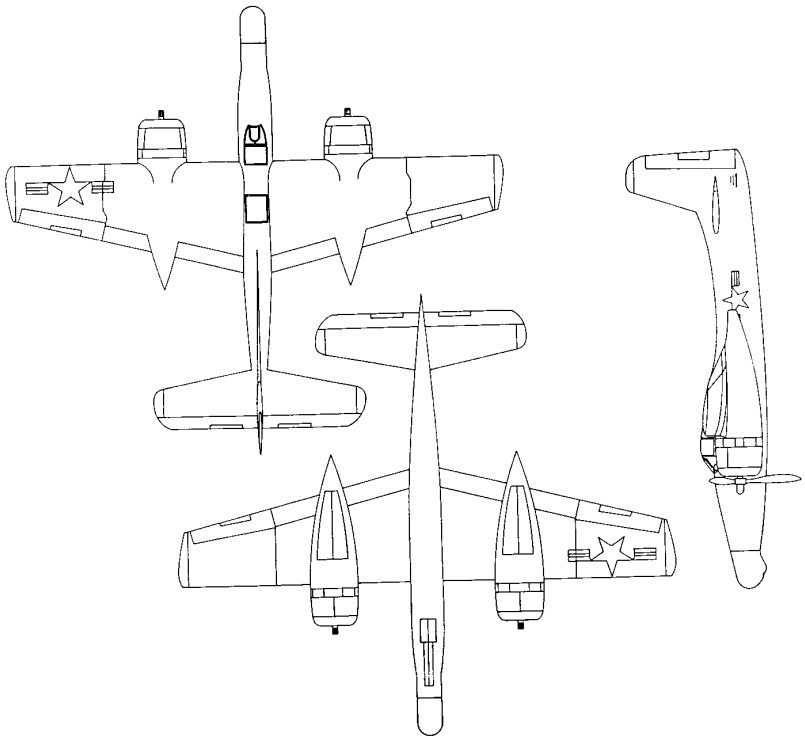

Line drawings for the F7F.

F7U Cutlass

The Vought Company designed the Cutlass as a tailless, carrier-based fighter for high speed and high rate of climb. Three models were designed, F7U-1, F7U-2 and F7U-3, but owing to problems with the power plant in the F7U-2, only the F7U-1 and F7U-3 were produced. Experience with the F7U-1 indicated that the F7U-3 would benefit from redesign of the airframe. The most obvious of the changes was in the nose section. All F7U-1s served as trainers; only the F7U-3 deployed in the fleet as a fighter aircraft.

The Navy awarded Vought a contract for the XF7U-1 on 25 June 1946. The aircraft first flew in August 1948. The first squadron delivery of an F7U-3 did not occur until May 1954; the Cutlass was last reported in squadron less than four years later on 30 November 1957. A total of 305 F7Us were delivered to the Navy.

An F7U-3 Cutlass during a test flight, with an F6U-1 Pirate chase plane.

Models Accepted from the Manufacturer (New Builds)

XF7U-1:

Experimental model of the F7U-1.

F7U-1:

Initial production model of the Cutlass. Used for training only.

F7U-3:

Production model assigned to fleet squadrons. Specifications for the F7U-3 are as follows:

Crew	One
Engine	2 Westinghouse 4,000 lbs J46-WE-8 engines
Weights:	
empty	18,500 lbs
combat	24,068 lbs
Armament:	
bombs	four pylons, 2,000 lbs
guns	four 20 mm cannon
Range	about 575 nautical miles
Height	14 ft 4 in
Length	43 ft 1 in
Wing span	39 ft 8 in

F7U-3M:

F7U-3 with provisions for launching four guided missiles.

F7U-3P:

F7U-3 equipped for photographic reconnaissance.

Bureau Numbers

XF7U-1	122472-122474
F7U-1	124415-124434 (124429-124434 canceled)
F7U-2	125322-125409 (all canceled)
F7U-3	125410-125411 (all canceled)
F7U-3	128451-128478
F7U-3	129545-129676
F7U-3M	129677
F7U-3	129678-129697
F7U-3M	129698-129744
F7U-3P	129745-129756
F7U-3	136912-136963 (all canceled)
F7U-3P	136964-136965 (all canceled)
F7U-3M	139868-139917

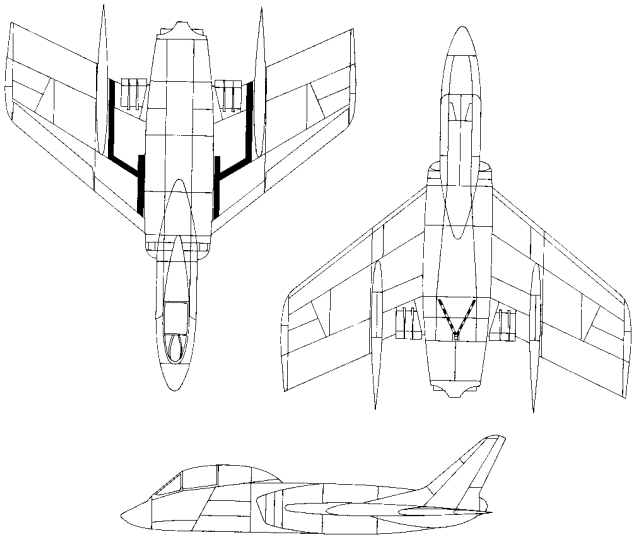

Line drawings for an F7U-3.

F8F Bearcat

In November 1943, the Navy awarded Grumman a contract to develop a fighter aircraft that could operate from all carriers rather than being limited to the largest of ships. To meet the requirement, Grumman engineers pursued a derivative of the F6F Hellcat. Designated the F8F Bearcat by the Navy, Grumman's Design G-58 first flew on 31 August 1944. It was delivered on 21 May 1945, but was not ready for service before World War II ended. The F8F was the last piston engine fighter Grumman would build for the Navy. A total of 1,263 Bearcats were procured.

Models Accepted from the Manufacturer (New Builds)

XF8F-1:
Experimental version of F8F-1.

XF8F-1N:
Experimental version of the F8F-1N night fighter.

XF8F-2:
Experimental version of the F8F-2.

F8F-1:
Specifications for the F8F-1 are as follows:

Crew	one
Length	27 ft 8 in
Height	12 ft 2 in
Span:	
open	35 ft 6 in
folded	23 ft 9 in
Wing area	244 sq ft
Weights:	
empty	7,323 lbs
combat	9,672 lbs
Range	217 nautical miles (combat)
Engine	one Pratt & Whitney 2100 hp R-2800-34W
Ordnance:	
bombs	2,000 lbs
guns	four .50 calibre forward firing fixed in wings

F8F-1B:
The F8F-1 with four 20 mm guns replacing the .50 calibers.

F8F-1N:
The F8F-1 equipped for night fighting.

F8F-2:
F8F-1 but powered by higher rated engine (Pratt & Whitney R2800-30W) and the 20 mm gun installation.

F8F-2N:
F8F-2 equipped for night fighting.

F8F-2P:
F8F-2 equipped for photographic reconnaissance.

An XF8F-1 Bearcat.

Other Designations

F8F-1D and F8F-2D:
F8F-1 and F8F-2 equipped for use as a drone control plane.

F3M-1:
Planned designation for F8Fs built by General Motors. The contract ordering these aircraft was canceled at the end of World War II, and the aircraft were never delivered.

Bureau Numbers

F8F-1	90437-90459
XF8F-1	90460-90461
F8F-1	94752-95048
XF8F-2	95049
F8F-1	95050-95329
XF8F-1	95330
F8F-1	95331-96751 (95499-96751 canceled)
F8F-1	100001-102000 (all canceled)
F8F-1	112529-114528 (all canceled)
F8F-1	121463-121522
F8F-2	121523-121792
F8F-1B	122087-122152
F8F-2	122614-122708

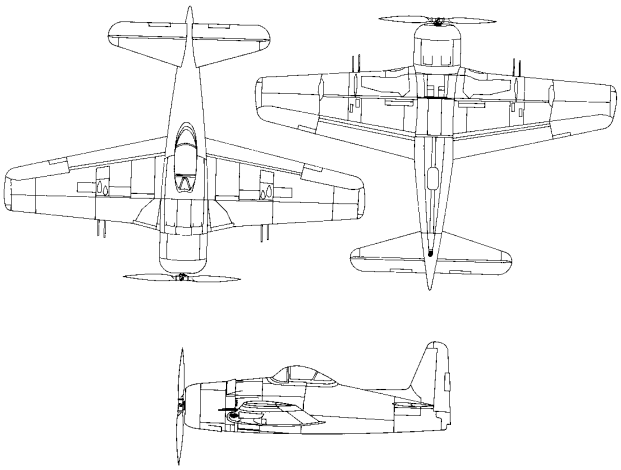

Line drawings for an F8F-2.

F8U (F-8) Crusader

In 1952, the Chance Vought Company submitted a design in response to a Navy request for proposals to build a supersonic daytime fighter aircraft The Navy awarded Vought the contract on 29 June 1953. The F8U first flew on 25 March 1955, the first delivery was in March 1957. By the time the last delivery was made in January 1965, 1,264 had been accepted for the Navy, the Marine Corps and foreign military use. The Crusader was last reported in squadron by VFP-206 on 1 April 1987 at NAF Washington, D.C. A single-seat, single-engine daytime fighter, the F8U was distinctive for its high wing with variable incidence to alter landing speed. The F8U was redesignated F-8 in 1962.

Model Designations Accepted from the Manufacturer (New Builds)

XF8U-1:
Experimental version of the F8U-1.

F8U-1 (F-8A):
Single place, swept-wing, carrier-based day fighter. Equipped to carry AIM-9 Sidewinder missiles.

F8U-1E (F-8B):
F-8A equipped with AN/APS-67 visual assist radar.

F8U-1P (RF-8A):
Photographic version of F-8A

F8U-1T (TF-8A):
Two-seat trainer

XF8U-2:
Experimental version of the F8U-2

F8U-2 (F-8C):
Improved version of F-8B with improved engine and fixed ventral fins. Characteristics of F8U-2 (F-8C) are as follows:

Crew	One
Power Plant	Pratt & Whitney J57-P-16
Combat Range	1,195-1,295 nautical miles
Weight	
Empty	16,483 lbs
Basic	17,673 lbs
Design	23,192 lbs
Maximum Combat	24,475 lbs
Maximum Takeoff	27,938 lbs (catapult)
Maximum Landing	22,000 lbs (arrested)
Dimensions	
Wing	
Area	375 sq ft
Span	35 ft 8 in

An F8U-1 Crusader prepares for take off from Hensley Field, Dallas, Texas.

Length	54 ft 3 in
Height	15 ft 9 in
Tread	9 ft 8 in
Ordnance	Four 20-mm aircraft guns front fuselage and 500 rounds. Thirty-two 2.75-inch rockets carried internally or in rocket pack, centerline fuselage or two AIM-9 missiles externally on pylon each side of fuselage.

F8U-2N (F-8D):

Similar to F-8C. Limited all-weather aircraft with AN/APQ-83 radar, autopilot, higher thrust engine and additional fuel capacity. Equipped to carry four Sidewinder missiles.

F8U-2NE (F-8E):

Similar to F-8D except equipped with AN/APQ-94 radar with larger antenna.

F8U-3:

Improved version of F8U with all-weather capabilities.

Other Designations

F8U-1D (DF-8A):

Configured as a high-speed control aircraft for Regulus I/II missile.

F8U-1KD (QF-8A):

Configured as a Regulus I missile high-speed trounce and control aircraft.

DF-8F:

Configured for remote control of QF-9F and QF-9G aircraft and BQM-34A, AQM-34B and AQM-34C drones.

RF-8G:

F-8A modernized for increased service life and reconnaissance capabilities.

F-8H:

F-8D modified to include external wing store capability, increased strength fuselage, lead-launch computer and other improvements.

F-8J:

F-8E with increased fuselage and wings, and other improvements.

F-8K:

Similar to F-8C but with structural changes to fuselage, wing and landing gear.

F-8L:

Similar to F-8B but with structural changes to fuselage, wing and landing gear.

F-8M:

Similar to F-8A but with structural changes to fuselage, wing and landing gear.

Bureau Numbers

XF8U-1	138899-138901 138901 (canceled)
F8U-1 (F-8A)	140444-140446, 141336-141362, 142408-142415, 143677-143821, 144427-144606 (144462-144606 canceled)
F8U-1E (F-8B)	145416-145545
F8U-1P (RF-8A)	141363, 144607-144625, 145604-145647, 146822-146905 (146902-146905 canceled), 147078-147084 (canceled)
F8U-1T (TF-8A)	145648-145659 (canceled)
XF8U-2	140447-140448
F8U-2 (F-8C)	145546-145603, 146906-147034
F8U-2N (F-8D)	147035-147077 (147073-147077 canceled), 147896-147925, 148627-148710
F8U-2NE (F-8E)	149134-149227, 150284-150355, 150654-150683, 150843-150932, 151732-151755
F8U-3	146340-146341, 147085-147100 (147088-147100 canceled)

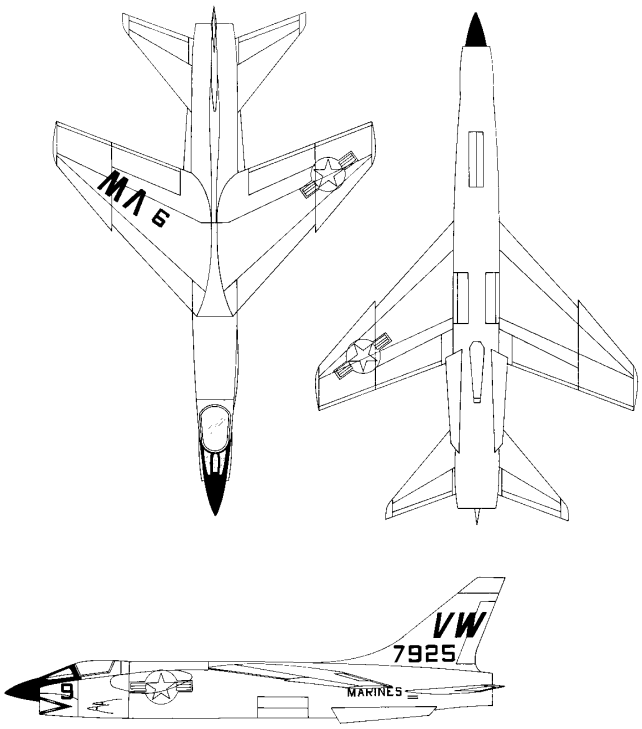

Line drawings for an F8U.

F9F (F-9) Panther and Cougar

The McDonnell Company of St. Louis built the Navy's first all jet aircraft and demonstrated that the jet engine was adaptable to naval aviation, but it was Grumman's F9F Panther that became the first Navy jet fighter to shoot down another jet fighter.

Grumman's departure from propeller driven fighters was accompanied by abandoning the tradition of naming the Company's fighters "Cats." However, the feline connection lived on with Panther and Cougar and eventually returned to original policy with the F-14 Tomcat.

Grumman received a Navy contract on 16 December 1946 to produce a jet powered, straight wing, carried based fighter. The aircraft Grumman proposed first flew on 21 November 1947 and was eventually designated and named the F9F-2 Panther. It was first delivered to Navy squadron in May 1949 and remained in service until October 1958. The Navy accepted a total of 1,388 Panthers with designations of F9F-2, F9F-3, F9F-4 and F9F-5.

The Panther's success led Grumman to design a swept wing derivative and propose it to the Navy. The new design retained the fuselage of the Panther but included a swept wing and tail. The Navy awarded Grumman a contract for this new aircraft on 2 March 1951. It made its first flight on 20 September and was named the Cougar but retained the F9F designation. The Cougar was first delivered to the Navy in November 1952 and remained in squadron until February 1960. The Navy accepted a total of 1,985 Cougars with the designations F9F-6, F9F-7 and F9F-8.

Models Accepted from the Manufacturers (New Builds)

Panther

XF9F-2:

Experimental version of the F9F-2. Straight wing. Powered by Rolls Royce Nene engine.

F9F-2:

Powered by Pratt & Whitney J42-P-8 engine.

XF9F-3:

Experimental version of the F9F-3. Powered by Allison J33A-8 engine.

F9F-3:

Powered by Allison J33-A-8 engine. These aircraft were converted to the F9F-2 configuration and powered by the J42 engine.

XF9F-4:

Experimental version of the F9F-4. Powered by the Allison J33-A-16 engine.

F9F-4:

Powered by the Allison J33-A-16 engine.

XF9F-5:

Experimental version of the F9F-5. Powered by the Pratt & Whitney J48-P-6 engine.

F9F-5:

Specifications for the F9F-5 are as follows:

Crew	one
Length	38 ft
Height	12 ft 3 in
Span:	
open	38 ft
folded	23 ft 5 in
Wing area	250 sq ft

An XF9F-2 Panther, November 1947.

Weights:	
empty	10,147 lbs
combat	15,359 lbs
Engine	Pratt and Whitney J48-P-6
Performance:	
Combat radius	420 nautical miles
Cruising speed	418 nautical mph
Ordnance:	
bomb	3,465 lbs total capacity
guns	four 20 mm guns in fuselage

F9F-5P:

F9F-5 equipped for photo reconnaissance.

Cougar

XF9F-6:

Experimental version. Swept wing and swept tail. Powered by Pratt & Whitney J48-P-6.

F9F-6 (Redesignated F-9F):

Powered by Pratt & Whitney J48-P-6.

F9F-6P:

F9F-6 equipped for photo reconnaissance.

F9F-7 (Redesignated F-9H):

Similar to F9F-6 but powered by Allison J33-A-16A engine.

F9F-8 (Redesignated F-9J):

The last single-seat version of the Cougar. It had additional fuel storage and an extended fuselage. Specifications for the F9F-8 (F-9J) are as follows:

Crew	one
Length	41 ft 6 in
Height	12 ft 3 in
Span:	
open	34 ft 6 in
folded	15 ft 8 in
Wing area	337 sq ft
Weights:	
empty	11,628 lbs
combat	17,125 lbs
Engine	Pratt & Whitney J48-P-8
Performance:	

An F9F-6 Cougar in flight, circa 1952.

Combat range	1,120 nautical miles
Cruising speed	about 480 nmph
Ordnance:	
bombs	4,000 lbs total capacity
guns	four 20 mm guns in fuselage

F9F-8P (Redesignated RF-9J):
F9F-8 equipped for photo reconnaissance.

YF9F-8T (Redesignated YTF-9J):
Prototype of a trainer configuration of the F9F-8.

F9F-8T (Redesignated TF-9J):
Two-seat trainer version of the F9F-8.

Other Designations

F9F-2KD:
F9F-2 modified and equipped as combination target drone and control aircraft for Regulus missile training program.

F9F-2P:
F9F-2 equipped for photo reconnaissance.

F9F-5KD (Redesignated DF-9E):
F9F-5 modified for use as a target drone or a control plane.

F9F-6D (Redesignated DF-9F):
F9F-6 modified and equipped to control either the F9F target drone or the KDA-1 target.

F9F-6K (Redesignated QF-9F):
F9F-6 modified as a target drone.

F9F-6K2 (Redesignated QF-9G):
F9F-6 modified as a Research Development and Evaluation target aircraft.

YF9F-8B (Redesignated YAF-9J):
Prototype of F9F-8B.

F9F-8B (Redesignated AF-9J):
F9F-8 equipped to perform attack missions. It had increased wing area, flap area, fuel capacity and a cambered leading edge. Specifications for the F9F-8B are as follows:

Crew	one
Length	41 ft 9 in
Height	12 ft 3 in
Span:	
open	34 ft 6 in
folded	15 ft 8 in
Wing area	337 sq ft
Weights:	
empty	11,866 lbs
combat	17,345 lbs
Engine	Pratt & Whitney J48-P-8A
Performance:	
Combat radius	295 nautical miles
Cruising speed	418 nautical mph
Maximum Weight	
catapult launch	24,763 lbs
Ordnance:	
bomb	two wing stations for fuel tanks, bombs, or air-to-air and air-to-surface missiles
guns	four 20 mm guns in fuselage

F9F-9:
Planned designation for an F9F-8 powered by a Wright J65-W-6 engine. This aircraft was never delivered to the Navy.

Bureau Numbers

XF9F-2	122475
XF9F-3	122476
XF9F-2	122477
F9F-2	122614-122708
F9F-3	123016-123083
XF9F-4	123084
XF9F-5	123085
F9F-3	123068-123087 (123087 canceled)
F9F-2	123397-123740 (123714-123740 canceled)
F9F-5	125080-125152
F9F-4	125153-125225
F9F-5	125226-125313
F9F-5P	125314-125321
F9F-5	125414-125443
F9F-5	125489-125499
F9F-5	125533-125648
F9F-5	125893-126256
F9F-6	126257-126264
F9F-5P	126265-126290
F9F-5	126627-126669
XF9F-6	126670-126672
F9F-2	127086-127215
F9F-6	127216-127470
F9F-5P	127471-127472
F9F-6P	127473-127492
F9F-6	128055-128294
F9F-6P	128295-128310
F9F-7	130752-130919
F9F-6	130920-131062
F9F-8	131063-131251
F9F-6P	131252-131255
F9F-8	134234-134244
F9F-6	134245-134433
F9F-6P	134446-134465
F9F-8	138823-138898

F9F-8	141030-141229
F9F-8	141648-141666
YF9F-8T	141667
F9F-8P	141668-141727
F9F-8T	142437-142532
F9F-8T	142945-143013
F9F-8	144271-144376
F9F-8P	144377-144426
F9F-8T	146342-146425
F9F-8T	147270-147429

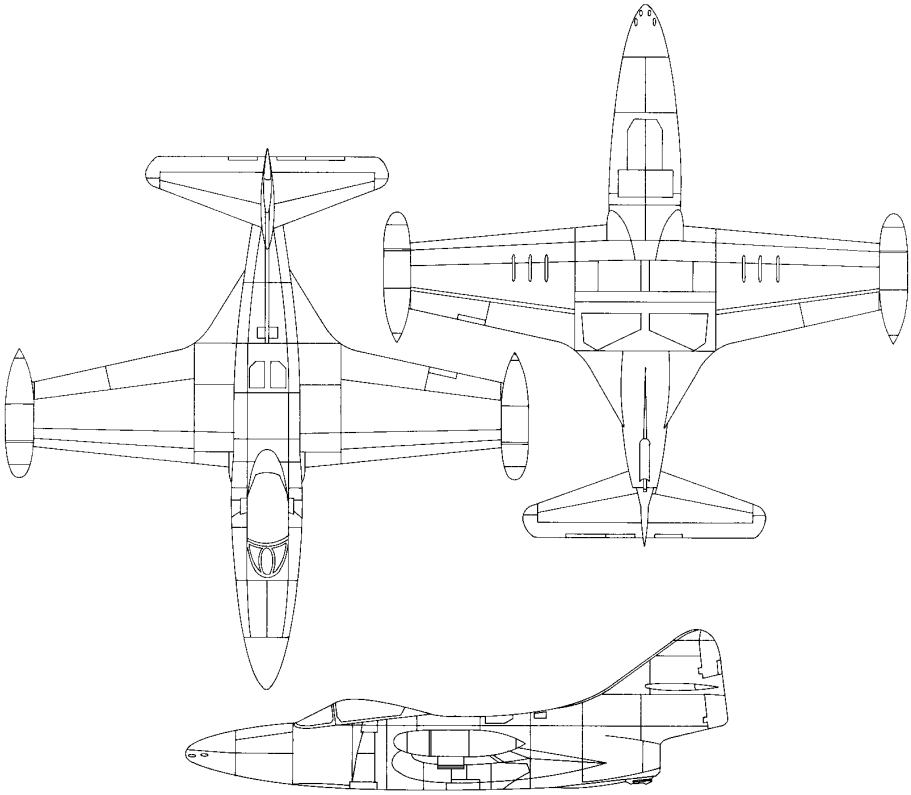

Line drawings for an F9F Panther.

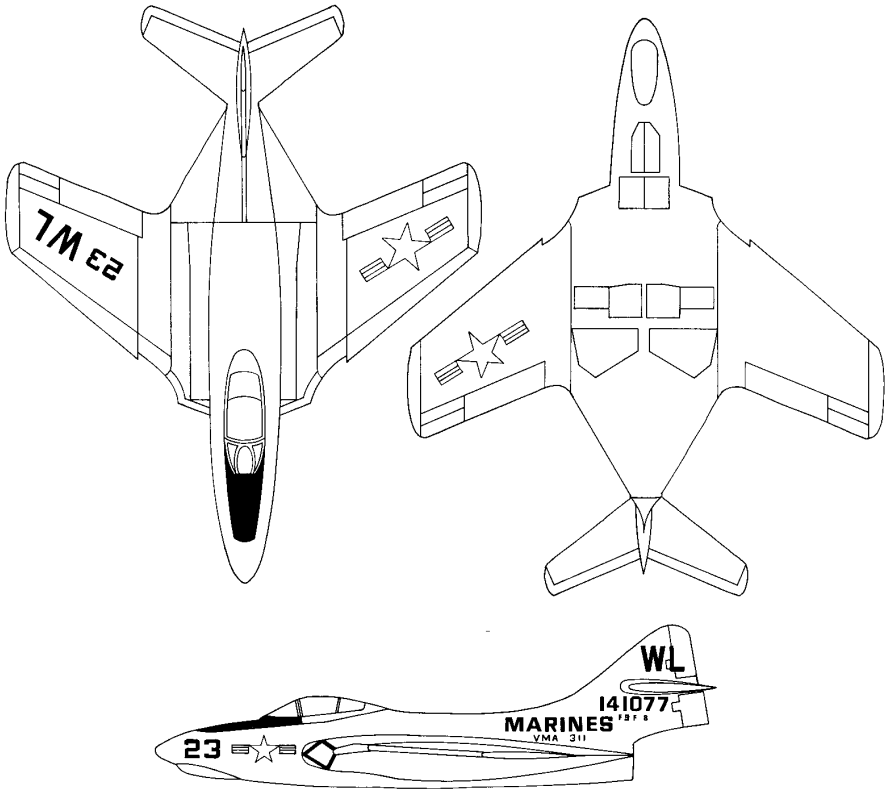

Line drawings for an F9F Cougar.

F/A-18 Hornet

On 6 June 1974, the Navy released to the aerospace industry a pre-solicitaion notice for the development of a new fighter and attack aircraft. Six manufacturers responded. On 28 August, the Chief of Naval Operations released the operational requirement for a strike fighter aircraft. The intent was to produce a fighter that would supplement the F-14 Tomcat and eventually replace both the F-4 Phantom II and the light attack A-7 Corsair II. This was to be done at the least expense possible, and Congress directed that the aircraft was to be a derivative of the YF-16/YF-17 then under evaluation by the Air Force.

On 2 May 1975, the Navy announced the selection of McDonnell Douglas' F-18 aircraft design. The General Electric Corporation was awarded a contract to develop the aircraft's engine. McDonnell Douglas was selected as the prime contractor. The Northrop Corporation was selected to build the after fuselage portion of the aircraft.

By the end of the 1980s, the F/A-18 Hornet, had proved to be a truly multi-mission tactical aircraft. It brought to the fleet a light-attack capability and a potent fighter complement to the F-14 in the outer air battle.

First flight	18 Nov 1978
First reported in squadron	VFA-125
Number delivered as of 1 Oct 1993	859

Model Designations Accepted from the Manufacturer (New Builds)

F/A-18A:
The original version. Single seat, capable of carrying bombs and air-to-air guided missiles.

F/A-18B:
Training version of the F/A-18A with combat capability. This designation replaced TF/A-18A.

F/A-18C:
Single seat with maximum level speed of more than Mach 1.8. The F/A-18C differs from F/A-18A in its ability to carry the AMRAAM missile, the infra-red Maverick missile, and the Airborne Self-Protection Jammer (ASPJ). There is also an enhanced avionics suite and night attack capability. Specifications for the F/A-18C are as follows:

Dimensions:	
Wing Span	37 ft 6 in
Length	56 ft
Height	15 ft 3 1/2 in
Weight:	
Empty	23,050 lbs
Maximum fuel weight, internal and external	17,592 lbs
Take off weight for fighter mission	36,710 lbs
Take off weight for attack mission	49,224 lbs

Armament:
nine external stations for missiles and bombs
M61 20 mm six-barrel gun in nose

Engines:
two General Electric F404-GE-400

An F/A-18A Hornet takes off from Lambert-St. Louis International Airport on its first flight, November 1978.

F/A-18D:
Two seat version of the F/A-18C with reconnaissance capability.

TF/A-18A:
Training version with combat capability. This designation was replaced with F/A-18B.

Modifications to Existing Airframes

F/A-18D (RC):
Tactical reconnaissance version.

Other Designations

CF-18:
Version for Canada.

EF-18A and EF-18B:
Versions for Spain.

AF-18A and ATF-18A:
Versions for Australia.

Bureau Numbers

F/A-18A	160775-160785
F/A-18A	161213-161216
F/A-18A	161248
F/A-18A	161250-161251
F/A-18A	161353
F/A-18A	161358-161359
F/A-18A	161361-161367

F/A-18A	161519-161528
F/A-18A	161702-161703
F/A-18A	161705-161706
F/A-18A	161708-161710
F/A-18A	161712-161713
F/A-18A	161715-161718
F/A-81A	161720-161722
F/A-18A	161725-161726
F/A-18A	161728-161732
F/A-18A	161734-161739
F/A-18A	161741-161745
F/A-18A	161747-161761
F/A-18A	161925-161931
F/A-18A	161933-161937
F/A-18A	161939-161942
F/A-18A	161944-161946
F/A-18A	161948-161987
F/A-18A	162394-162401
F/A-18A	162403-162407
F/A-18A	162409-162412
F/A-18A	162414-162418
F/A-18A	162420-162426
F/A-18A	162428-162477
F/A-18A	162826-162841
F/A-18A	162843-162849
F/A-18A	162851-162856
F/A-18A	162858-162863
F/A-18A	162865-162869
F/A-18A	162871-162884
F/A-18A	162886-162909
F/A-18A	163092-163103
F/A-18A	163105-163109
F/A-18A	163111-163114
F/A-18A	163116-163122
F/A-18A	163124-163175
TF/A-18A	161217
TF/A-18A	161249
TF/A-18A	161354-161357
TF/A-18A	161360
TF/A-18A	161704
TF/A-18A	161707
TF/A-18A	161711
TF/A-18A	161714
TF/A-18A	161719
TF/A-18A	161723
TF/A-18A	161727
TF/A-18A	161733
TF/A-18A	161740
TF/A-18A	161746
TF/A-18A	161924
TF/A-18A	161932
TF/A-18A	161938
TF/A-18A	161943
TF/A-18A	161947
TF/A-18A	162402
TF/A-18A	162408
TF/A-18A	162413
TF/A-18A	162419
TF/A-18A	162427
TF/A-18A	162842
TF/A-18A	162850
TF/A-18A	162857
TF/A-18A	162864
TF/A-18A	162870
TF/A-18A	162885
TF/A-18A	163104
TF/A-18A	163110
TF/A-18A	163115
TF/A-18A	163123
F/A-18C	163427-163433
F/A-18C	163435
F/A-18C	163437-163440
F/A-18C	163442-163444
F/A-18C	163446
F/A-18C	163448-163451
F/A-18C	163453
F/A-18C	163455-163456
F/A-18C	163458-163459
F/A-18C	163461-163463
F/A-18C	163465-163467
F/A-18C	163470-163478
F/A-18C	163480-163481
F/A-18C	163483-163485
F/A-18C	163487
F/A-18C	163489-163491
F/A-18C	163493-163499
F/A-18C	163502-163506
F/A-18C	163508-163509
F/A-18C	163699
F/A-18C	163701-163706
F/A-18C	163708-163719
F/A-18C	163721-163762
F/A-18C	163764-163770
F/A-18C	163772-163777
F/A-18C	163779-163782
F/A-18C	163985
F/A-18C	163987-163988
F/A-18C	163990
F/A-18C	163992-163993
F/A-18C	163995-163996
F/A-18C	163998-164000
F/A-18C	164002-164004
F/A-18C	164006
F/A-18C	164008
F/A-18C	164012-164013
F/A-18C	164015-164016
F/A-18C	164018
F/A-18C	164020-164021
F/A-18D	163434
F/A-18D	163436
F/A-18D	163441-163442
F/A-18D	163445
F/A-18D	163447
F/A-18D	163454

F/A-18D	163457
F/A-18D	163464
F/A-18D	163468
F/A-18D	163479
F/A-18D	163482
F/A-18D	163486
F/A-18D	163488
F/A-18D	163492
F/A-18D	163500-163501
F/A-18D	163507
F/A-18D	163510
F/A-18D	163700
F/A-18D	163707
F/A-18D	163720
F/A-18D	163763
F/A-18D	163771
F/A-18D	163778
F/A-18D	163986
F/A-18D	163989
F/A-18D	163991
F/A-18D	163994
F/A-18D	163997
F/A-18D	164005
F/A-18D	164009
F/A-18D	164011
F/A-18D	164019

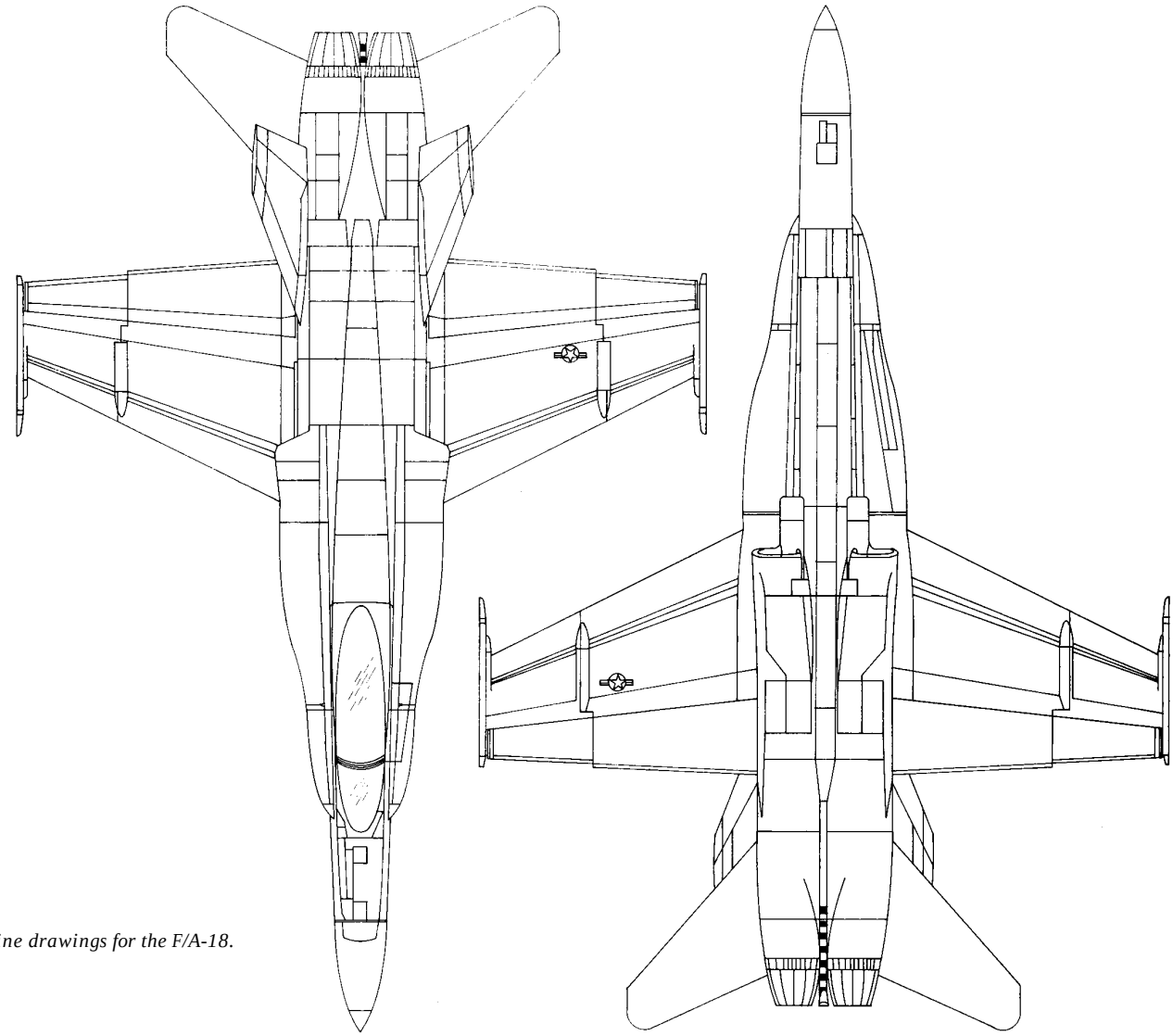

Line drawings for the F/A-18.

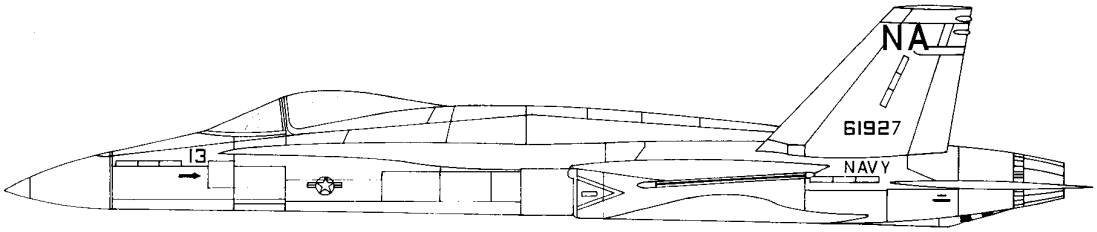

FH (FD) Phantom

In January 1943, the Navy's decision to build an all jet-powered, carrier-based aircraft led to a contract award to the McDonnell Aircraft Company, St. Louis, Missouri. McDonnell had never designed an aircraft for the Navy, and the Navy had never before sought a jet aircraft. Following the procedure of the day, the Navy assigned a manufacturer's letter to McDonnell for its incorporation into the aircraft's designation. At the time, all usable letters were in use, so the Navy—almost presciently-assigned McDonnell the letter D which was already used by Douglas. On 6 June 1947, the letter was later changed to H; the Phantom was first designated FD and later FH.

The aircraft first flew on 26 January 1945. VF-17A made the first acceptance on 23 July 1947. VMF-122 was the last squadron to report a Phantom on 1 July 1950. A total of 61 aircraft were accepted.

The XFD-1 Phantom in flight, later redesignated FH.

Model Designations Accepted from the Manufacturer (New Builds)

XFD-1:

Experimental version of the FD-1. The designation was never changed to XFH-1.

FD-1:

Production version of the FD-1. Basically the same as the XFD-1 but with some redesign of the vertical tail structure. Designation was later changed to FH-1.

Characteristics of XFD-1:

Crew	One
Power Plant	Two 1,560 lb Westinghouse J60 engines
Combat Range	475 nautical miles
Weight	
Gross	8,626 lbs
Empty	6,156 lbs
Dimensions	
Wing Span	42 ft
Length	37 ft 2 in
Height	13 ft 2 in
Ordnance:	None in experimental version.
	Four fixed .50 cal. guns in FD-1.

Bureau Numbers

XFD-1	48235-48236
FD-1	111749-111848 (111809-111848 canceled)

Line drawings for the FH.

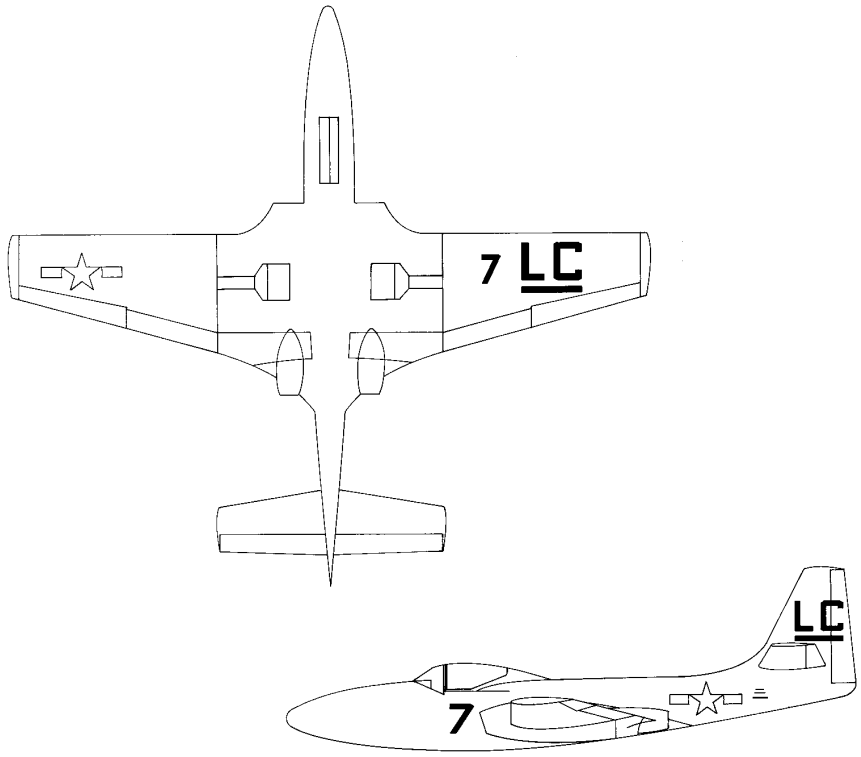

FJ-3/4 (F-1) Fury

North American's straight-wing Navy FJ-1 of the 1940s led to the swept wing F-86 Sabre; it seemed a logical development for the company to later produce a swept-wing, carrier-based fighter. It would be designated FJ-2 and would first fly on 27 December 1951. All FJ-2s were powered by a single General Electric J47-GE-2 engine with 6,000 pounds thrust; all were assigned to the Marine Corps. The later carrier-based variant was designated FJ-3 and was powered by a single Wright J65-W-4 engine with 7,800 pounds thrust; it first flew in 1953. The FJ-4 had a redesigned fuselage and wings with greater fuel capacity but the same engine as the FJ-3. The FJ-4 was used primarily by the Marine Corps. In 1962, the FJ-3 and FJ-4 were redesignated F-1C and F-1E, respectively. The last Fury was delivered in May 1958. The Fury was last reported in squadron on 30 September 1962.

An XFJ-4 Fury in flight, November 1954.

Model Designations Accepted from the Manufacturer (New Builds)

FJ-3 (F-1C):
Single-engine, swepwing, single-place, high-performance day fighter. Characteristics of FJ-3 (F-1C) are as follows:

Crew	One
Power Plant	7,800 pound Wright J65-W-4A
Combat Range	990 nautical miles
Weight	
Empty	12,815 lbs
Basic	13,790 lbs
Design	16,482 lbs
Combat	16,632 lbs
Maximum Takeoff	19,390 lbs (catapult)
Maximum Landing	15,000 lbs (arrested)
Dimensions	
Wing	
Area	288 sq ft
Span	37 ft 1 in
Length	38 ft 7 in
Height	13 ft 8 in
Tread	9 ft

Ordnance on FJ-3 beyond Bureau Number 136118:
Four 20 mm guns in forward fuselage with 646 rounds. Wing stations to carry: 5 inch rockets; 250, 500 and 1,000 lb bombs; 260 lb fragmentation bomb; two AIM-9 missiles

FJ-3M (MF-1C):
FJ-3 equipped to carry AIM-9 Sidewinder missile.

XFJ-4:
Experimental version of FJ-4.

FJ-4 (F-1E):
Production improvement of the FJ-3.

FJ-4B (AF-1E):
FJ-4 with provisions for attack missions.

Other Designations

FJ-3D (DF-1C):
FJ-3 modified for control of Regulus missile.

FJ-3D2 (DF-1D):
FJ-3 capable of controlling the F9F-6K and KDA-1.

FJ-4F:
FJ-4 with provision for rocket assist.

Bureau Numbers

FJ-3 (F-1C)	135774-136162, 139210-139278, 139324-139423 (canceled)
FJ-3M (MF-1C)	141364-141443
XFJ-4	139279-139280
FJ-4 (F-1E)	139281-139323, 139424-139530
FJ-4B (AF-1E)	139531-139555, 141444-141489, 143493-143676 (143644-143676 canceled)

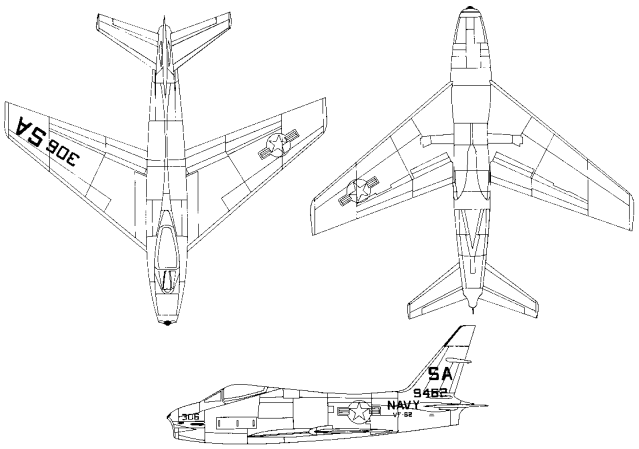

Line drawings for the FJ Fury.

FM Wildcat

Built by the Eastern Aircraft Division of General Motors to Grumman's F4F Wildcat design, an FM first flew in August 1942. Eastern was made a second production source for this aircraft to allow Grumman to concentrate on the Wildcat's successor, the F6F Hellcat. In all, Eastern delivered 5,927 FMs to the Navy, including those for use by the Allies. An FM was last reported in squadron in November 1945.

Model Designations Accepted from the Manufacturer (New Builds)

FM-1:

Based on F4F-4, the FM-1 had a gross weight 75 pounds greater than that of the F4F-4. Characteristics of the FM-1 are as follows:

Crew	One
Power Plant	Pratt & Whitney R-1830-86 with 1,200 hp
Combat Radius	324 nautical miles
Weight	
Gross	8,837 lbs
Empty	5,895 lbs
Dimensions	
Wing	
Area	260 sq ft
Span	38 ft
Length	28 ft 10 in
Height	12 ft 2 in
Ordnance:	Four forward-firing .50 cal. guns
with	1,720 rounds.

An FM-2 Wildcat in flight, April 1944.

FM-2:

Based on a Grumman prototype designated XF4F-8, the FM-2 was powered by one Wright R-1820-56 engine of 1,350 hp and had a tail fin slightly taller than the FM-1's.

Other Designations:

XFM-2:

F4F-4 converted to facilitate production engineering of the FM-2.

FM-2P:

FM-2 equipped for reconnaissance.

Bureau Numbers

FM-1	14992-15951, 46738-46837
FM-2	15952-16791, 46838-47437, 55050-55649, 56684-57083, 73499-75158, 86297-87719 (86974-87719 canceled)

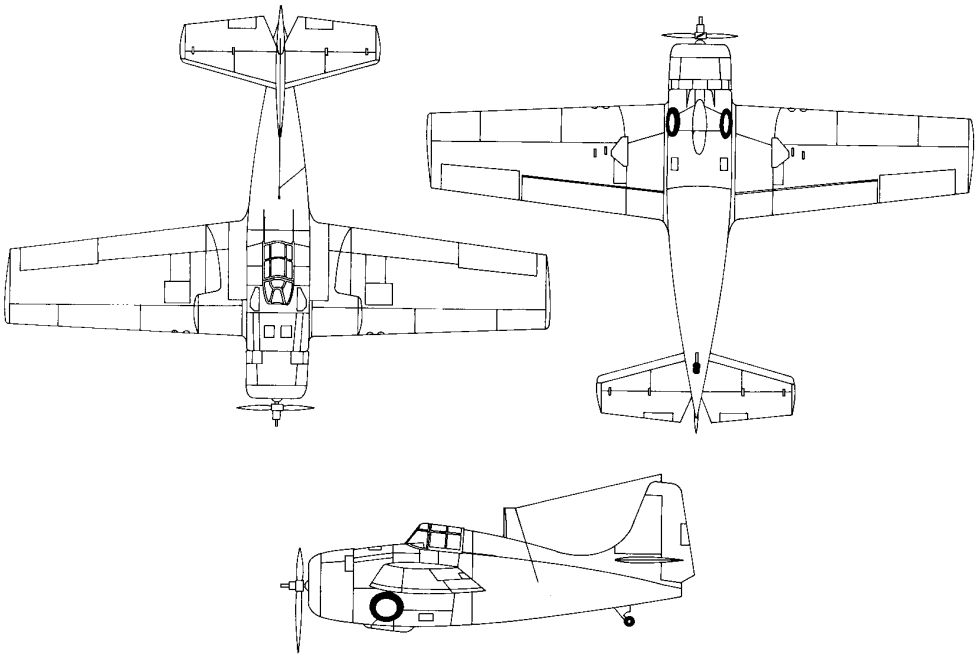

Line drawings for an FM-2.

OV-10 Bronco

In October 1964, the Navy awarded a contract to North American to design a Light Armed Reconnaissance Aircraft (LARA) for the Marine Corps. Two years later, the LARA had developed into a tri-service program to provide a Counter-Insurgency (COIN) aircraft for the United States Armed Forces. HML-267 accepted the first article for the Marine Corps in February 1968. A total of 356 Broncos were accepted for Navy and Marine Corps use and for foreign military sales.

Model Designations Accepted from the Manufacturer (New Builds)

YOV-10A:

Prototype of the Bronco.

A full-scale mock-up of the OV-10 at the North American factor, circa mid-1960s.

OV-10A:

Production version of the Bronco. It was the only variant accepted for the Marine Corps. Characteristics of the OV-10A are as follows:

Crew	Two
Power Plant	Two 715-shp Garrett Air Research turboprops
Combat Range	789 nautical miles
Weight	
Maximum Takeoff	14,444 lbs
Empty	6,921 lbs
Dimensions	
Wing Span	40 ft 4 in
Wing Area	291 sq ft
Length	41 ft 6 in
Height	15 ft 1 in
Ordnance:	Four 7.62-mm guns, AIM-9 Sidewinders, rockets, bombs, gun pods.

Other Designations

OV-10D:

The result of an improvement program to produce what was referred to as the OV-10D Plus configuration. Begun in 1988, the -10D included the Service Life Extension Program, which comprised a wide range of engineering change proposals to update the aircraft and improve its performance. Some structural changes were made and avionics equipment was added. The aircraft was night vision capable.

Bureau Numbers

YOV-10A	152879-152885
OV-10A	155390-155503, 613552, 674652, 674623, 683809, 683799, 683796, 674626

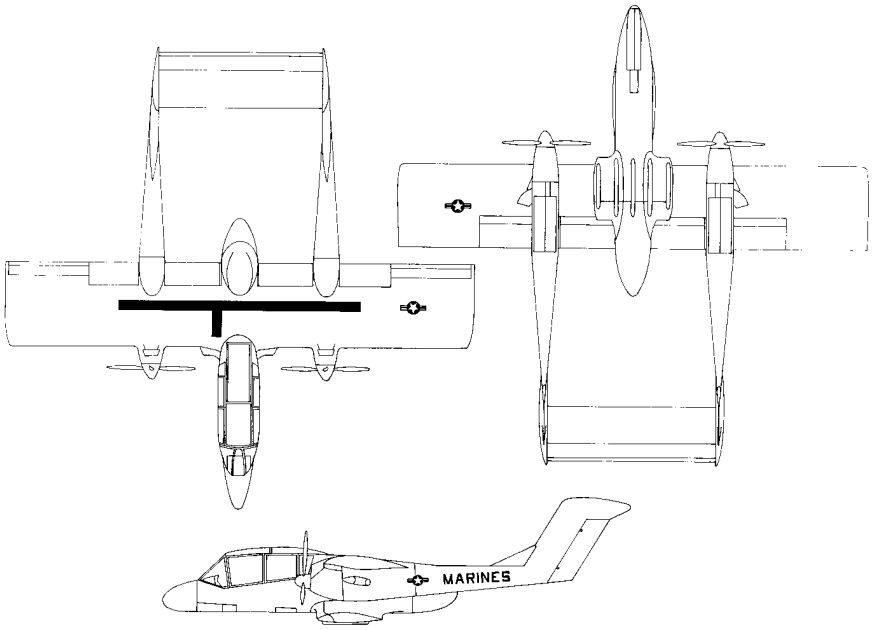

Line drawings for the OV-10A.

PB4Y Liberator

(and its other names and designations)

By 1942, the Royal Air Force (RAF) was using Consolidated's U.S. Army land-based B-24 Liberator on long-range patrol against German submarines and surface vessels. The RAF's success in this deployment was sufficient to induce the U.S. Navy to acquire a quantity of the type. The B-24D entered Navy inventory as the PB4Y-1 Liberator when VP-51 accepted the first articles in October 1942. The B-24 remained in U.S. Navy service until VJ-62 last reported a P4Y-1P in squadron. At the time of the redesignation in 1962, the only variant of the aircraft remaining in Navy use was the target drone P4Y-2K, which was redesignated QP-4B. A total of 977 -1s and 739 -2s were procured.

Records show that at sometime the PB4Y-1s and PB4Y-2s were both called Liberator, although it was probably the intention always to refer to all -1s as Liberator and all -2s as Privateer. The P4Y-2s, which were PB4Y-2s redesignated, were all called Privateer. The Coast Guard flew some Privateers under the designation P4Y-2G. Other Navy acquisitions included the transport version designated RY-1, RY-2 and RY-3—all of which were called Liberator Express.

Model Designations Accepted from the Manufacturer (New Builds)

PB4Y-1:

Land-based bomber used mainly for ASW. Dual tail fin. Powered by four Pratt & Whitney R-1830-43s.

A naval reserve P4Y-2 from NAS Glenview at Gibraltar.

PB4Y-2:

Single tail fin, longer fuselage than the -1, additional armament and powered by four Pratt & Whitney R-1830-94s. Redesignated P4Y-2. Characteristics of the PB4Y-2 are as follows:

Crew	11
Power Plant	Four Pratt & Whitney R-1830-43.
Combat Range	1,920 nautical miles
Weight	
Maximum Takeoff	64,000 lbs
Empty	37,464 lbs
Dimensions	
Wing Span	110 ft
Wing Area	1,048 sq ft
Length	74 ft 9 in
Height	29 ft 2 in
Ordnance:	Twelve .50 cal. guns: 2 in the nose turret, 2 in the tail turret, 4 in the waist, 2 in the forward deck and 2 in the after deck. Total of 6,800 rounds. Provisions for four 2,000 pound or eight 1,000 pound or twelve 500 pound bombs; or twelve 324 pound depth charges; or four 2,000 pound or eight 1,000 pound mines.

PB4Y-2B:

PB4Y-2 modified to launch and control the ASM-N-2 Bat glide bomb. Redesignated P4Y-2B.

PB4Y-2M:

Demilitarized version of the PB4Y-2 used for weather reconnaissance.

PB4Y-2S:

Antisubmarine version of the PB4Y-2. Redesignated P4Y-2S.

Other Designations

PB4Y-1P:

PB4Y-1 equipped for photoreconnaissance. Redesignated P4Y-1P.

PB4Y-1Z:

PB4Y-1 converted for administrative purposes.

XPB4Y-2:

Experimental version of the PB4Y-2.

PB4Y-2C:

PB4Y-2 with an Emerson turret in lieu of the ERCO turret in the bow.

P4Y-2G:

P4Y-2 flown by the U.S. Coast Guard.

P4Y-2S2:

Improved version of the P4Y-2S.

P4Y-2K:
Equipped as a target drone.

Bureau Numbers

PB4Y-1	31936-32085, 32087-32094, 32097-32335, 38773-38979, 46725-46737, 63915-63991 (63960-63991 canceled), 65287-65396, 90132-90271, 90462-90271
XPB4Y-2	32086, 32095-32096
PB4Y-2	59350-59924 (59554 canceled), 59926, 59929-59937, 59939-59944, 59946-59948, 59950-59954, 59970-60009, 66245-66394, (66325-66394 canceled), 66795-67054 (all canceled), 76839-77138 (all canceled)
PB4Y-2B	59925
PB4Y-2S	59927
PB4Y-2M	59928, 59938, 59945, 59949, 59955-59969

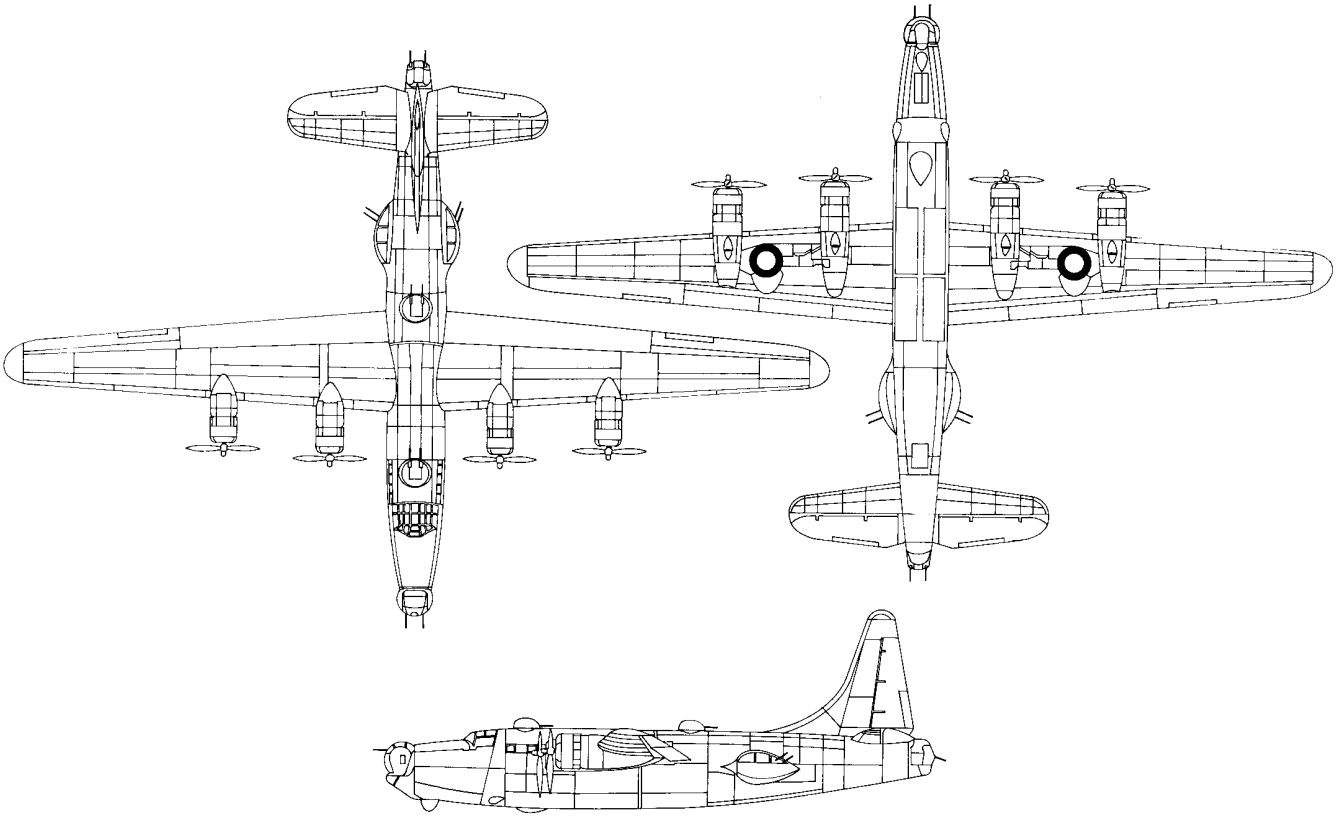

Line drawings for the PB4Y-2.

SB2A Buccaneer

In 1934, the Brewster Aeronautical Corporation designed the XSBA-1 for the Navy and built one article. On 4 April 1939, the Navy awarded Brewster a contract for another Scout Bomber. This contract led to the SB2A Buccaneer. The Navy accepted a total of 771 SB2As of which 468 were for foreign military use. The Navy eventually used some of these aircraft for training, but if any of the 771 SB2As ever saw combat, no record of it has yet been found.

An SB2A Buccaneer.

First contract	4 April 1939
First flight	17 June 1941
First reported in squadron	31 January 1943, VMF(N)-531
Last delivery	February 1944
Last reported in squadron	30 Nov 1943 by VMF(N)-532
Number accepted	771

SB2A-1:

Specifications for the SB2A-1 are as follows:

Weights:	
Empty	9,491 lbs
Gross	14,565 lbs
Ordnance:	
Two .30 cal. wing guns	
Two .50 cal. nose (propeller synchroized) guns	
Two .30 cal. flexible guns	
Two 500 or one 1,000 pound bomb	
Wing area	379 sq ft
Wing span	47 ft
Height	15 ft 9 in
Length	38 ft 10 in
Max range	1,700 statute miles
Power plant	One 1,700 hp Wright R-2600

Bureau Numbers

XSB2A-1	1632
XSB2A-1	01005
SB2A-2	00803-00882
SB2A-3	00883-00942
SB2A-4	29214-29375

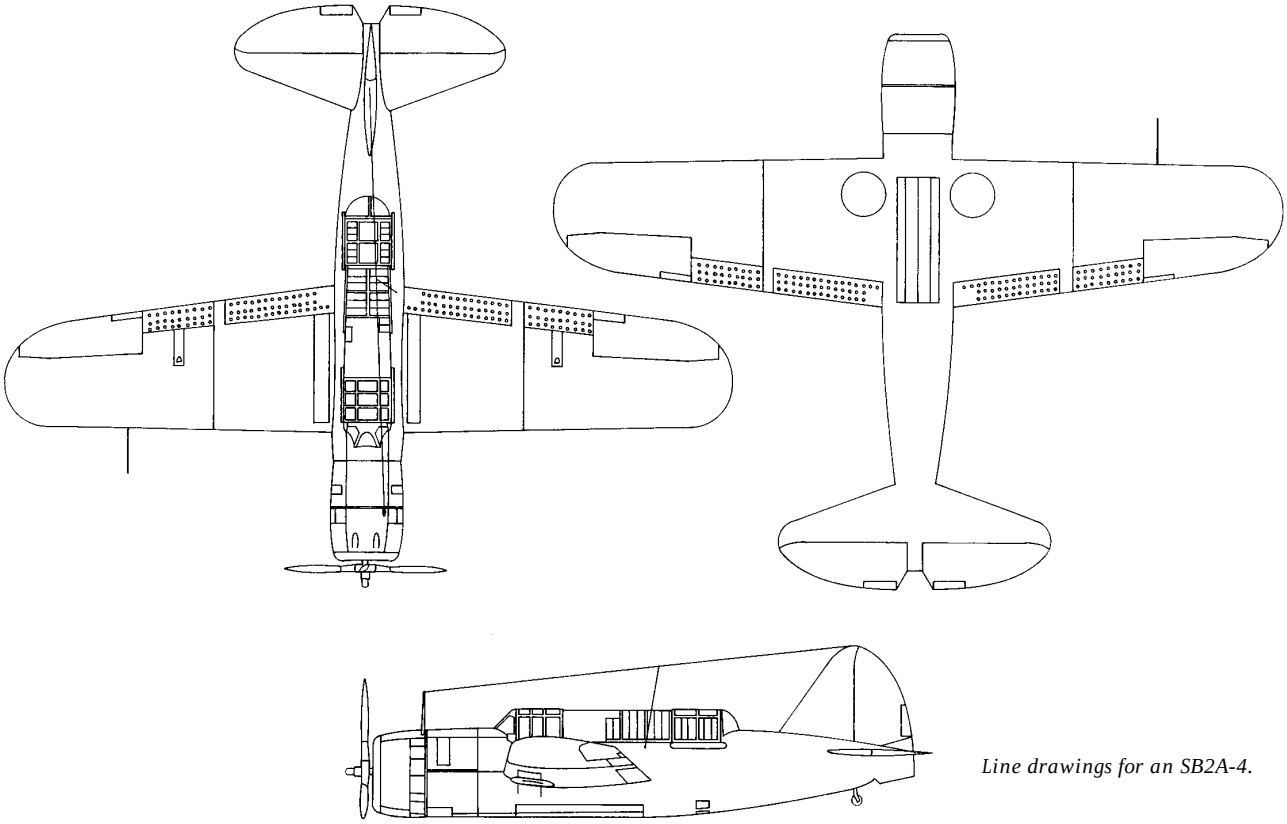

Line drawings for an SB2A-4.

SB2C/SBW/SBF Helldiver

Curtiss added to its list of Navy combat aircraft in December 1942 upon delivering the service's first SB2C Helldiver to VS-9. Powered by the Wright R-2600 Cyclone engine, the SB2C monoplane scout bomber was ordered by the Navy in 1939 as a replacement for the SBD Dauntless. It was Curtiss's first monoplane attack aircraft and would eventually be built in 19 designations by three manufacturers. By the time the Navy accepted the last Helldiver in October 1945, production had reached 6,650. The Helldiver, in its different models, carried both fixed wing guns and flexible guns ranging from .30 to .50 calibre and 20 mm. Bomb capability was based on two external wing racks and an internal bomb bay equipped with displacement gear, or crutch, to release a single bomb. Some models could carry 5 inch rockets.

First contract	15 May 1939
First flight	18 Dec 1940
First reported in squadron	15 Dec 1942
Last delivery	Oct 1945
Number accepted	6,650
Last reported in squadron	1 Jun 1949

An XSB2C-1 Helldiver, December 1940.

Model Designations Accepted from Manufacturer (New Builds)

XSB2C-2, XSB2C-5, XSB2C-6:
Experimental models.

SB2C-1:
The first production model of the Helldiver. The aircraft carried four .50 calibre fixed guns in the wings and twin .30 calibre guns in flexible mount. The SB2C-1 was tested for its torpedo launching capability but never tried to launch any in combat. Was powered by the R-2600-8 engine.

SB2C-1A:
A designation used only for procurement of SB2C-1s for the U.S. Army which designated them A-25A with the intention of using them for dive-bombers. There were some structural modifications from the Navy SB2C-1. The Army never used the land-based A-25A in combat, and neither did the Navy and Marine Corps, all of which eventually used the SB2C-1/A-25A for training.

SB2C-1C:
Carried two 20 mm fixed guns in the wings and twin .30 calibre guns on a flexible mount. It was powered by the R-2600-8 engine.

SB2C-3:
Carried two 20 mm fixed guns in the wings and twin .30 calibres on a flexible mount. It was powered by R-2600-20 engine.

SB2C-4:
SB3C-3 with perforated flaps.

SB2C-4E:
SB2C-4 with special radar.

SB2C-5:
Same as SB2C-4 but with improved pilot's cockpit, two 50 gallon wing tanks, and a strengthened fuselage. Specifications for the SB2C-5 are as follows:

Weights:
- Empty 10,589 lbs
- Combat 14,415 lbs

Ordnance:
- Two 20 mm wing guns
- Two .30 cal. guns on aft flexible mount
- Eight 5 inch HVAR rockets
- Internal bomb bay that could accommodate up to 1,000 lbs, and two external wing racks that could handle up to 1,000 lbs each.

Wing area 422 sq ft
Wing span 49 ft 9 in

Height	14 ft 9 in
Length	36 ft 8 in
Power plant	Wright R-2600-20 cyclone

SBW-1:
SB2C-1 built by Canadian Car and Foundry Co.

SBW-1B:
Built for the United Kingdom.

SBW-3:
Similar to SB2C-3.

SBW-4:
Same as SB2C-4.

SBW-4E:
Equipped with radar.

SBW-5:
Same as SB2C-5.

SBF-1:
SB2C-1 built by Fairchild of Canada.

SBF-3:
Same as SB2C-3.

SBF-4E:
Same as SB2C-4E.

Other Designations

SB2C-1E, SB2C-3E, and SB2C-5E:
Equipped with radar.

SB2C-3P:
Equipped for photographic reconnaissance.

SB2C-5D:
Equipped for use as a control plane.

Bureau Numbers

XSB2C-1	1758
SB2C-1	00001-00004, 00006-00200
SB2C-1A	75218-75588, 76780-76818
SB2C-1C	00201-00370, 01008-01215, (01209-01215 canceled), 18192-18307, 18309-18598
XSB2C-2	00005
SB2C-3	18622-19710
SB2C-3/3E	18599-18619
SB2C-4/4E	19711-21191, 64993-65285, 82858-83126
XSB2C-5	18308, 65286, 83127
SB2C-5	83128-83751, 89120-90019 (89466-90019 canceled)
XSB2C-6	18620-18621
SBF-1	31636-31685
SBF-3	31686-31835
SBF-4E	31836-31935
SBW-1	21192-21231, 60010-60035
SBW-3	21233-21645
SBW-4E	21646-21741, 60036-60209
SBW-5	60210-60459 (60210, 60296-60459 canceled), 21232 (21232 canceled)

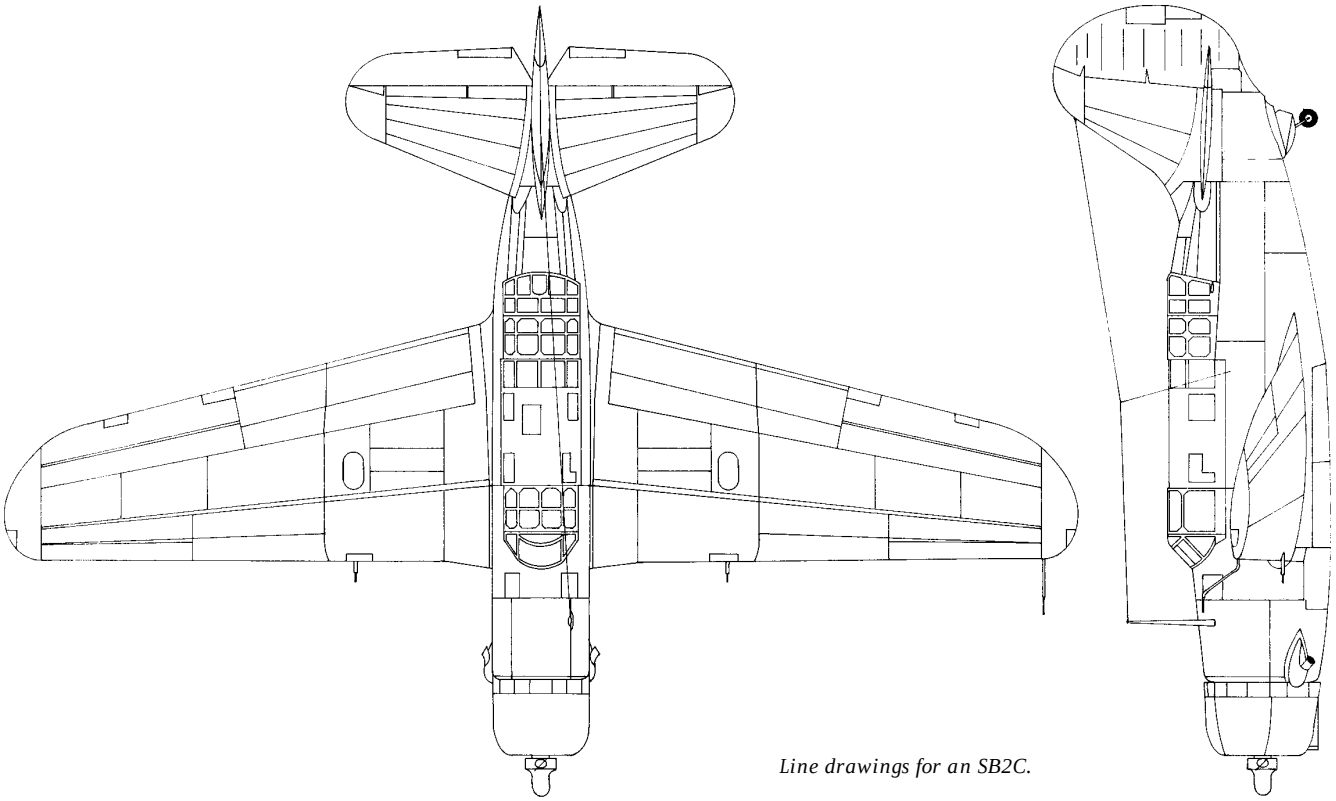

Line drawings for an SB2C.

SB2U Vindicator

Among the first monoplanes to fly from a carrier, the SB2U Vindicator was produced by Vought to provide the Navy with a new dive bomber incorporating the latest aerodynamic developments. The aft portions of the SB2U-1's wings were partially covered with fabric, and the aircraft had some shortcomings such as an uncomfortable cockpit and poor lateral control, but it would prove to be reliable and effective in performing its intended mission.

First contract	11 October 1934
First flight	4 January 1936
First reported in squadron	20 December 1937 by VB-3
Last delivery	July 1941
Last reported in squadron	SB2U-1 by VB-9 on 28 February 1943
Number accepted	170

Models Accepted from the Manufacturer (New Builds)

XSB2U-1:
Experimental version.

XSB2U-3:
Experimental version.

SB2U-1:
Powered by the Pratt & Whitney 850 hp R-1535-96 engine. Two .30 calibre wing guns, a .30 calibre aft firing gun, carried a 1,000 lb bomb.

SB2U-2:
Same as SB2U-1 but with a higher gross weight.

SB2U-3:
Built for the Marine Corps, the SB2U-3 could operate from a carrier. It had two .50 calibre guns mounted in the cowling and was powered by a Pratt & Whitney R-1535-2 engine. Specifications for the SB2U-3 seaplane are as follows:

An XSB2U-1 Vindicator, May 1936.

Weights:	
Empty	6,153 lbs
Gross	8,900 lbs
Ordnance:	
Two .30 cal. wing guns	
One .30 cal. flexible gun	
One 500 or 1,000 lb bomb	
Wing area	305 sq ft
Wing span	41 ft 10 in
Height	16 ft 6 in
Length	37 ft
Power plant	Pratt & Whitney 825 hp R-1535
Max range	1,240 statute miles

Bureau Numbers

XSB2U-1	9725
SB2U-1	0726-0778
XSB2U-3	0779
SB2U-2	1326-1383
SB2U-3	2044-2100

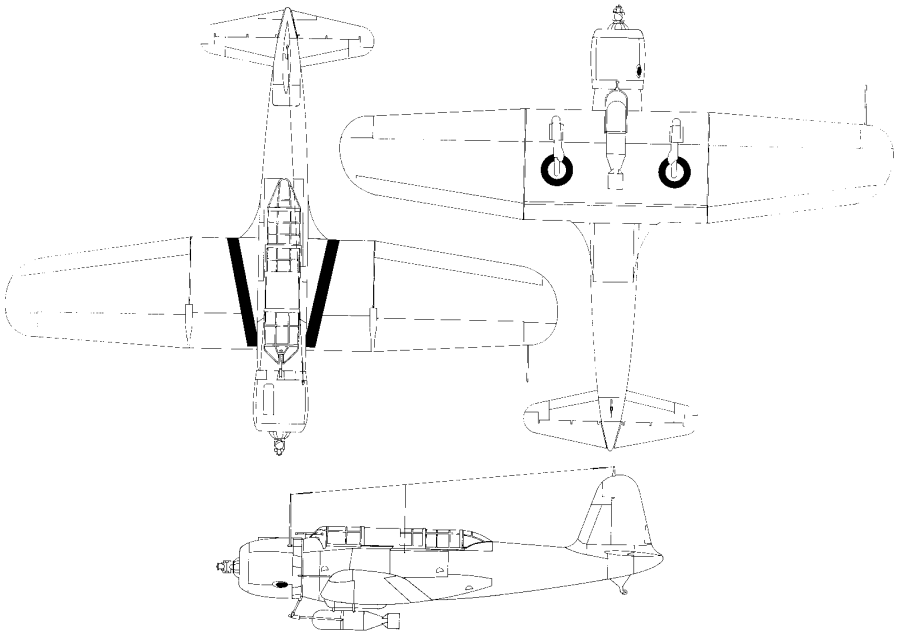

Line drawings for an SB2U.

SBC

A Bureau of Aeronautics contract of 30 June 1932 to the Curtiss Company resulted in the prototype of a fighter aircraft designated XF12C. But before the aircraft was assigned to any fleet squadron, or even put into production, its mission was changed to scout bomber and its designation became SBC-1. Along the way, what had begun life as a monoplane became the last biplane to enter Navy service.

First contract	30 June 1932
First flight	14 June 1934
First reported in squadron	17 July 1937 by VS-5
Last delivery	April 1941
Last reported in squadron	1 June 1943 by VMSB-151 and VC-4
Number accepted	258

Models Accepted from the Manufacturer (New Builds)

XSBC-3:
Experimental article.

XSBC-4:
Experimental article.

SBC-3:
Two crew scout bomber powered by Pratt & Whitney R-1535-94.

SBC-4:
Two crew scout bomber powered by Pratt & Whitney R-1820-94.

Specifications for the SBC-4 are as follows:

Weight:	
Empty	4,841 lbs
Gross	7,632 lbs
Dimensions:	
Wing span	34 ft
Length	27 ft 7 in
Ordnance:	
Guns	one forward firing .30 cal. and one flexible .30 cal. gun in rear
Maximum bomb capacity	1,000 lbs

An XSBC-3 in flight, April 1936.

Bureau Numbers

XSBC-3	9225
SBC-3	0507-0589 (0582 modified to XSBC-4)
SBC-4	1268-1325
SBC-4	1474-1504
SBC-4	1809-1843
SBC-4	4199-4248

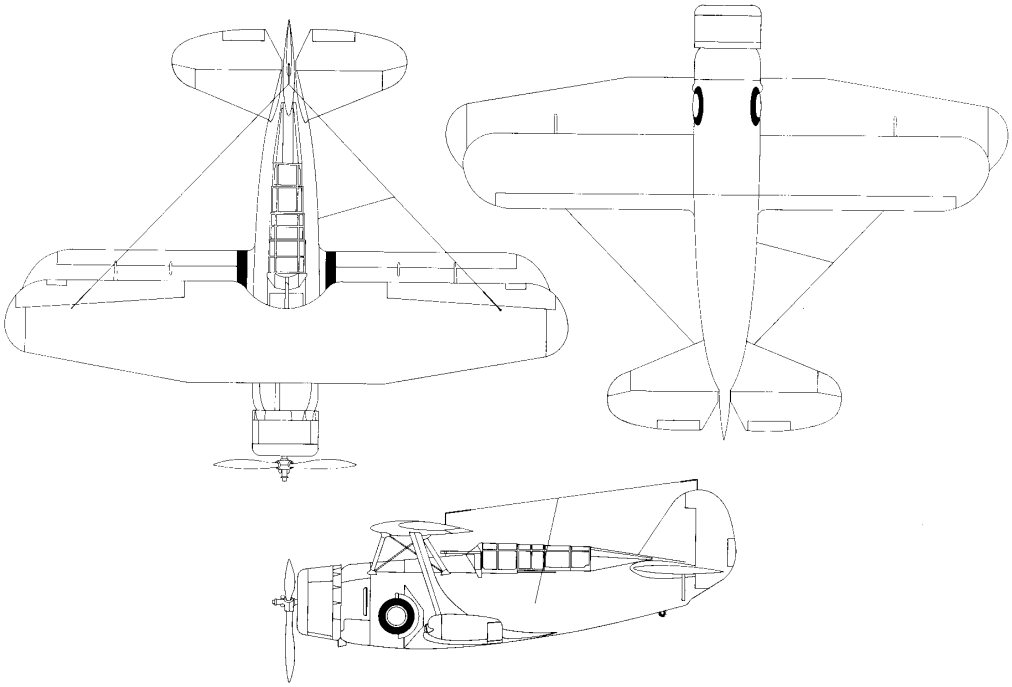

Line drawings for an SBC-3.

SBD Dauntless

Begun by the Northrop Company as the BL-1 and later redesignated BT-2, this aircraft's manufacturer was incorporated into the Douglas Company before the plane was ready for delivery to the Navy. For this reason, it arrived in squadron with the Douglas D in its designation. One of the Navy's most successful combat aircraft, the Dauntless was an indispensable part of the fleet's striking power throughout the Second World War.

Douglas built the aircraft under the designation SBD. The Navy accepted 5,321 SBDs, of which 338 were for Foreign Military Sales. The Navy also accepted 55 BTs from Northrop. The SBD-5 was the most numerous of all the models.

Of all the models accepted from the manufacturer, the differences were in such areas as range, dimensions and engines. For example the SBD-1 had a maximum bombing range of about 860 miles and the SBD-5's was around 1,100. All models were powered by the Wright R-1820. The SBD-1 and the SBD-2 used the R-1820-32; the SBD-3 and the SBD-4 used the R-1820-52; and the SBD-5 used the R-1820-50. The wingspan of 41 feet 6 inches was the same in all models, but the length increased from 32 feet 2 inches in the SBD-1 to 33 feet in the SBD-5.

First contract	11 Nov 1934
First flight	Estimated Aug 1935
First reported in squadron	11 Apr 1938 by VB-5
Last delivery	Aug 1944
Last reported in squadron	SBD-6 on 30 Sep 1945
Number accepted	5,321

An SBD-3 Dauntless in flight, circa 1941.

Models Accepted from the Manufacturer (New Builds)

SBD-1	SBD-2	SBD-3
SBD-3A	SBD-4	SBD-4A
SBD-5A	XSBD-6	SBD-6
XBT-1	XBT-2	BT-1

SBD-5:

Specifications for the SBD-5 are as follows:

Weight:	
Gross	10,403 lbs
Empty	6,533 lbs
Power Plant	Wright R-1820-60
Dimensions:	
Wing area	325 sq ft
Wing span	41 ft 6 & 5/16 in
Length	33 ft & 1/8 in
Height	13 ft 11 in
Ordnance:	
Guns	two fixed .50 cal. for pilot two free .30 cal. for gunner
Maximum bomb capacity	1,600 lbs

Bureau Numbers

SBD-1	1596-1631
SBD-1	1735-1755
SBD-2	2102-2188
SBD-3	4518-4691
SBD-3	03185-03384
SBD-3	06492-06701
SBD-4	06702-06991
SBD-5A	09693-09752
SBD-4	10317-10806
SBD-5	10807-11066
SBD-5	28059-28829
XSBD-6	28830
SBD-5	28831-29213
SBD-5	35922-35949
SBD-6	35950
SBD-5	35951-36421
SBD-5	36433-36932
SBD-5	54050-54599
SBD-6	54600-55049

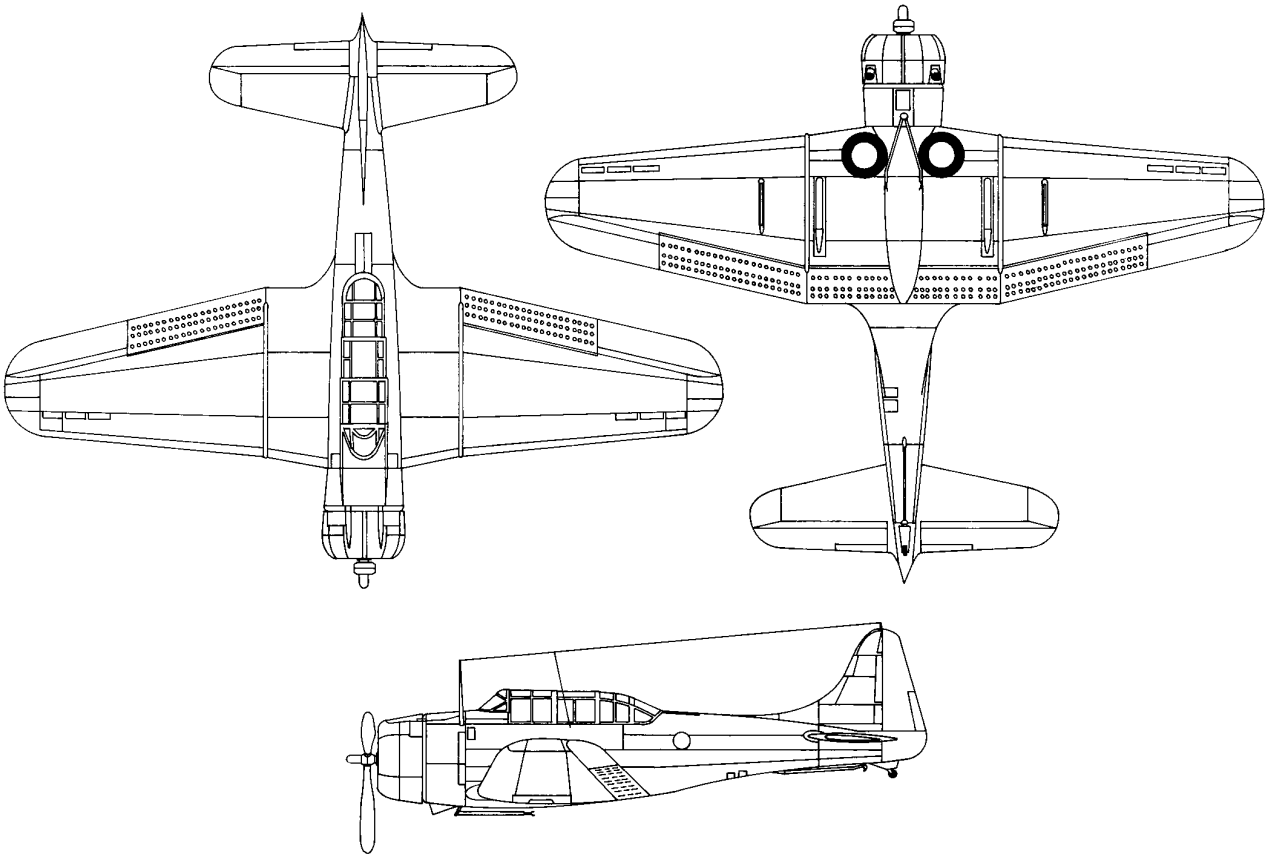

Line drawings of an SBD.

T3J (T-39) Sabreliner

In July 1961, the Navy ordered ten of North American's Model NA-277 to train radar operators. In that order the aircraft was designated T3J-1, but by the time the first one was delivered in 1962, the designation had been changed to T-39D. A total of 52 aircraft were accepted. Characteristics of the T-39 are as follows:

Crew	Pilot and a copilot as the main student. Provision in aft cabin for an instructor. Two stand-by students and a navigator's station.
Power Plant	Two Pratt & Whitney 2,400-lb J60-P-3 axial turbojets.
Mission Range	1,100 nautical miles
Weight	
Maximum Takeoff	17,760 lbs
Empty	10,250 lbs
Dimensions	
Wing Span	44 ft 4 in
Wing Area	342 sq ft
Length	43 ft 8 in
Height	16 ft
Ordnance:	None

Bureau Numbers

T-39D	150542-150551, 151336-151347, (151344-151347 canceled), 150969-150992

A Training Squadron 10 (VT-10) T-39 Sabreliner in flight.

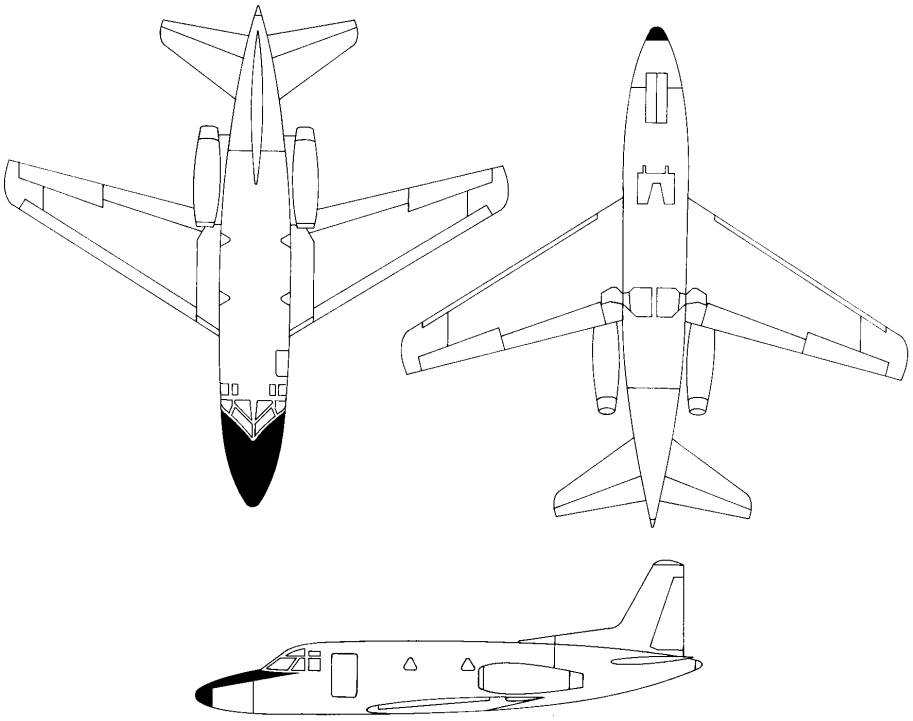

Line drawings for a T-39.

T2D/P2D

Beginning its life as a Bureau of Aeronautics design, this aircraft's prototype was built at the Naval Aircraft Factory and designated the XTN-1. A large twin engine aircraft, its design was the Bureau's response to a need for an improved torpedo bomber. At that time, Rear Admiral William Moffett was Chief of the Bureau of Aeronautics. Moffett championed the existence of the Aircraft Factory for its research and development capability, but he also recognized the need for a strong aviation industry in the United States and accordingly opposed large production runs at the Factory. In keeping with this attitude, BuAer gave the production contract for the XTN-1 to Douglas who produced the aircraft as the T2D.

Built to operate from land and carrier, the T2D-1 ran afoul of the Army who felt the Navy was encroaching upon its purview with a big land-based bomber. In response to complaints, the Navy had Douglas produce the rest of the T2Ds with twin floats and redesignated them P2D for patrol craft.

The aircraft made its first flight on 27 January 1927. It was first reported in squadron by VT-2 on 25 May 1927. The designation last reported in squadron was a P2D-1 by VP-3F on 28 February 1937. A total of thirty aircraft were accepted.

XT2D-1:

Specifications for the XT2D-1 are as follows:

Span	57 ft.
Height	14 ft 4 1/2 in
Length	44 ft 10 in
Width (wings folded)	26 ft
Full load	9,575 lbs
Useful load	3,715 lbs
Empty weight	5,860 lbs
Landing speed	55 mph

Bureau Numbers

XTN-1	A7027
T2D-1	A7051-A7053, A7587-A7595
P2D-1	A8644-A8661

A Douglas T2D-1.

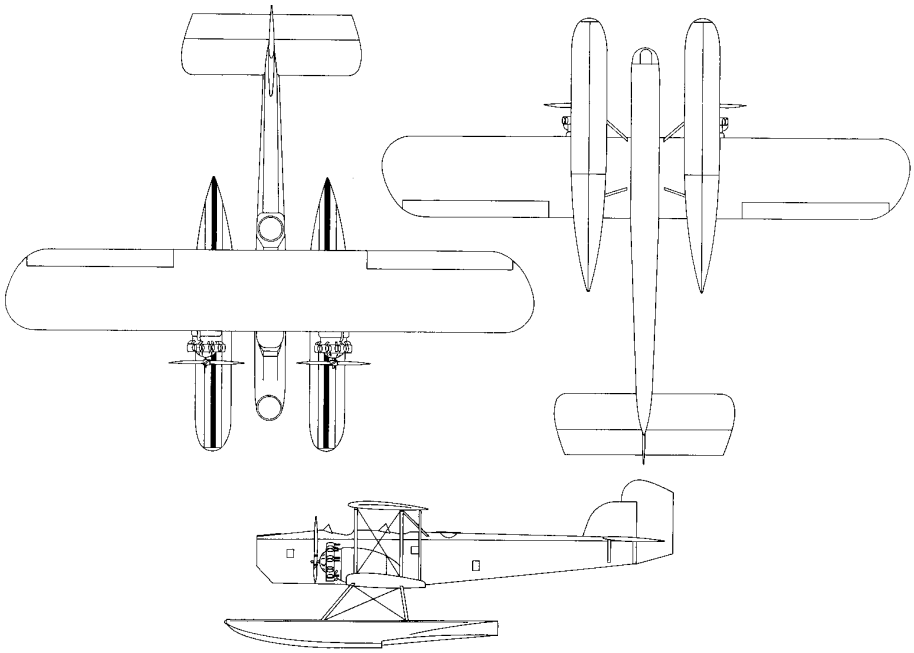

Line drawings for a T2D-1.

T3M

The Martin T3M was an improved version of their SC. The Navy contract that ordered it in 1925 was for a torpedo bomber biplane capable of operating with wheels or floats. Martin eventually delivered 123 T3Ms under the designations T3M-1 and T3M-2. Both were three crew: pilot, bombardier and gunner. The T3M-1 was powered by a 575 horsepower Wright T-3 engine and the T3M-2 had a 770 horsepower Packard 3A-2500. In developing the aircraft, the same airframe and Bureau Number A7224 was used for both the XT3M-1 and XT3M-2.

An XT3M-3.

The date the aircraft first flew is uncertain but is estimated to have done so in July 1926. It was first delivered to squadron on 7 September 1926 to VT-2. It was last reported in squadron when VP-3S reported a T3M-2 on 30 July 1932.

T3M-1:

Twin float seaplane. Specifications for the T3M-1 are as follows:

Gross weight	9,856 lbs
Empty weight	6,324 lbs
Total useful load	3,532 lbs
Armament	one .30 cal. gun in rear cockpit
Wing Area	848 sq ft
Wing span upper	52 ft 4 in
Wing span lower	56 ft 7 in
Height	16 ft
Length	42 ft 9 in

Bureau Numbers

T3M-1	A7065-A7078
XT3M-1 & XT3M-2	A7224
T3M-2	A7225-A7322
T3M-2 & XT3M-3	A7323

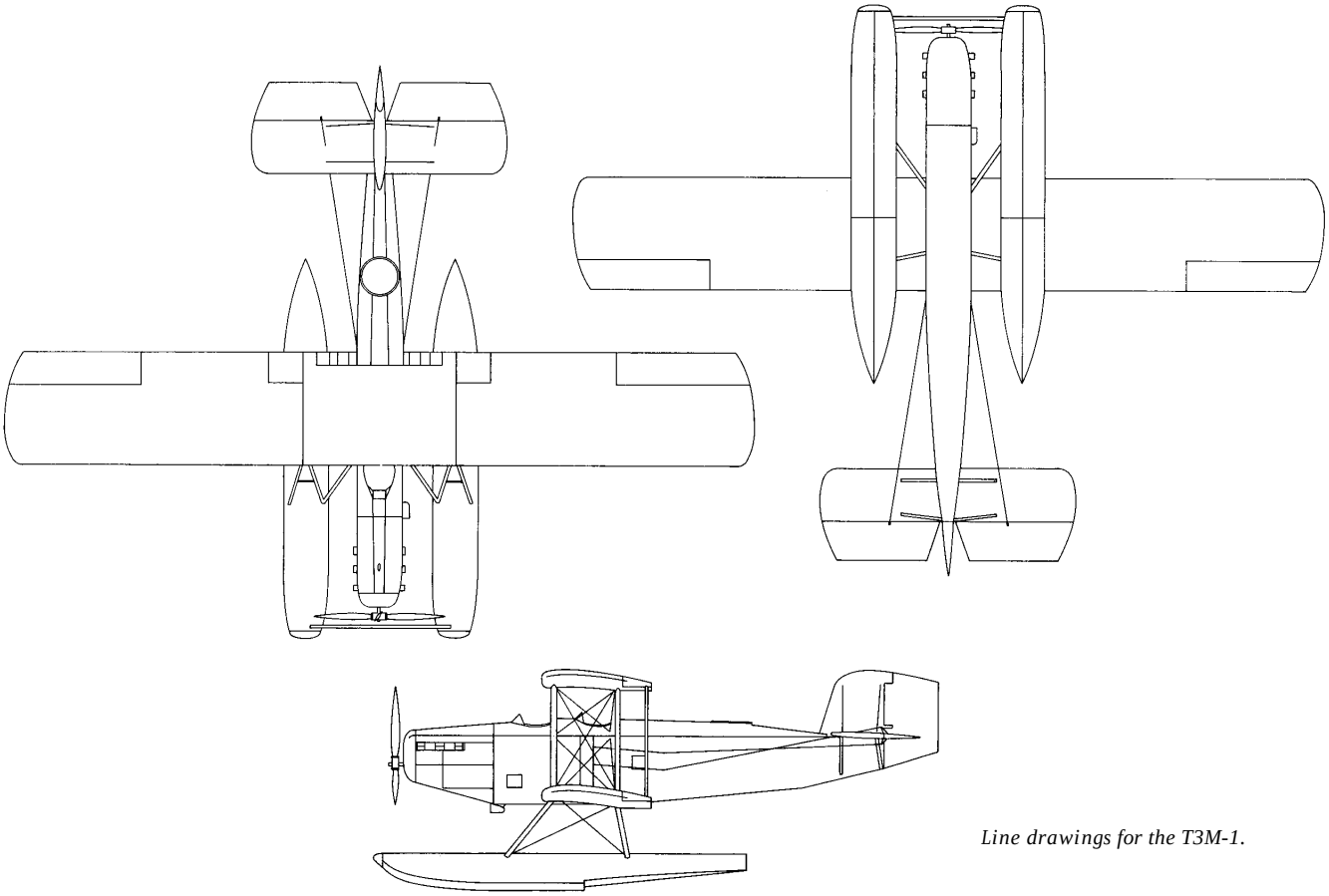

Line drawings for the T3M-1.

T4M and TG and TE

The earliest model of this aircraft was the Martin (Cleveland) Model 74. Martin designed and developed this torpedo bomber and sold it to the Navy who designated it T4M-1 and later referred to it as the XT4M-1. It was purchased for experimental use to determine the practicality of its type for further production. A production contract of 30 June 1927 ordered 102 T4M-1 aircraft. They were described as single engine, three purpose convertible biplane equipped for catapulting and for deck landing, with emergency floatation gear. The aircraft would be used mainly for carrier operations. It had a crew of three: pilot, bombardier, and gunner. Counting the XT4M-1 and the 102 production planes, Martin delivered 103 aircraft designated T4M.

On 25 June 1929, the Bureau of Aeronautics awarded to the Great Lakes Aircraft Company a contract for 18 aircraft designated TG-1. By June 1929, Great Lakes had taken over Martin's plant at Cleveland. On 2 July 1930, the Navy awarded a contract to the Detroit Aircraft Corporation for 32 TE-1 aircraft which were to be similar to Martin's T4M-1. Detroit subcontracted much of the work on the TE-1 to Great Lakes and soon encountered serious financial difficulties. Eventually Detroit virtually subcontracted to Great Lakes the entire job to build the TE-1s. For this reason, the Navy accepted the TE-1s with Great Lakes data plates and the designation TG-2. Great Lakes delivered a total of 50 aircraft designated TG.

The date of the T4M's first flight is not definitely known but is estimated to have occurred in May 1927. It was first delivered to a squadron on 9 August 1928 and was last delivered in December 1931. The designation last reported was a TG-2 by VT-6 on 31 March 1938.

A T4M-1 assigned to Naval Air Reserve Base Seattle.

T4M-1 (Landplane):

Specifications for the T4M-1 are as follows:

Power plant	525 hp Pratt & Whitney R-1690 (575 hp Wright R-1820 in T4M-2)
Gross weight	6,599 lbs
Empty weight	3,890 lbs
Total useful load	2,709 lbs
Armament	One flexible .30 cal. gun, rear cockpit
Wing area	656 sq ft
Wing span	53 ft both wings
Height	13 ft 5 in
Length	35 ft 7 in

A TG-1 at Hampton Roads, Virginia, September 1935.

TG-1 (Landplane):

Specifications for the TG-1 are as follows:

Power Plant	Pratt & Whitney R-1690 in TG-1
	Pratt & Whitney R-1820 in TG-2
Gross weight	7,652 lbs
Empty weight	4,179 lbs
Total useful load	3,472 lbs
Armament	one flexible .30 cal. gun, rear cockpit
Wing area	656 sq ft
Wing span	53 ft both upper and lower
Height	14 ft 9 in
Length	34 ft 8 in

Bureau Numbers

XT4M-1	A7566
T4M-1	A7852-A7899, A7596-A7649
TG-1	A8458-A8475
TG-2	A8697-A8728

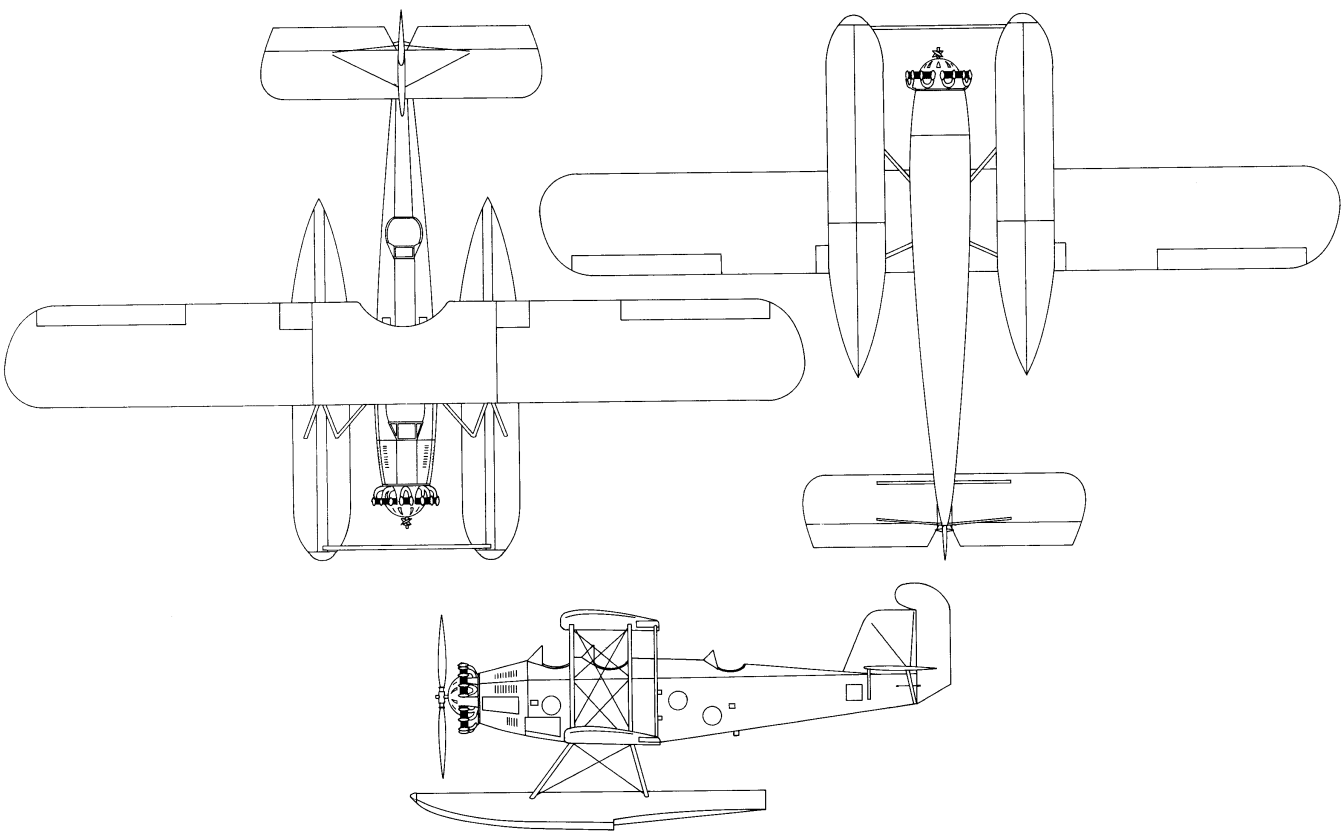

Line drawings for the T4M-1.

TB

The Boeing Company built this single engine amphibious float plane to Bureau of Aeronautics Design Number 35. Only three were produced and all of them were delivered to the Navy during 1927. Powered by a 720 horsepower Packard 1A-2500, this large biplane, had a crew of three and, as a float plane, could carry up to 1,968 pounds of ordnance. The TBs were similar to the Martin T3M aircraft.

TB-1:

Specifications for the TB-1 are as follows:

Crew	three
Length	42 ft 7 in
Height	15 ft
Span	55 ft both wings
Wing area	868.4 sq ft
Weights	
gross	10,703 lbs
useful	4,405 lbs
Range	about 340 nautical miles at full speed

Bureau Numbers

TB-1	A7024-A7026

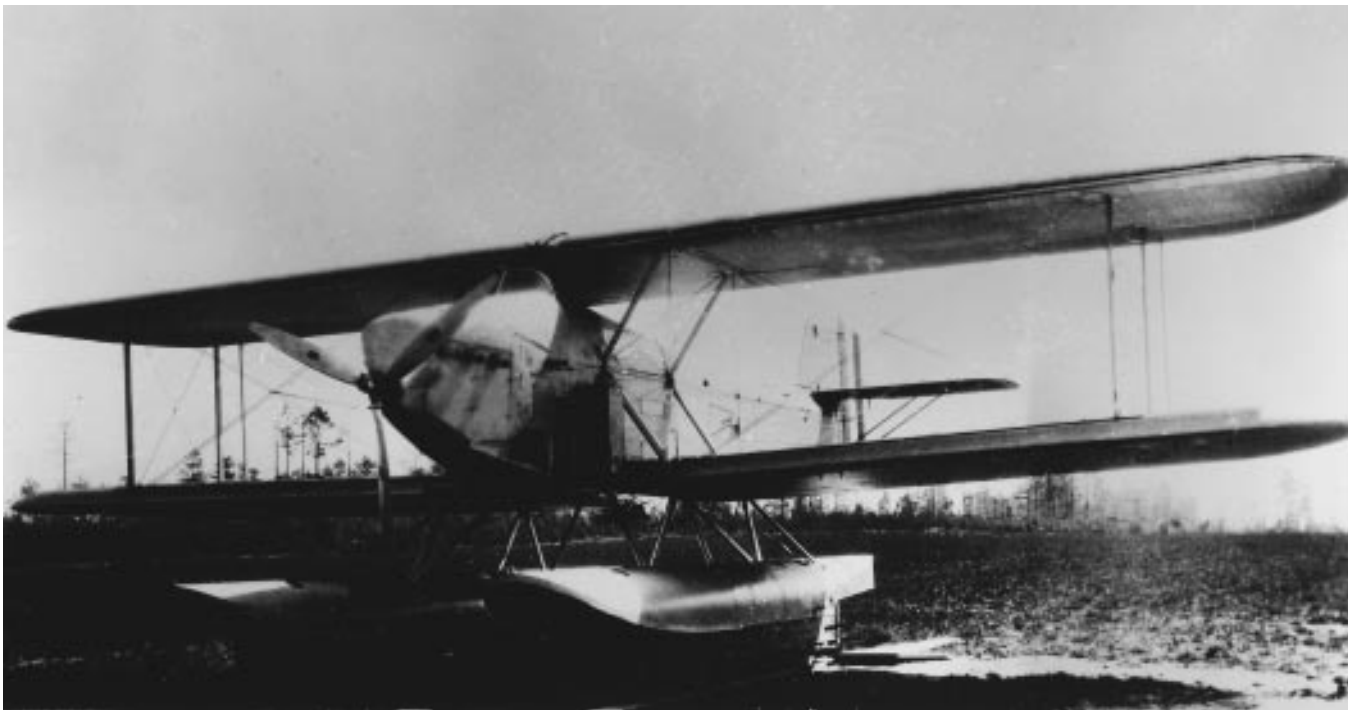

An XTB-1, Boeing's version of the Martin T3M.

TBD Devastator

In 1934 the Navy conducted a competition for a new carrier-based torpedo bomber. Great Lakes submitted a design for a biplane, Douglas for a monoplane. The Great Lakes' design was built as the TBG-1. The design which Douglas was invited to reduce to practice, first flew on 15 April 1935 and became the Navy's initial carrier-based monoplane, the TBD Devastator. The first delivery occurred on 5 October 1937. The last delivery was in November 1939. The aircraft was last reported in squadron on 31 August 1942. A total of 130 aircraft were accepted.

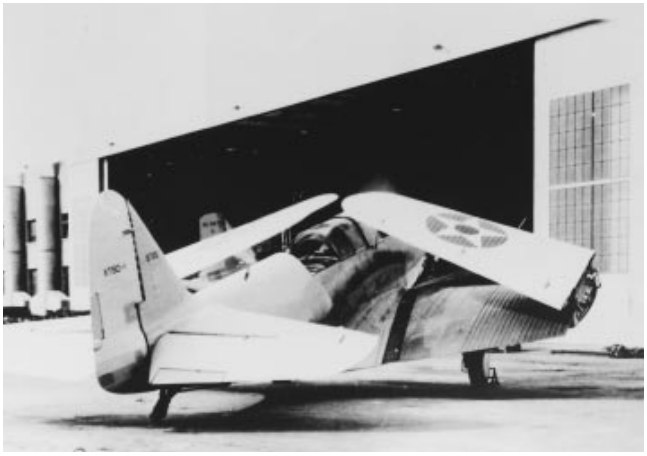

The XTBD-1 Devastator.

Models Accepted from the Manufacturer (New Builds)

XTBD-1:

Experimental version of the Douglas design.

TBD-1:

Production version of the XTBD-1. It was a horizontal bomber, three-place, carrier-based aircraft. Specifications for the TBD-1 are as follows:

Maximum gross weight	10,261 lbs
Maximum fuel weight	1,080 lbs
Maximum speed	221 mph at 8,000 ft
Maximum range	1,080 statute miles
Armament:	
One .30 cal. synchronized gun (500 rounds)	
One .30 cal. flexible gun (600 rounds)	
Up to 1,500 pounds of bombs or up to a 1,850 pound torpedo	
Engine	one 900 hp Pratt & Whitney R-1930-64
Wing span	50 ft (folded, 25 ft 8 1/2 in)
Length	35 ft

Other Designations

TBD-1A:

Twin float landing gear added by the Naval Aircraft Factory.

Bureau Numbers

XTBD-1	9720
TBD-1	0268-0381
TBD-1	1505-1519

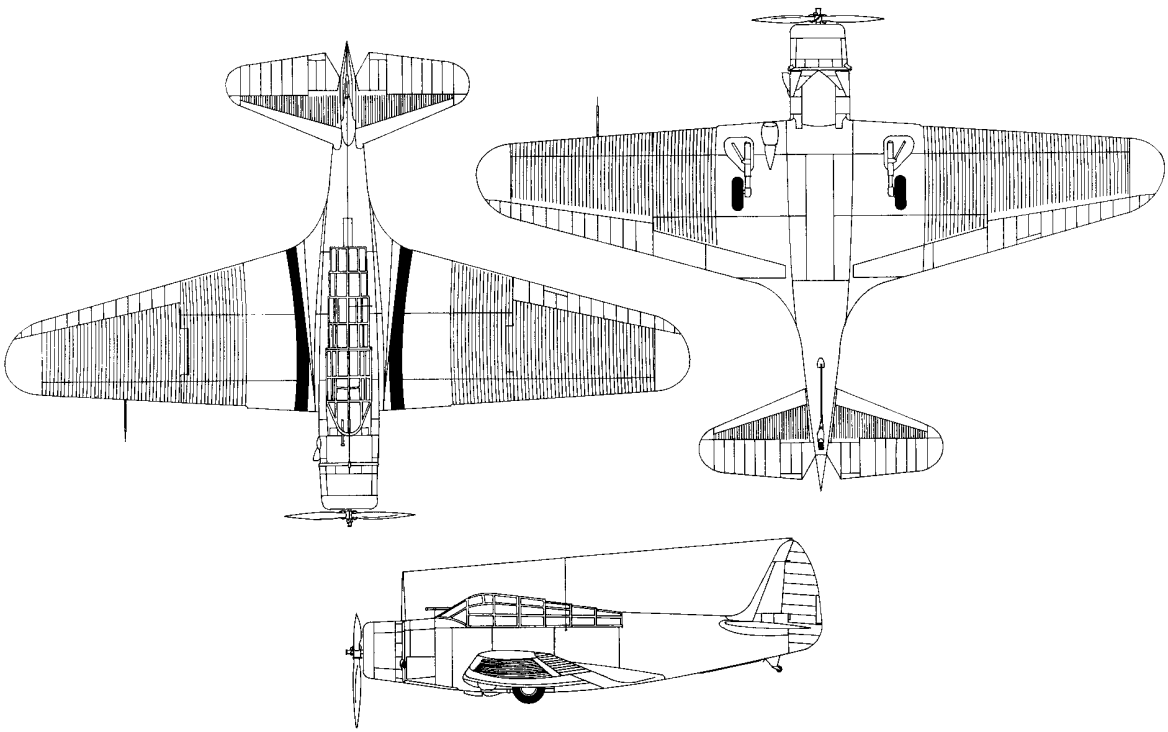

Line drawings for the TBD-1.

TBF/TBM Avenger

Among the Grumman Company's outstanding contributions to naval aviation, the Avenger perhaps holds the honor of being the most versatile. It was in squadron from March 1942 until October 1954, a shorter time than some other aircraft, but during those years it served as a torpedo bomber, an ASW aircraft, and the Navy's first carrier-based AEW plane; there was also a modification for night operations, one for radar countermeasures, and another for Carrier Onboard Delivery.

The contract of 8 April 1940 which the Navy awarded to Grumman was for the company's first attack aircraft. Until that time, Grumman's work for the Navy had been entirely with fighters. The first flight of the mid-wing monoplane, three-place, torpedo bomber occurred on 7 August 1941. During the Second World War, the Avenger was produced by Grumman as the TBF and by the Eastern Aircraft Division of General Motors as the TBM. Grumman produced a total of 2,290 aircraft, Eastern produced 7,546 aircraft. The last delivery to the Navy was made in September 1945.

The TBF-1 could carry up to 2,000 pounds of torpedoes or bombs in the bomb bay. It had a dorsal turret with a .50 calibre gun at the after end of the cockpit, a forward-firing .30 calibre gun at the nose cowling and another .30 calibre gun located ventrally facing aft. The TBF-1 was powered by a single 1700 horsepower Wright R-2600-8 engine.

The XTBF-3 was developed to provide the Avenger with the 1900 horsepower Wright 2600-20 engine. The production version of the XTBF-3 was never produced in its F designation but was built by Eastern as the TBM-3. The TBM-3's range was from 1,130 to 2,530 statute miles and an average speed of 150 mph.

The TBM-3 had a length of 40 feet 11½ inches, a height of 16 feet 9 inches. The wing span was 54 feet 2 inches (folded size was 19 feet).

Model Designations Accepted from Manufacturer (New Builds)

XTBF-1:
Experimental version of design.

TBF-1:
Production version of XTBF-1.

TBF-1B:
TBF-1 diverted from Navy delivery.

TBF-1C:
Same as TBF-1 but with provision for two .50 cal. wing guns.

XTBF-2:
Test bed for Wright experimental R-2600-10 engine.

A TBF-1 in flight.

XTBF-3:
Experimental version with Wright R-2600-20 engine.

TBM-1:
Built to same specifications as the TBF-1.

TBM-1C:
Same as TBF-1C.

XTBM-3:
Experimental version with Wright R-2600-20 engine.

TBM-3:
Production development of the XTBF-3 which was similar to the TBF-l but with improved engine, 1900 hp Wright R-2600-20.

TBM-3E:
TBM-3 equipped with ASW radar.

XTBM-4:
TBM-3 with structural strength increased to withstand 5Gs.

Other Designations

TBF-1CP:
Same as the TBF-1C but equipped with trimetregon camera for photo reconnaissance.

TBF-1D:
Same as TBF-1C except for special radio and radar installation.

TBF-1E:
Same as TBF-1C but equipped with special radar.

TBF-1J:
TBF-1 converted to utility plane.

TBF-1L:
The TBF-1, TBF-1C, TBF-1D, TBF-1E but equipped with searchlight mounted in bomb bay.

TBM-1CP:
Same as TBM-1C but equipped with trimetrogon camera for photo reconnaissance.

TBM-1D:
Same as TBF-1D.

TBM-1E:
Same as TBM-1C but equipped with special radar.

TBM-1J:
TBM-1 converted to utility plane.

TBM-1L:
TBF-1C, TBF-1D, or TBF-1E but equipped with searchlight mounted in the bomb bay.

TBM-3D:
Same as TBM-3 but equipped with special radar.

TBM-3E:
Same as TBM-3 but equipped with special radar (APS-4).

TBM-3J:
TBM-3 converted to utility plane.

TBM-3L:
Same as TBM-3 but with searchlight mounted in bombay.

TBM-3N:
TBM-3 equipped for night operations (all-weather).

TBM-3P:
Same as TBM-3 but with trimetrogon camera for photo reconnaissance.

TBM-3Q:
TBM-3 equipped for ECM missions.

TBM-3R:
COD version TBM-3.

TBM-3S:
ASW version of the TBM-3E.

TBM-3S2:
Same as TBM-3S with improved ASW equipment and rearrangement of the after crew space.

TBM-3U:
Utility version of TBM-3E.

TBM-3W:
Same as TBM-3 but equipped as a special radar search plane.

TBM-3W2:
TBM-3W with improved ASW equipment and rearrangement of the after crew space with APS-20 radar.

Bureau Numbers

XTBF-1	2539-2540
TBF-1	00373-00392
XTBF-2	00393
TBF-1	00394-00658
TBF-1	01731-01770
TBF-1	05877-06491
TBM-1C	16792-17019
TBF-1	23857-24140
XTBF-3	24141
TBF-1	24142-24340
XTBF-3	24341
TBF-1	24342-24520
TBM-1	24521-25070
TBM-1C	25071-25174
XTBM-3	25175
TBM-1C	25176-25520
XTBM-3	25521
TBM-1C	25522-25699
XTBM-3	25700
TBM-1C	25701-25720
TBM-1C	34102-34105
TBM-1C	45445-45644
XTBM-3	45645
TBM-1C	45646-46444

TBF-1	47438-47637
TBF-1C	47638-48123
TBM-3E	53050-53949
TBM-3	68062-69538
TBM-1C	73117-73498
TBM-3E	85459-86296 (Deliveries of 86293-86296 canceled)
TBM-3E	91107-92006 (Deliveries of 91753-92006 canceled)
TBM-3	97532-97672 (Deliveries canceled)
XTBM-4	97673-97675
TBM-4	97676-98601 (Deliveries canceled)
TBM-4	102576-104575 (Deliveries canceled)
TBM-4	117729-118928 (Deliveries canceled)

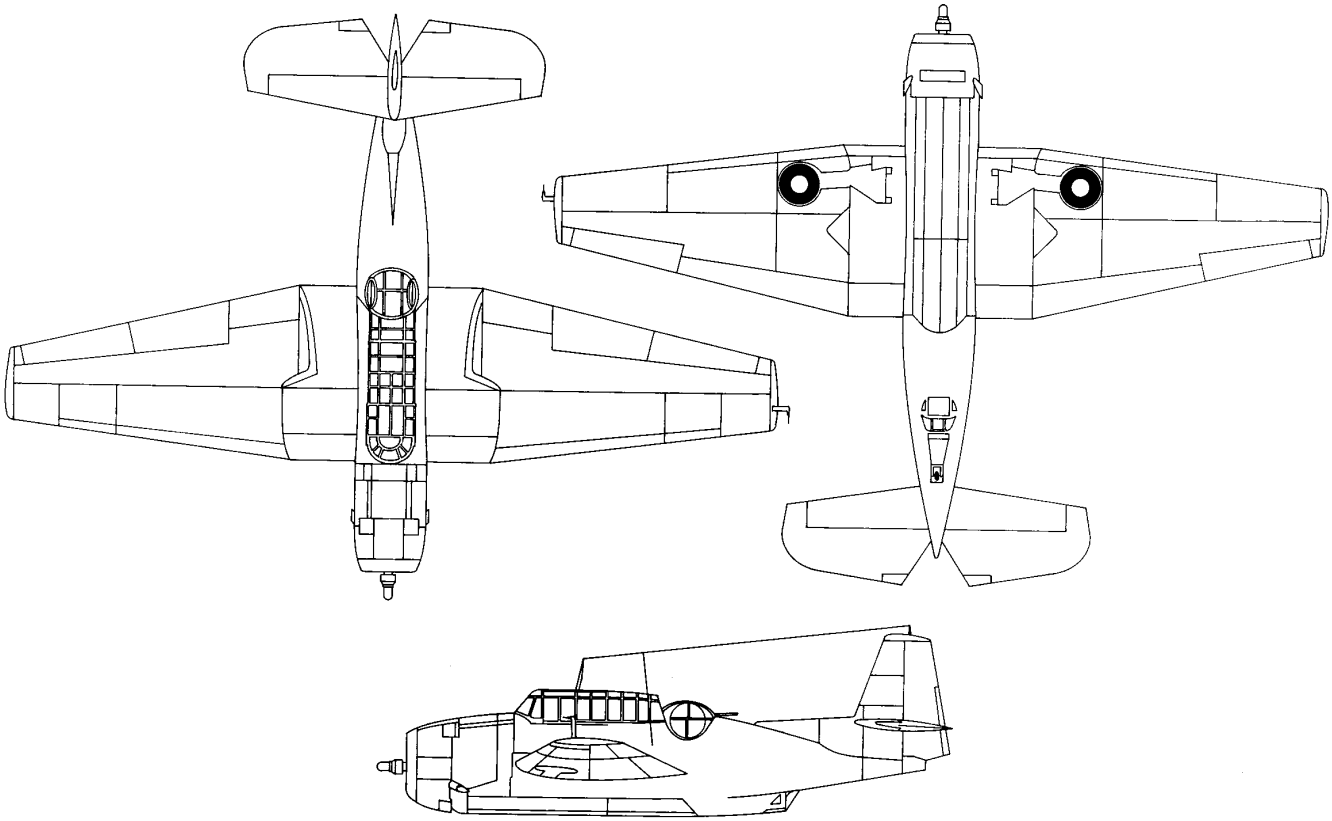

Line drawing for a TBF-1.

TBY Seawolf

Although Vought designed and built the prototype of the TBY, and Consolidated built 180 production aircraft, the Seawolf never served operationally. Vought designed the torpedo bomber on a Navy contract awarded 22 April 1940, but heavy production orders led both the Navy and the firm to conclude that another manufacturer should build the aircraft in quantity. Consolidated received an order for 1,100 planes, but built only 180 before the order was canceled. The lone Vought aircraft was designated XTBU-1. The Consolidated version was designated TBY-2.

A flight of TBYs, July 1945.

First flight	22 December 1941
Last reported in squadron	A TBY-2 on 31 Aug 1945

TBY-2:

Specifications for the TBY-2 are as follows:

Weight	
Gross	17,491–18,940 lbs
Empty	11,366 lbs
Wing span	56 ft 11 5/32 in
Wing area	440 sq ft
Height	18 ft 6 1/2 in
Length	39 ft 2 1/4 in
Ordnance:	
Guns	three fixed .50 cal. with 640 rounds one flexible .50 cal. with 400 rounds one flexible .30 cal. with 500 rounds
Bomb capacity	2,000 lbs internal 2,000 lbs external

Bureau Numbers

TBY-2	30299-31398 (30368-30370 canceled)
TBY-2	30481-31398 (all canceled)
TBY-2	30369

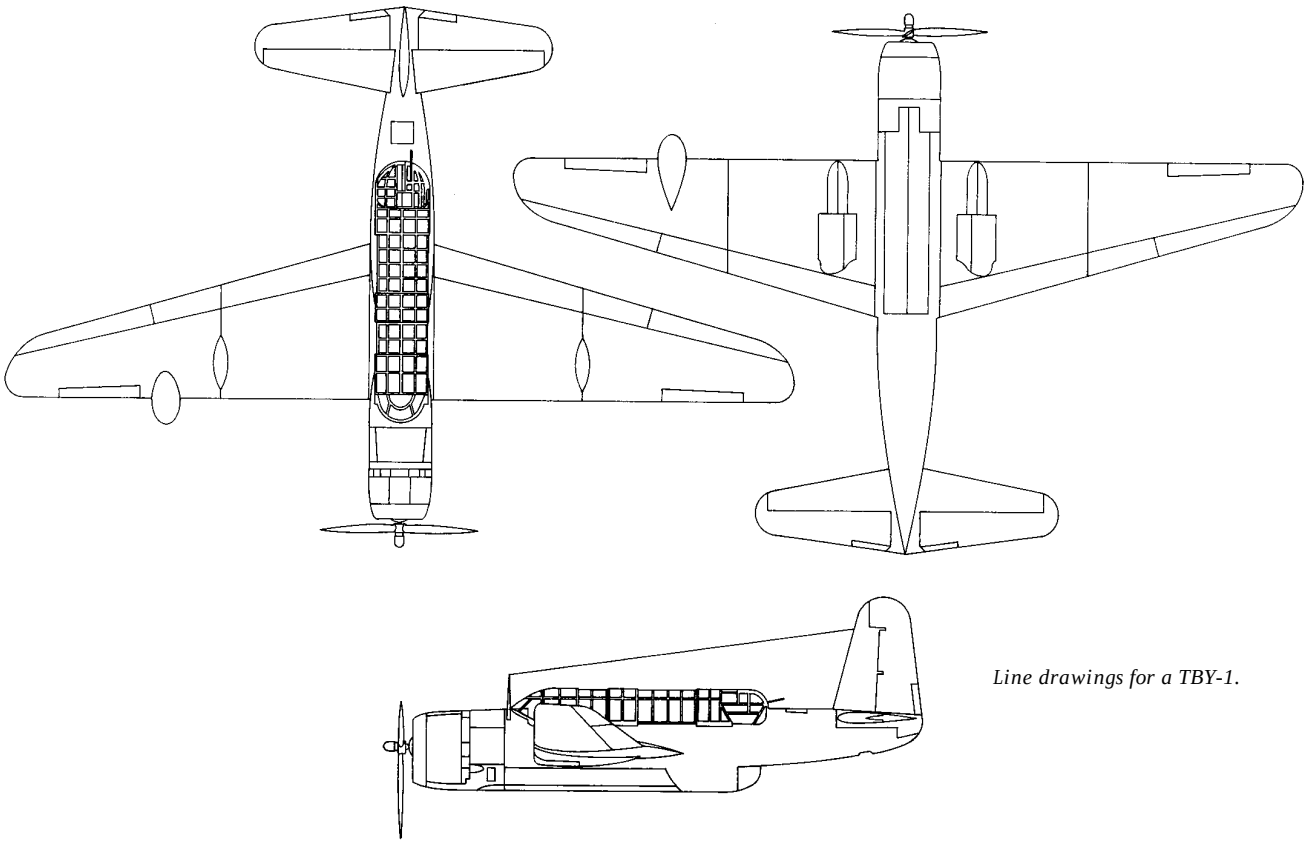

Line drawings for a TBY-1.

TC-4C Academe

In December 1966, the Navy ordered nine Grumman Gulfstream I aircraft converted to train the bombardier navigator for the A-6 Intruder. Deliveries of the TC-4C Academe began in October 1967 and were completed in May 1968. Characteristics of the TC-4C are as follows:

Power Plant	Two 11,400 lb Rolls Royce Spey MK 511-8 turbofans.
Maximum Range	3,045 nautical miles
Weight	
Maximum Takeoff	57,500 lbs
Dimensions	
Wing Span	69 ft 10 in
Wing Area	793.5 sq ft
Length	79 ft 11 in
Height	24 ft 6 in
Ordnance:	None

Bureau Numbers

TC-4C	155722-155730

A TC-4C Acadame in flight.

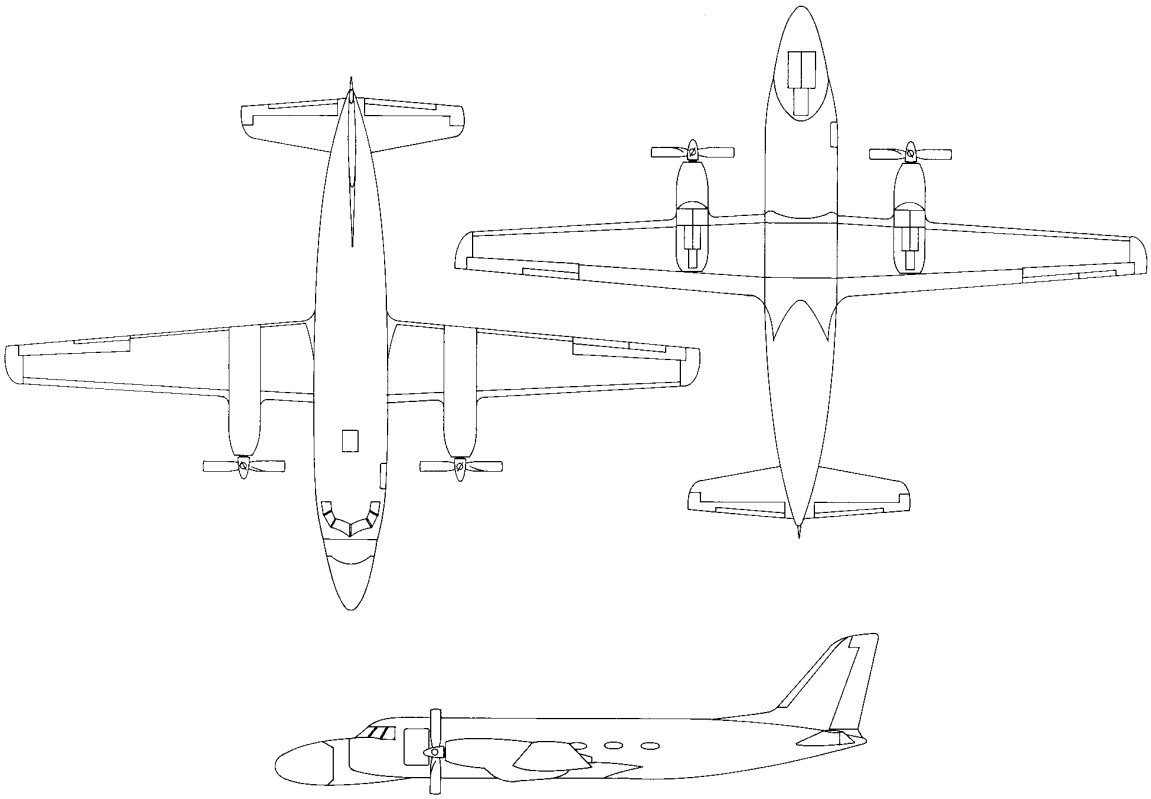

Line drawings for a TC-4C.