Rec'd 5/15/96

DEPARTMENT OF THE NAVY

USS BUNKER HILL (CG 52)
FPO AP 96661-1172

IN REPLY REFER TO:
5750
Ser 00/112
16 Apr 96

From: Commanding officer, USS BUNKER HILL (CG 52)
To: Director of Naval History (N09BH), Washington Navy Yard, DC 20374-0571

Subj: COMMAND HISTORY (OPNAV 5750-1)

Ref: (a) OPNAVINST 5750.12E

Encl: (1) Command Composition and Organization
(2) Chronolgy of Events
(3) Narrative
(4) Supporting Documents

1. In accordance with reference (a), USS BUNKER HILL's 1995 Command History is forwarded. Enclosures (1) through (4) document the ship's activities throughout calendar year 1995. Future inquiries may be referred to the ship's Executive Officer.

G. W. SCHNURRPUSCH

COMMAND COMPOSITION AND ORGANIZATION

MISSIONS:

o Primary:	Air Warfare	(AW)
	Undersea Warfare	(USW)
	Surface Warfare	(SUW)
	Strike Warfare	(STW)
	Electronic Warfare	(EW)
	Command, Control, & Communications	(CCC)
	Mobility	(MOB)
o Secondary:	Intelligence	(INT)
	Amphibious Warfare	(AMW)
	Mine Warfare	(MIW)
	Fleet Support Operations	(FSO)
	Non-combat Operations	(NCO)

ORGANIZATION:

USS BUNKER HILL is a TICONDEROGA-class, Aegis, guided missile cruiser. Throughout 1995, it served in the administrative command of the Commander, Carrier Group FIVE. As such, it operated as a major component of the Forward-Deployed Naval Force (formerly Overseas Family Residency Program) and was permanently deployed to Yokosuka, Japan.

Within the SEVENTH Fleet area of responsibility, the ship was operationally assigned to:

- o Commander, SEVENTH Fleet
- o Commander, Task Force 70/Battleforce SEVENTH Fleet
- o Commander, Task Force 75/Surface Combatant Force, SEVENTH Fleet
- o Commander, Task Group 70.1/USS INDEPENDENCE Carrier Battlegroup

On deployment in the Arabian Gulf, the ship was additionally assigned to:

- o Commander, FIFTH Fleet
- o Commander, Task Force 50/Battleforce Arabian Gulf

SUBORDINATE ORGANIZATIONS:

BUNKER HILL served as the INDEPENDENCE Carrier Battlegroup Air Warfare Commander throughout 1995 plus the Regional Air Warfare Commander within the Arabian Gulf. As such, all primary missile ships and the fighter and surveillance portions of Carrier Airwing FIVE were BUNKER HILL's tactical responsibility for employment over water.

During 1995, BUNKER HILL embarked Helicopter Anti-submarine Squadron Light FIVE ONE, Detachment THREE.

DISCUSSION:

USS BUNKER HILL is one of the most capable major combatants, possessing some of the most advanced systems in the surface Navy. It is one of the premier keystones of the battlegroup's offensive and defensive capabilities. BUNKER HILL is fully capable of a broad array of missions, including:

- o providing broad area surveillance and battlespace management
- o area defense of a Navy, joint, or combined (allied) battleforce or multi-unit Surface Action Group
- o strike operations as a single unit or in command of missile and aircraft strike units
- o theater ballistic missile surveillance
- o sustained presence or combat operations in multi-threat, open ocean, or constrained littoral environments

The core of BUNKER HILL's tactical capabilities is the Aegis Weapons System -- a state-of-the-art, computer-assisted, nearly fully integrated weapons system that can provide real-time detection, identification, acquisition, tracking, targeting, and engagement of multiple contacts in a high density battlespace. The four components of the Aegis Weapons System -- the SPY-1A Radar, the Weapons Control System, the Command and Decision System, and the Aegis Display System are each computer-assisted with AN/UYK-7 computer banks. These permit the Aegis System to automatically manage the immense data presented in a multi-warfare environment, provide disciplined displays of the tactical situation, identify selected contacts, provide assessments of threat levels per contact, scheudle potential responses, and, if permitted by the command-level decison-maker, to engage many air contacts automatically. All automated decisions are subject to rules -- doctrine -- that are embedded within the Aegis system or created and activated by the ship's tactical decision-makers as needed.

While management of the air battlespace is highly automated, the ship's tactical actions in response to surface, undersea, or land attack tactical situations remain mostly independent of the Aegis Weapons System with the exception of display functions. Undersea warfare is dominated by the ship's AN/SQS-53A Sonar and MK-46 torpedoes -- ship or helo launched. Surface warfare is dominated by the Harpoon surface-to-surface cruise missiles and SM-2 missiles in surface mode, backed by the 5"/54 cal guns. Land attack is dominated by the Tomahawk Land Attack Missile battery.

All warfare areas are highly integrated with the ship's command and control systems plus its electronic warfare capabilities. As a result, any tactical action by BUNKER HILL is very likely to be an integrated mix of ship's sensors and weapons, other ships' systems, and carrier-based or land-based tactical aircraft. BUNKER HILL is as much a command platform as it is a weapons platform.

The heart of the ship's main propulsion capability lies within its four LM-2500 Gas Turbine Engines and twin shafts with Controllable Reversible Pitch Propellers. These can drive the ship through the water at speeds in excess of 30 knots and stop the ship from any speed in about less than two ship lengths.

An electricity-intensive ship, BUNKER HILL's power is provided by three Allison 501-K17 Gas Turbine Generators, each producing 2500 KW and 4000 amps of electrical power.

The ship's most valuable adjunct system is its embarked Light Airborne Multi-Purpose System (LAMPS) -- the two SH-60B Seahawk helicopters. Multi-mission capable, these helos extend the ship's surface and undersea sensor ranges well beyond the horizon and can deliver two MK-46 torpedoes per sortie. They are used extensively for surface contact management and possess their own datalink for communications and sensor management from the ship.

The ship has a complement of 35 officers, 33 CPOs, and 333 enlisted crewmen, including aviation detachment, cryptologic, and other various embarked personnel. The ship is always "full."

1995 SHIP'S CHRONOLOGY OF MAJOR EVENTS

DATE	EVENT
1-3 JAN	Holiday Leave & Upkeep, Yokosuka
4 JAN	Underway for Sea Trials
5 JAN	Moored, Yokosuka
6 JAN	INDEPENDENCE Battlegroup (IBG) AAW Syndicate meeting
20 JAN	Underway for training: TSTA II Embark HSL-51 Det 3 RAS with USNS GUADALUPE (TAO-200)
23 JAN	Precision anchoring drills, Yokosuka outer harbor Moored, Yokosuka
26 JAN	Underway for training: TSTA II/III Rendezvous with USS INDEPENDENCE (CV-62) and USNS KILAUEA (TAE-25)
29 JAN	RAS with USNS GUADALUPE (TAO-200)
1 FEB	MT Fuji PHOTO-EX in Sagami Wan
6 FEB	RAS with USNS GUADALUPE (TAO-200)
9 FEB	RAS with USNS GUADALUPE (TAO-200)
12 FEB	VERTREP with USNS MARS (TAFS-1) RAS with USNS GUADALUPE (TAO-200)
14 FEB	RAS with USNS GUADALUPE (TAO-200)
16 FEB	RAS with USNS GUADALUPE (TAO-200)
17 FEB	Moored, Yokosuka
21 FEB	Underway for training: ISE Precision anchoring drills, Yokosuka outer harbor
22 FEB	Black History Month celebration
23 FEB	Moored, Yokosuka
27 FEB	Ship's CMC (HMCM(SW/SS) Beckwith) retires in ceremony onboard
28 FEB	Underway for training: ISE
3 MAR	Moored, Yokosuka
6 MAR	IBG AAW Syndicate meeting
7 MAR	CMS Inspection
13 MAR	Underway for training: FEP
14 MAR	JMSDF/JASDF Air Defense Demo "ADX 95" Rehearsal
15 MAR	JMSDF/JASDF Air Defense Demo "ADX 95" Rehearsal Visit by CO, ATGWESTPAC: FEP Outbrief
17 MAR	JMSDF/JASDF Air Defense Demo "ADX 95" Visit by JMSDF/JASDF/GOJ dignitaries
18 MAR	Moored, Yokosuka
19 MAR	Underway for Qingdao, PRC
20 MAR	Underway Memorial Service to USS FRANKLIN (CV-13) near Okinawa

21 MAR	COMCARGRU FIVE embarks
22 MAR	Moored, Qingdao, PRC
25 MAR	Underway to rendezvous with IBG COMCARGRU FIVE disembarks and shifts his flag to INDEPENDENCE
28 MAR	RAS with USNS GUADALUPE (TAO-200)
29 MAR	Moored, Yokosuka
6 APR	IBG AAW Syndicate meeting
7 APR	Visit by VADM Quast, COMSC and BUNKER HILL commissioning CO
12 APR	Underway with IBG for Okinawa: MSL-EX with IBG, IBG "spring training" and deployment work-up
14-15 APR	FIREX I: NSFS qualification at Okino Daito, Okinawa
16-19 APR	MSL-EX, Okinawa OPAREAs
18 APR	Live-firing, multi-platform HARPOON-EX
19 APR	Live-firing SAM-EX (2 SM-2s)
21 APR	RAS with USNS GUADALUPE (TAO-200)
23 APR	Moored to buoy, Hong Kong
28 APR	Underway with IBG to Gulf of Thailand
1 MAY	RAS with USNS GUADALUPE (TAO-200) CONREP with USNS MARS (TAFS-1)
3-23 MAY	Combined (GOT) and interoperable (BELLEAU WOOD ARG) Fleet Exercise "Cobra Gold 95"
10 MAY	RAS with USNS GUADALUPE (TAO-200)
11 MAY	Anchored, Pattaya Beach, Thailand
16 MAY	Underway with IBG, resume "Cobra Gold"
17 MAY	CONREP with USNS MARS (TAFS-1)
18 MAY	RAS with USNS GUADALUPE (TAO-200)
23 MAY	RAS with USNS GUADALUPE (TAO-200)
24 MAY	CONREP with USNS MARS (TAFS-1)
25 MAY	RAS with USNS GUADALUPE (TAO-200)
27 MAY	Asian-Pacific American Heritage celebration
28 MAY	Anchored, Okinawa Harbor Moored, White Beach, Okinawa
29 MAY	Underway: rejoin IBG Underway Memorial Service to USS BUNKER HILL (CV-17)
1 JUN	Moored, Yokosuka
5 JUN	Visit by RADM Sigler, COMPHIBGRU ONE -- SNA Luncheon
6-12 JUN	Cruise Missile Training Qualification Team Trainer (CMTQ-T)
12-16 JUN	Operational Propulsion Plant Exam (OPPE)
13 JUN	Underway for OPPE

Enclosure (2)

15 JUN	Moored, Yokosuka
16 JUN	IBG AAW Syndicate meeting
19 JUN	Underway for Okinawa
21 JUN	Moored, White Beach, Okinawa 50th Anniversary of the Battle of Okinawa, Memorial Service
23 JUN	Shift to Kin Wan (Bay) anchorage for additional memorial events
24 JUN	Shift to White Beach, Okinawa
26 JUN	Underway for Manila RAS with USNS GUADALUPE (TAO-200)
29 JUN	Anchored, Manila
2 JUL	Underway for Yokosuka
5 JUL	Night RAS with USNS GUADALUPE (TAO-200)
8 JUL	Moored, Yokosuka
10-17 JUL	Combat Systems Readiness Review (CSRR)
17-18 JUL	Cruise Missile Training Qualification (CMTQ) Inspection
22 JUL	Underway for "Friendship Cruise" Moored, Yokosuka
24 JUL	IBG Warfare Commanders Conference
25 JUL	Underway for UMI rehearsal
26 JUL	Moored, Yokosuka
31 JUL-4 AUG	INSURV Inspection
1 AUG	Underway for INSURV UMI Moored, Yokosuka
7 AUG	JMSDF/JASDF Air Warfare Orientation Seminar JMSDF/JASDF Air Defense Demo onboard
11 AUG	IBG AAW Syndicate meeting
13 AUG	Yokosuka "Friendship Day"
19 AUG-8 NOV	INDEPENDENCE Battlegroup deployment to the Arabian Gulf for Operations VIGILANT SENTINEL and SOUTHERN WATCH
19 AUG	Underway for the Arabian Gulf with IBG in accordance with Operation VIGILANT SENTINEL
27 AUG	RAS with USNS GUADALUPE (TAO-200)
28 AUG	CONREP with USNS MARS (TAFS-1)
29 AUG	Transit through the Straits of Malacca
30 AUG	RAS with USNS GUADALUPE (TAO-200)
2 SEP	IBG Warfare Commanders Conference
4 SEP	INCHOP to FIFTH Fleet Assume responsibilities as TF-58
6 SEP	RAS with USNS PECOS (TAO-197)
7 SEP	Transit through the Straits of Hormuz

8 SEP	IBG turnover with LINCOLN Battlegroup Assumed duties as TF-50 and Regional Air Warfare Commander
9 SEP	VERTREP with USNS SAN JOSE (TAFS-7)
10 SEP	RAS with USNS PECOS (TAO-197)
11 SEP	Commenced Operation SOUTHERN WATCH, positioned as CV shotgun in the Central Arabian Gulf (CAG)
14 SEP	Repositioned for Maritime Interdiction Operations (MIO) in the Northern Arabian Gulf (NAG) Assumed duties as Duty Strike Ship
15 SEP	RAS with USNS GUADALUPE (TAO-200)
16 SEP	Repositioned in CAG as CV shotgun VERTREP with USNS KILAUEA (TAE-25)
17-19 SEP	Portvisit, Bahrain
17 SEP	Anchored, Sitrah Harbor, Bahrain
20 SEP	Underway to CAG BUNKER HILL 9th Birthday celebration
22 SEP	RAS and VERTREP with USNS PECOS (TAO-197)
23-26 SEP	Portvisit UAE
23 SEP	Moored, Jebel Ali
27 SEP	Underway to CAG
28 SEP	RAS with USNS GUADALUPE (TAO-200)
1 OCT	Repositioned to NAG as MIO Ship Assumed duties as Duty Strike Ship
2 OCT	RAS with USNS PECOS (TAO-197)
3 OCT	Repositioned to CAG as CV shotgun
4 OCT	VERTREP with USNS SAN JOSE (TAFS-7)
6 OCT	RAS with USNS PECOS (TAO-197) Repositioned in NAG as MIO Ship Assumed duties as Duty Strike Ship
9 OCT	Repositioned in CAG as CV shotgun
10 OCT	RAS with USNS GUADALUPE (TAO-200)
11-14 OCT	Portvisit UAE
11 OCT	Moored, Dubai
15 OCT	Underway to Southern Arabian Gulf (SAG) to rendezvous with IBG
17 OCT	Transited the Straits of Hormuz
18 OCT	RAS with USNS GUADALUPE (TAO-200)
19 OCT	OUTCHOP FIFTH Fleet Resumed duties as TF-70
23 OCT	RAS with USNS GUADALUPE (TAO-200)
24 OCT	Transited the Straits of Malacca
25 OCT	CONREP with USNS JOHN ERICISSON (TAO-194)
26 OCT	RAS with USNS GUADALUPE (TAO-200)
28-31 OCT	Portvisit Hong Kong (heavy weather diversion from previous planned portvisit to Manila)
28 OCT	Anchored, Hong Kong

1 NOV	Underway with IBG to Yokosuka VERTREP with USNS KILAUEA (TAE-25)
5 NOV	RAS with USNS GUADALUPE (TAO-200) Visit by VADM Clemins, COMSEVENTHFLT
6-18 NOV	Combined Fleet Exercise with the JMSDF and JASDF "Annual-Ex 07G" and "Cope North"
7 NOV	RAS with USNS GUADALUPE (TAO-200)
8 NOV	Moored, Yokosuka (deployment completed)
12 NOV	Underway with IBG to resume "Annual-Ex" and "Cope North"
15 NOV	RAS with USNS GUADALUPE (TAO-200)
16 NOV	Visit by JMSDF and JASDF dignitaries
17 NOV	RAS with JDS HAMANA (dry hook-up)
18 NOV	Moored, Yokosuka

4-6 DEC	Logistics Management Assessment
11 DEC	CNO-directed "Good Order & Conduct Stand-down"
13 DEC	NAVSAFECEN Safety Survey
15 DEC-3 JAN	Holiday Leave & Upkeep

USS BUNKER HILL 1995 NARRATIVE

The following are highlights of the 1995 operating year. In summary, the year began by conducting the Total Ship's Training Availability (TSTA) II/III and Final Evaluation Problem (FEP) training cycle in January to March. Also in March, the ship conducted a historic portvisit to Qingdao, People's Republic of China, with COMCARGRU FIVE embarked. April to June was focused on INDEPENDENCE Battlegroup (IBG) advanced training and deployment work-up in preparation for the Arabian Gulf deployment later in the summer. June to August was dominated by major inspections, despite preparing to deploy, including CMTQ, CSRR, OPPE, and INSURV. August through November constituted the IBG deployment to the Arabian Gulf followed by two concurrent, major, fleet exercises with the JMSDF and the JASDF, "Annual-Ex 07G" and "Cope North."

Through the year, BUNKER HILL earned its fourth consecutive Battle "E" Award (notified in April '96) and the 1995 COMSEVENTHFLT Award for AAW Excellence.

THE TRAINING CYCLE

BUNKER HILL's training cycle (TSTA series/FEP) served two purposes -- it was the first time that the ship had experienced the fleet's new Tactical Trainng Strategy, that used a phased Total Ship's Availability/Final Evaluation Problem approach, and it was the first formal shipwide training by an outside resource in a year. Further, BUNKER HILL had not had any measurable sea time for months, owing to 1994 being dominated by SRA-5, a Korean contingency with the IBG that precluded aggressive training, and a two-month voyage repair in drydock to replace the ruptured sonar dome.

Nevertheless, BUNKER HILL completed the TSTA II/III/FEP sequence using resources from the Afloat Training Group WESTPAC and the Aegis Training Support Group Yokosuka and completed it in much less time than is normally afforded to the entire training sequence.

QINGDAO, PRC

In support of important CINCPACFLT and COMSEVENTHFLT regional initiatives -- to remain "engaged" with Pacific Rim countries -- BUNKER HILL was selected to conduct a historic portvisit to Qingdao. The city is a reasonably sizable city on the Yellow Sea and is the home base of the Peoples Liberation Army (NAVY)(PLA-N) North Fleet. The objectives of the portvisit were to simply have a "recreational" portvisit, show the American flag, including ensuring that all hands wore uniforms everywhere,

and demonstrate that the U. S. Navy could conduct low level, non-threatening portvisits which carried no hidden agenda in the hope that more portvisits would be made available to other SEVENTHFLT ships on a recurring basis. This was the first portvisit since the Tiananmen Square incident in 1986 and only the third visit by U. S. Navy ships since 1945. COMCARGRU FIVE, RADM B. J. Smith, embarked to lead the mission plus the SEVENTHFLT Band was added.

Despite very dense fog, BUNKER HILL entered port on 22 March with full dress ship and manning the rails. The Chinese greeting party was led by North Fleet Chief of Staff, RADM Ding Yiping, and Qingdao's Mayor, Qin Jiahao. Also at the pier were three LUDA-class destroyers and a MING-class diesel submarine.

Throughout the visit, BUNKER HILL held "visit ship." The PLA-N plus some local citizenry attended in large numbers -- very often returning more than once and asking many, probing questions. A special visit was made by the Commander, PLA-N, ADM Zhang Lianzhong, and his deputy, VADM He Pengfei. Short briefings were held in addition to a tour of the ship that included CIC. The ship and the PLA-N both hosted several receptions for all hands. The ship hosted a formal dignitary dinner, chaired by RADM Smith and attended by many VIPs, including: the PLA-N Commander, North Sea Fleet, VADM Wang Ji-Ying; the United States Defense Attache from Beijing, BGen M. T. Byrnes, USA; and the American Consul General, A. Macias.

Some of the crew were afforded a special overnight trip to Beijing to see Tiananmen Square, the Summer Palace, the Great Wall, and the Forbidden City.

"SPRING TRAINING"

The IBG's extended "spring training" period was the ship's first extended opportunity to operate with the IBG and as AW Commander. While other underway events earlier in the year provided some introduction, "spring training" was the first extended period. In fact, it was the first extended period with the INDY for BUNKER HILL since their return from deployment in early 1994, as BUNKER HILL did not sail for RIMPAC '94 with the rest of the IBG due to its SRA-5.

Moreover, this was the battlegroup work-up for deployment. The ship had been exercising its leadership as AW Commander since mid-1994 through seminars in the IBG AAW Syndicate and some short underway periods, but at-sea time was needed with the airwing. BUNKER HILL was innovating in many areas such as long-haul link operations, including with Korea, and instituting a new baseline air defense doctrine -- Joint Engagement Zone.

"Spring training" also afforded an opportunity to practice with the Royal Thai Navy and Air Force and with the amphibious ships of the BELLEAU WOOD ARG in the Gulf of Thailand in Exercise "Cobra Gold '95."

INSPECTIONS

Following the IBG return from the Gulf of Thailand, the ship tackled a rapid series of major inspections -- all within eight weeks of deployment. Two phases of the CMTQ series -- trainer and qualification -- started the period. The CSRR served two purposes: to check the ship's technical readiness and to help groom the systems for deployment. On top of the CSRR was the installation of the new USQ-125 multi-frequency datalink with satellite capability within the IBG. Competing demands were prevalent.

OPPE complicated the engineers' preparations for deployment but was completed successfully. For all hands, the summer inspection package culminated with the INSURV inspection, which showed substantial improvements over the ship's last INSURV -- nearly a third less material discrepancies.

DEPLOYMENT

BUNKER HILL's fifth deployment to the Arabian Gulf with the IBG turned out to be more demanding than originally expected. As the "normal" departure date grew closer, COMFIFTHFLT and the NCA reported some confusing and disturbing signals coming from the Gulf. What were Iraq's intentions in view of its history of resistance to international inspectors, etc.?

As a precautionary action, the NCA ordered a limited build-up of forces in the Arabian Gulf and directed the IBG to deploy more rapidly -- higher speed transit, no enroute stops (a portvisit to Phuket, Thailand, was cancelled were all IBG portvisits), and a potential for two-carrier operations was anticipated. The JCS authorized the accelerated deployment under the provisions of Operation VIGILANT SENTINEL.

Upon arrival in the Gulf, the confusing signals began to abate and the IBG relieved the departing LINCOLN CVBG, assumed duties as TF 50, and began its conduct of Operation SOUTHERN WATCH. Actually, Operation DESERT STORM is still active, too. The LINCOLN Battlegroup departed the Gulf immediately.

SOUTHERN WATCH is the effort to enforce the United Nations sanctions upon Iraq. BUNKER HILL's role increased inside the Gulf. In addition to being the battlegroup's AW Commander "AW," the ship became the Regional AW Commander "XW." While the tactics were easy enough, the challenge for the "XW" in this

battlegroup was the imposition of the new USQ-125 datalink. This was the datalink's first operation inside the Gulf plus the IBG was not completely familiar with it. Link management became the top time-consumer. Moreover, COMFIFTHFLT was receptive and promoted innovation, so BUNKER HILL was expected to aggressively test new link configurations, etc., throughout the region.

On top of those responsibilities, BUNKER HILL took its periodic turn in the rotation away from the INDY and moved into the NAG to serve as one of the MIO ships and as Duty Strike Ship with its Tomahawk battery. At one point, the ship's VBSS did make a boarding of a suspicious vessel but without incident.

Portvisits to Bahrain, Jebel Ali, and Dubai were all well received.

As the IBG was preparing to depart -- trying to prevent breaking the Navy's PERSTEMPO and TAR factors -- COMFIFTHFLT was still concerned about readiness in the Gulf, particularly in that no carrier was relieving the IBG immediately. To compensate, IBG mates MOBILE BAY and FIFE were retained inside the Gulf. INDY, BUNKER HILL, CURTS, and GUADALUPE headed back to Japan to join "Annual-Ex."

COMBINED FLEET EXERCISES "ANNUAL-EX" AND "COPE NORTH"

Operating with the JMSDF and JASDF is an important regional objective. Interoperability must be achieved. Further, the JMSDF now has Aegis DDGs in its fleet so there is a double implication for BUNKER HILL.

"Annual-Ex" and "Cope North" turned out to be very large, multi-warfare, multi-platform exercises -- arguably larger and much more challenging than any "Comptu-Ex" in CONUS. Moreover, in this year's exercise while COMCARGRU FIVE retained duties as CWC "AB" and BUNKER HILL remained as AW Commander "AW," the JMSDF became the Surface and Undersea Warfare Commander. Embarked in JDS KONGOU, the JMSDF's first Aegis DDG, Commander, Escort Flotilla FOUR, RADM Kaneda, received an eye-opening experience operating carrier-based aircraft.

In air warfare, KONGOU served as Alternate AW Commander and learned, too, about battleforce tactics, JEZ, and how to manage a complicated airspace.

The exercises were great successes for all and represented a substantial step forward for the USN-JMSDF relationship.

1995 SUPPORTING DOCUMENTS

- Ship's History

- Ship's Photo and "Welcome Aboard" pamphlets
  - English language
  - Japanese language

- Commanding Officer's photo and biography

- Command Philosophy

- Ship's Newsletters: "Sword of the Fleet"
  - January-March 1995
  - April-July 1995
  - August-December 1995

- 1994 Battle "E" Award
  - COMNAVSURFPAC 291305Z MAR 95

- 1995 COMSEVENTHFLT Award for AAW Excellence
  - COMSEVENTHFLT 250105Z FEB 96

- 1995 Battle "E" Award
  - COMNAVSURFPAC 181325Z APR 96

- Series of 1995 "KUDO" messages

- Series of newspaper articles, including:
  - Qingdao, PRC, portvisit
  - INSURV
  - Arabian Gulf deployment
  - "Annual-Ex" combined fleet exercise with the JMSDF
  - USS FRANKLIN (CV-13) and USS BUNKER HILL (CV-17) memorial services
  - 50th Anniversary of the Battle of Okinawa
  - Navy Relief Drive success
  - Friendship Cruise

- 1995 Ship's Cruisebook

USS BUNKER HILL ORGANIZATION

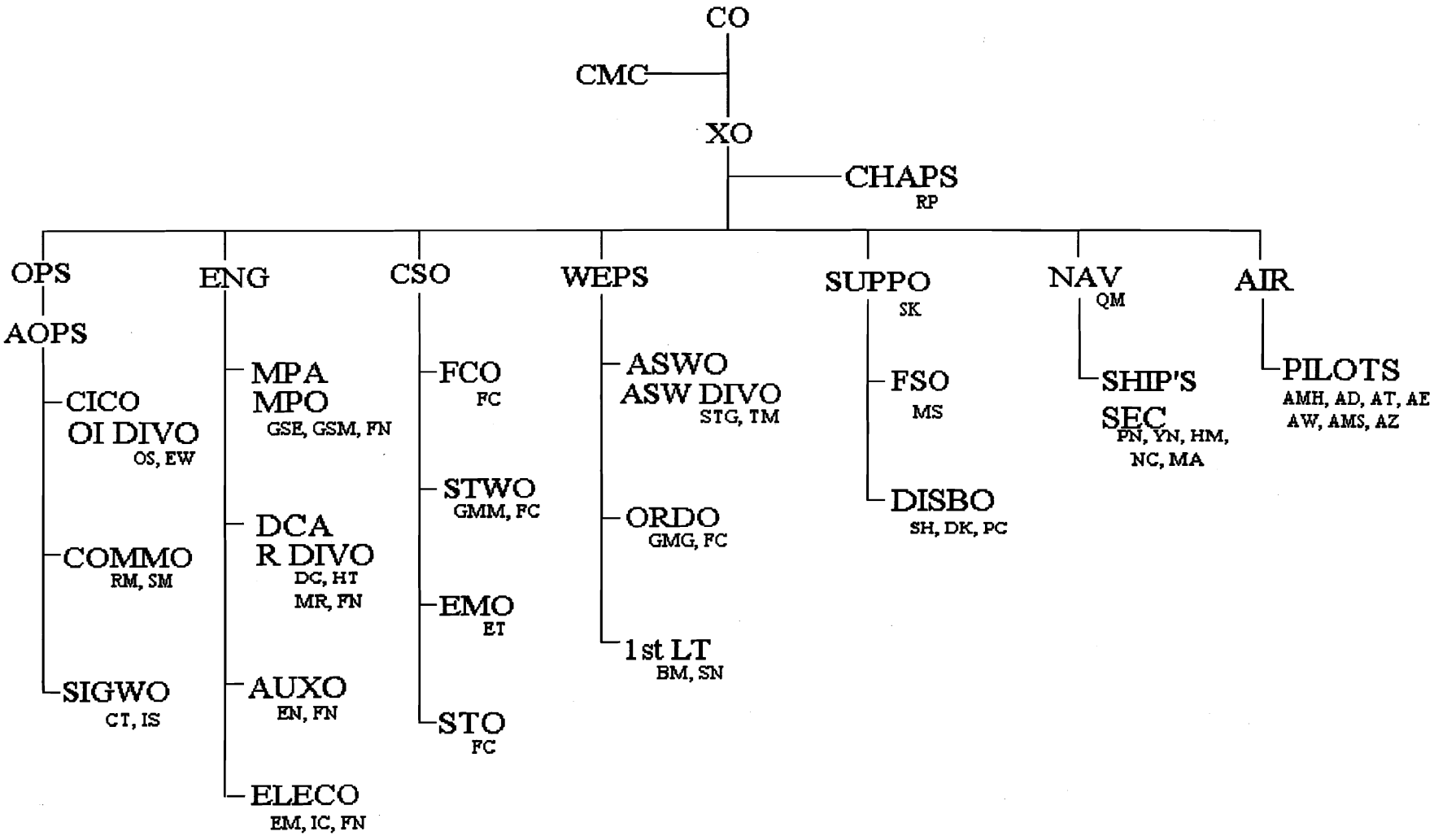

OFFICERS OF THE USS BUNKER HILL

Commanding Officer	CAPT G. W. Schnurrpusch
Executive Officer	CDR J. W. Bolin
	LCDR M. B. Yonehiro (11/95)
Chaplain	LT P. W. Riddle
	LT J. D. Denton (5/95)
Combat Systems Officer	LCDR H. D. Derbes
	LCDR J. M. Scukas (6/95)
Electronic Material Officer	LCDR(sel) D. P. Bowers
Fire Control Officer	LT C. M. Grivel
	LT S. W. Murdock (4/95)
Strike Warfare Officer	LT E. D. Miller
	ENS D. A. Bizot (12/95)
System Test Officer	LT(jg) C. Hernandez
Engineer Officer	LCDR M. S. Giauque
Auxiliaries Officer	LT P. E. Francios
	LT K. D. Ellsworth (4/95)
Damage Control Assistant	LT S. D. Browne
	LT B. S. Gowdy (8/95)
Electrical Officer	LT(j.g.) P. M. Keane
	LT(j.g.) M. J. Whidden (12/95)
Main Propulsion Officer	LT T. A. Darby
	ENS D. F. McClurg (3/95)
Main Propulsion Assistant	LT(jg) R. L. Raines
Repair Division Officer	ENS B. A. Alaniz (5/95)
Navigator	LT A.J. Gareffa
Ship's Secretary	LT(jg) M. J. Whidden
Operations Officer	LT N. J. Evans
	LCDR J. M. Dorey (5/95)
Assistant Operations Officer	CWO3 T. P. Larrea
	ENS F. P. Gorman (2/95)
Combat Information Center Officer	LT D. H. Renick
Communications Officer	LT K. D. Ellsworth
	ENS J. H. Hoeppner (4/95)
OI Division Officer	ENS D. A. Bizot (2/95)
	ENS F. P. Gorman
Signal Warfare Officer	CWO2 P. B. Archer
	ENS M. P. Gordon (2/95)

Supply Officer	LCDR Cutshall
Disbursing/ Sales Officer	LT K. S. Harris
	LT M. D. Reiners (2/95)
Food Services Officer	LT(jg) M. H. McGuire
	LT C. M. Stevens (1/95)
Weapons Officer	LCDR J.M. Scukas
	LCDR(sel) J.E. Morse (6/95)
Anti-Submarine Warfare Officer	LT S. M. Marciniak
Anti-Submarine Warfare Division Officer	ENS B. K. Doelfel (2/95)
First Lieutenant	LT(jg) D. A. Jacobs
	ENS A. Bullock (3/95)
Ordnance Officer	ENS M. C. Huhnke

CHIEF PETTY OFFICERS

Command Master Chief	HMCM(SW/SS) W. D. Beckwith MMCM(SS) W. H. Harrison (4/95)
Combat Systems Department	FCCM(SW) F. E. Carlson ETCS(SW) J. A. Hernandez FCC(SW) W. E. Abernathy FCC(SW) R. D. Carter GMC(SW/AW) T. L. Christman FCC(SW) S. Diaz FCC(SW) W. T. Etherton FCC(SW) R. S. Furuta GMC(SW/AW) R. Mangum FCC(SW) B. A. Walters GMC(SW) S. C. Wessman
Engineering Department	EMCS(SW) F. E. Armstrong GSMC(SW) C. F. Cascaddan GSCS(SW) T. A. Newhart GSCS(SW) D. A. Whitfield DCC(SW) N. J. Ehly ENC(SW) R. E. Juster EMC(SW) C. S. Mercado ICC(SW) D. Rodriguez GSEC(SW) D. J. Russel MRC(SW) W. E. Swanson ENC(SW) M. A. Witherow GSMC(SW) P. E. Winston
Navigation/Admin Department	MLCM(SW) R. J. Simpson HMCS(SW/AW) J. A. Selness QMC(SW) E. K. Beardon PNC(SCW) A. D. Opiniano
Operations Department	RMC(SW/AW) E. N. Archelleta OSC(SW/AW) D. A. Cvitanovich CTRC(SW) G. E. Fagan EWC(SW) W. D. Horcher SMC(SW/AW) W. F. Mecum CTRC(SW/SS) S. A. Pow OSC(SW) M. T. Sansing OSC(SW/AW) R. C. Stone RMC(SW) G. G. Vogel
Supply Officer Department	SKCM(SW/AW) T. S. Caballa MSC R. G. Castillones
Weapons Department	STGCS(SW/AW) M. L. Lucitt GMC(SW/AW) W. C. McKail BMC(SW) I. Scriven FCC(SW) W. B. Spinney STGC(SW/AW) E. E. Tilley