BUCKEYE

The Navy's two-place, high performance, basic jet training aircraft, the T-2 *Buckeye*, is a familiar sight in the skies over the areas surrounding Pensacola, Fla., and Meridian, Miss. The plane becomes even more familiar to the student pilot who selects the jet training syllabus as his route to becoming a Naval Aviator, since he will accumulate well over 100 hours in the versatile jet before proceeding to advanced training at Corpus Christi, Texas.

After completing preflight academics and primary flight training in the smaller prop-driven T-34, the student transitions to jet flying with initial flights in the T-2A in VT-7 or VT-9 at NAS Meridian. In addition to becoming accustomed to the new dimensions of jet flight and the basic piloting techniques involved, the student learns basic instruments and radio instrument procedures in the single-engined T-2A. Both squadrons also fly the twin-engined version of the *Buckeye*, the T-2B or T-2C. In these planes the student pilot transitions to two-engine operations as well as acquiring proficiency in precision, formation and night flying. After satisfactorily completing that syllabus, the would-be Naval Aviator is ready to return to NAS Pensacola once more, in order to tackle the exciting training provided in T-2C's at VT-4. There he learns the basics of air-to-air gunnery and practices field carrier landings until he is ready for the challenge of taking the *Buckeye* aboard the training carrier *Lexington* (CVT-16) to become carrier qualified.

With that achievement behind him, the student pilot is ready to continue on to advanced training in bigger and faster jets, but he will retain a fond remembrance of the squat-looking jet trainer in which he first learned his profession.

The *Buckeye* is well suited to the role it plays in the Navy's pilot training program. Its low stall speed and high maximum speed make it an ideal training plane for instruction in fighter tactics and weapons delivery as well as carrier landing techniques. The excellent visibility is also a valuable characteristic for both student and instructor. Equipped with speed brakes, pressurized and air-conditioned cockpit and Martin-Baker ejection system, the North American-produced T-2 is the pride of the Naval Air Basic Training Command.

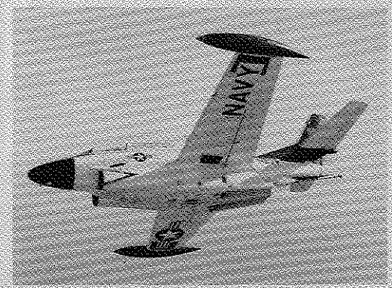

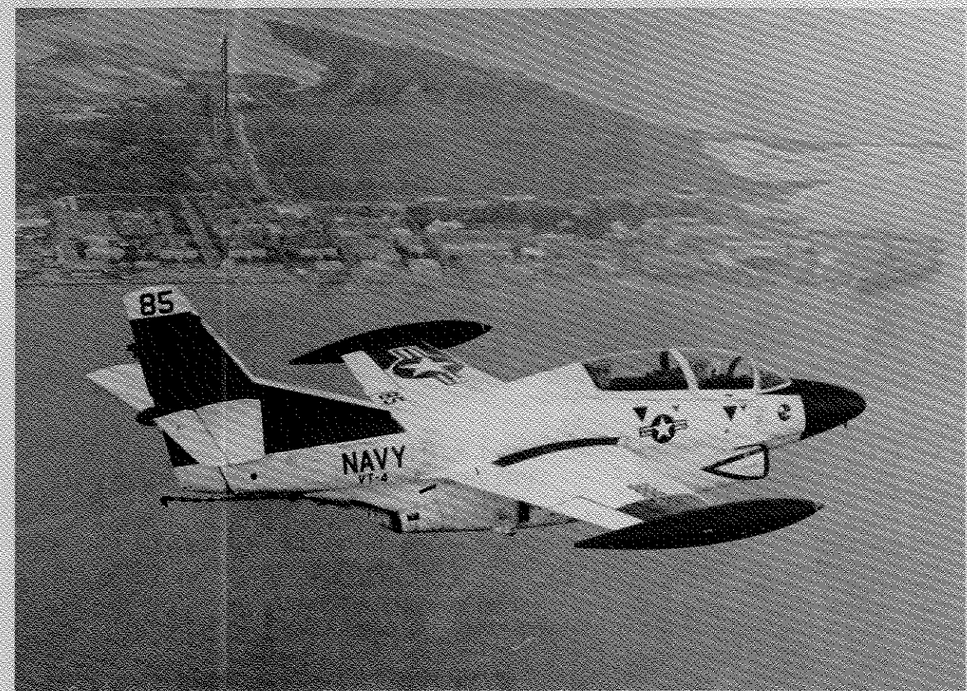

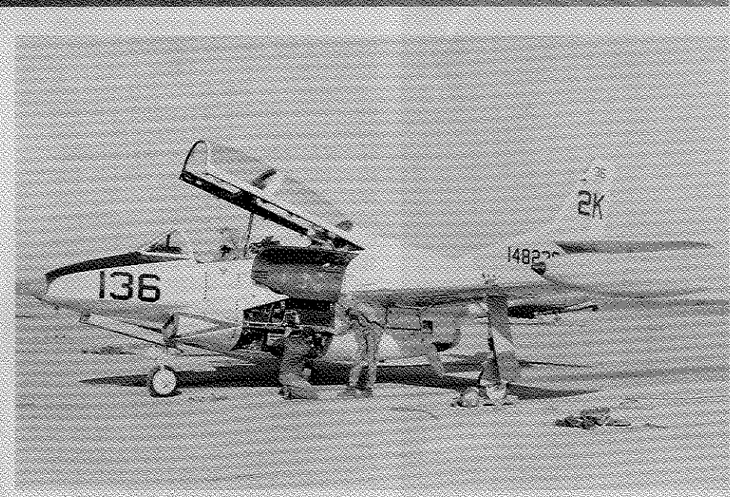

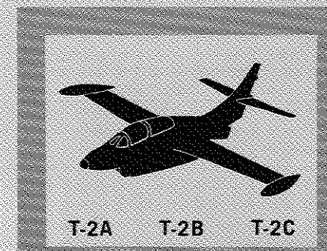
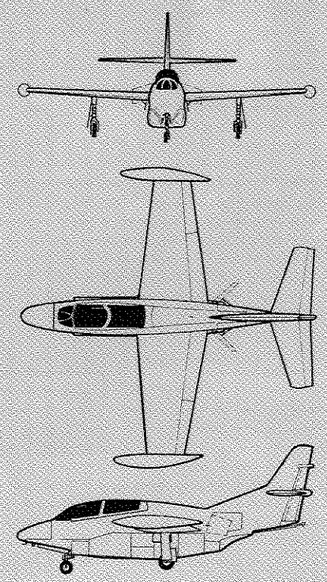
Crew		2
Length		38'4"
Height		14'10"
Wing Span		38'0"
Engine:	T-2A	One J34-WE-48
	T-2B	Two J60-P-6A
	T-2C	Two J85-GE-4
Thrust:	T-2A	3,400 lbs.
	T-2B	3,000 lbs. ea.
	T-2C	2,950 lbs. ea.
Max. Speed:	T-2A	403 kts.
	T-2B	472 kts.
	T-2C	466 kts.
Stall Speed:	T-2A	74 kts.
	T-2B/C	85 kts.
Ceiling:	T-2A	35,100 ft.
	T-2B	42,600 ft.
	T-2C	42,000 ft.
Max. Range:	T-2A	836 nm.
	T-2B	966 nm.
	T-2C	930 nm.