F/A-18E Characteristics*

	F/A-18E	F/A-18C
Wing Area	500 sq ft	400 sq ft
Weight		
Empty	30,000 lb	24,600 lb
Max TOGW	63,500 lb	51,900 lb
Propulsion		
(2) F404 Derivative Turbofan Engine		
Total Thrust (SLSU)	44,000 lb	32,000 lb
Fuel (JP-5)		
Internal	13,900 lb	10,900 lb
External		
330	6,700 lb	6,700 lb
480	9,800 lb	—
Design Load Factor (USN)	7.5 g	7.5 g
% Spotting Factor	119%	100%

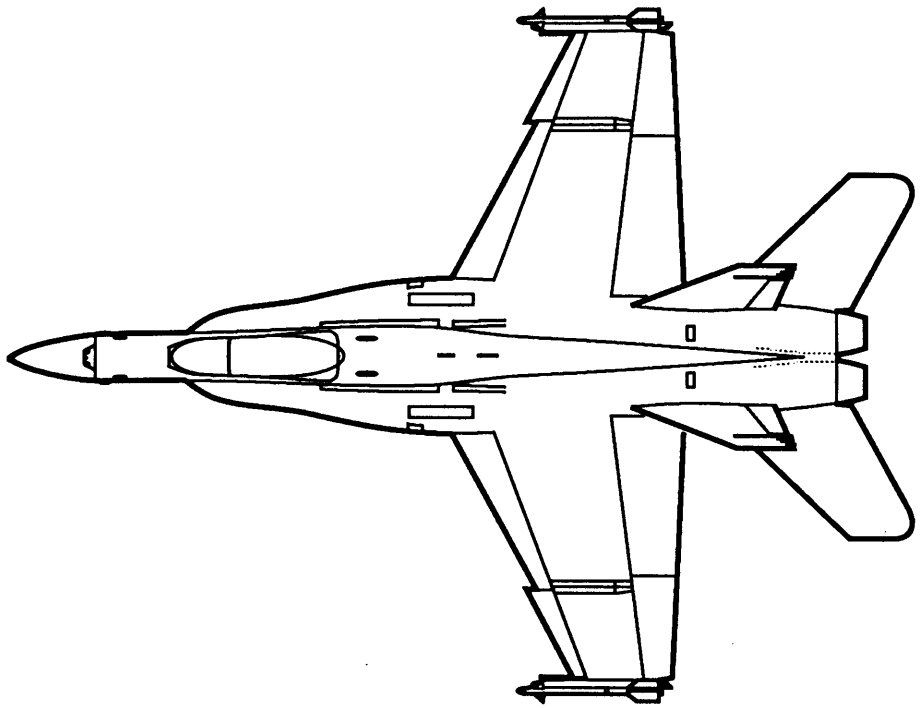

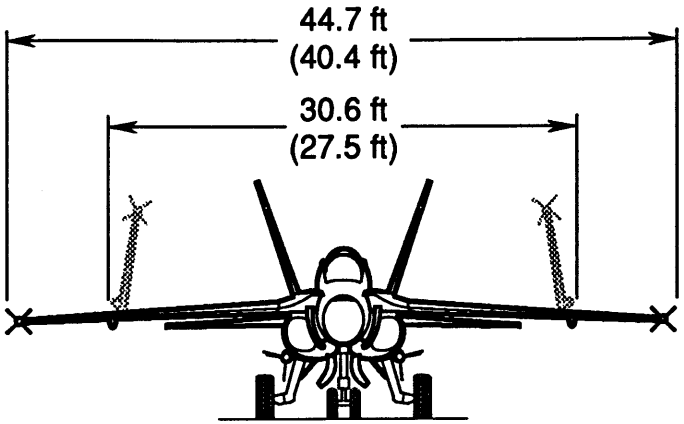

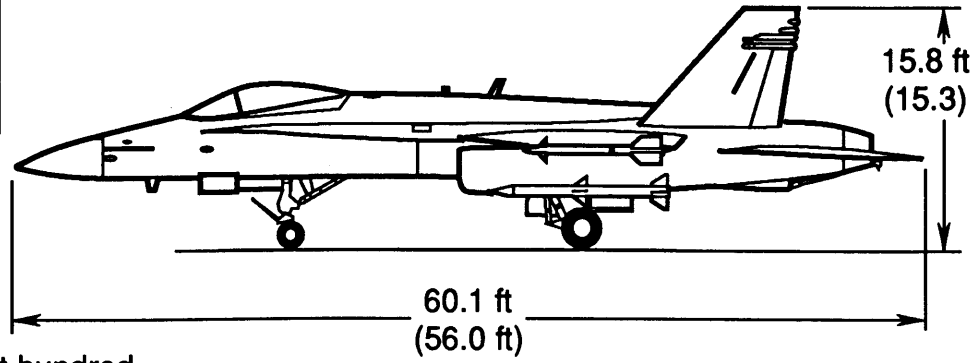

( ) F/A-18C dimensions

* Weights are approximate and rounded to nearest hundred

GP12-0100-8-D/dmb