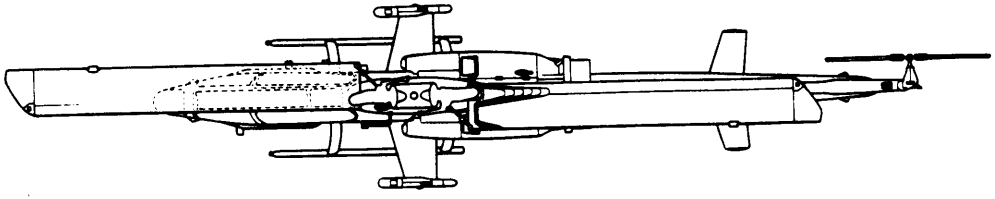

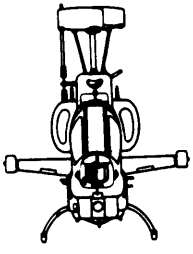

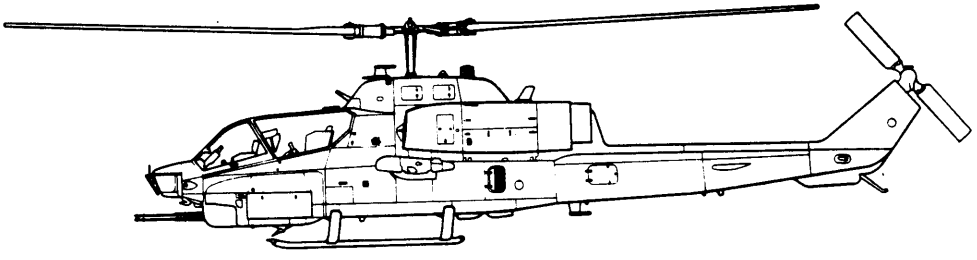
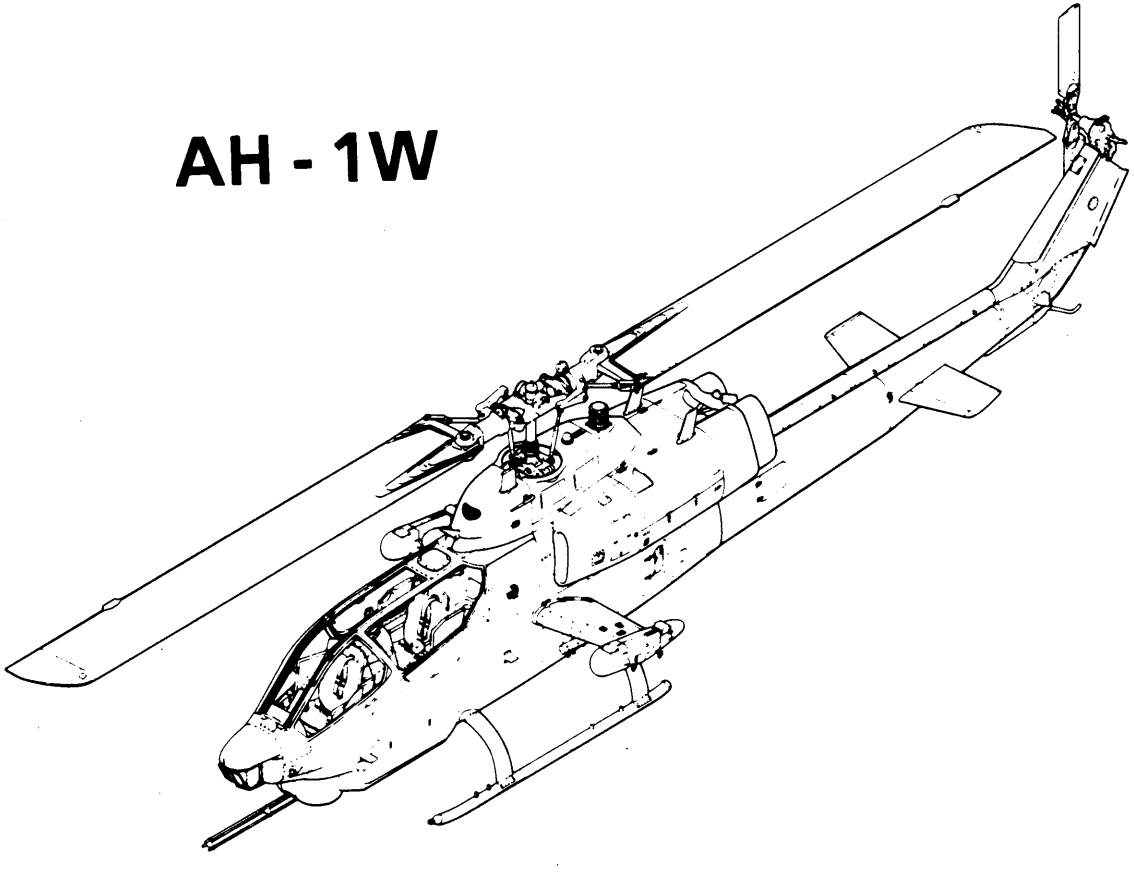
AH - 1W