PAGES

ANE CHARACTERISTICS & PERFORMANCE

BUREAU OF AERONAUTICS, NAVY DEPT.

COLUMN NUMBER		1	2	3	4
LOADING CONDITION		CARGO	STRETCHER BEARER 24 PATIENTS	TRANSPORT 24 TROOPS	FERRY
GROSS WEIGHT	LBS.	33860	32000	33860	33860
EMPTY WEIGHT - Actual -	LBS.	20778			
FUEL / OIL	GALS.	995/55	899/50	995/55	1884/90
FIXED USEFUL LOAD	LBS.	683	1371	683	1104
PAYLOAD	LBS.	6015	4095	6015	0
ENGINE POWER USED FOR PERFORMANCE		NORMAL	NORMAL	NORMAL	NORMAL
WING LOADING	LBS./SQ.FT.	24.2	22.9	24.2	24.2
POWER LOADING ①	LBS./BHP.	16.1	15.2	16.1	16.1
V-MAX. SEA LEVEL	MPH.	176	178	176	176
V-MAX. AIRPLANE CRIT. ALT.	MPH.	189/7400	191/7400	189/7400	189/7400
V-STALL GROSS WEIGHT ②	MPH.	67.8	65.9	67.8	67.8
V-STALL. WITHOUT FUEL ②	MPH.	61.5	60.1	61.5	55.3
TIME-TO-CLIMB -10000 FT.-	MIN.	23.3	19.7	23.3	23.3
TIME-TO-CLIMB -20000 FT.-	MIN.				
SERVICE CEILING	FT.	15600	16900	15600	15600
TAKE-OFF DISTANCE OVER 50 FT. OBST.	FT.	2730	2360	2730	2730
TAKE-OFF DISTANCE -15 KN.-	FT.				
TAKE-OFF DISTANCE -25 KN.-	FT.				
TAKE-OFF TIME	SECONDS				
RATE OF CLIMB -SL-	FT/MIN.	490	580	490	490
MAX. RANGE / V-AV. ③	ST.MI/MPH.	1540/139	1430/129	1540/139	3060/122
RANGE/V-AV -60%NSP ③	ST.MI/MPH	1470/147	1340/149	1470/147	2840/149
BOMBING RADIUS/V-AV -33%R-	NMI/KN.				
PATROL RADIUS/V-AV -20%R-	NMI/KN.				
PATROL RADIUS/V-AV -33%R-	NMI/KN.				
SCOUT RADIUS	N MI.				
COMBAT RADIUS	N MI.				

ENGINE / PROP. GEAR RATIO: 2 R-1830-92/16 to 9

ENGINE RATING BHP/RPM/ALT.	
NORMAL	1050/2550/SL - 7000
TAKE-OFF	1200/2700

NOTES

Engine ratings are AEL ratings. These do not conform to the engine data obtained in the RB-1 flight tests. The flight test data are used in the performance calculations. Range and radius are based on engine requirement fuel consumption data increased by 15% to conform with past experience.

TANKAGE IN GALLONS		OIL	FUEL
FIXED	PROTECTED		
	UNPROTECTED	60	995
	TOTAL-FIXED INTERNAL		
AUX.	DROPPABLE		
	DROPPABLE		
	NOT DROPPABLE	30	995
	TOTAL	90	1990

PAYLOAD:- Cargo, passengers, or baggage.

FIXED USEFUL LOAD:- Crew, trapped fuel & oil, and equipment COMMUNICATING Equipment (375#) included in weight empty.

Performance with one engine inoperative (flaps and landing gear up, propeller feathered) is as follows:
Gross Weight at 100 fpm R. of C. (T.O. power) = 30400 lb.
Gross Weight at 1000 ft. Service Ceiling-(normal power) = 27900 lb.

NOTE

STATUTE MILES USED-EXCEPT-RADIUS IS GIVEN IN NAUTICAL MILES & KNOTS

① BHP AT MAX. CRIT. ALT.

② STALL-WITH POWER

③ AT 1500' ALTITUDE

DECLASSIFIED

[redacted]

SUPERSEDES 1 APRIL 1943

DATE 1 Sept. 1944 PAGE 1

MODEL RB-1

DECLASSIFIED

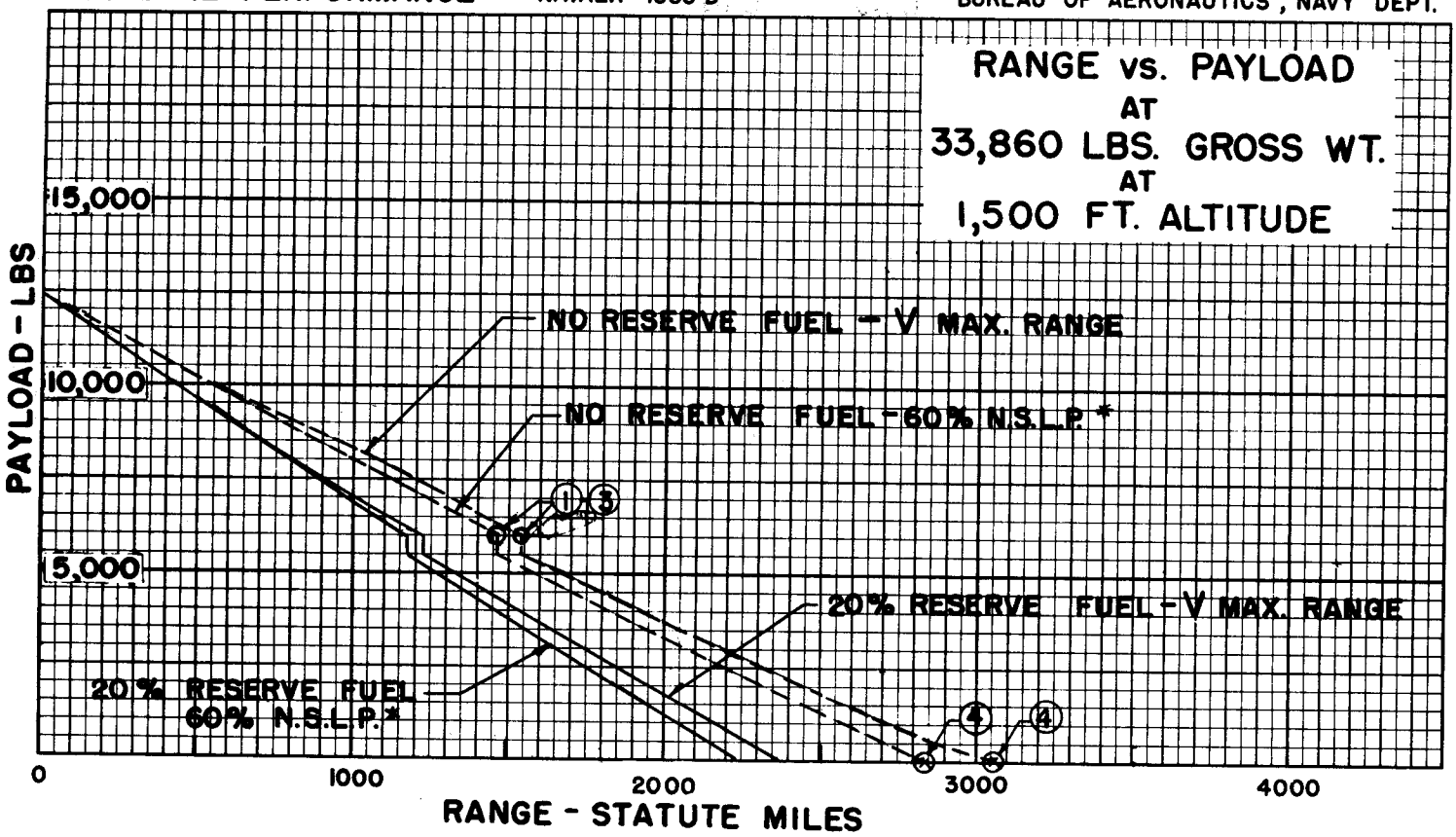

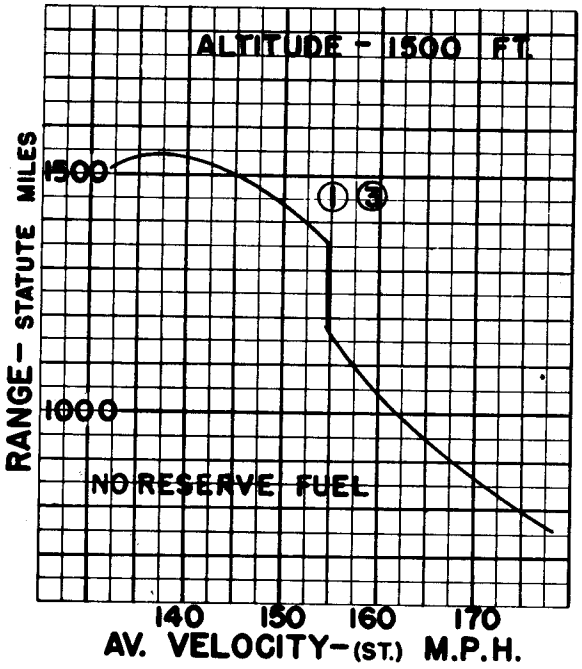

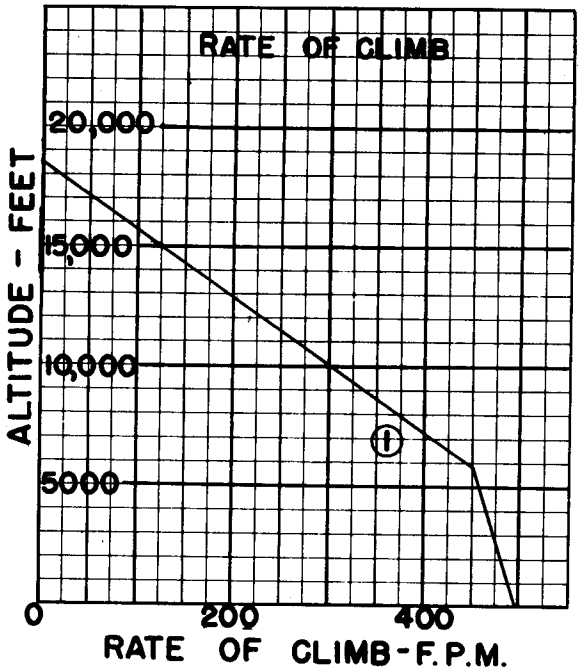

○ LOADING CONDITION COLUMN NUMBER

* NORMAL SEA LEVEL POWER

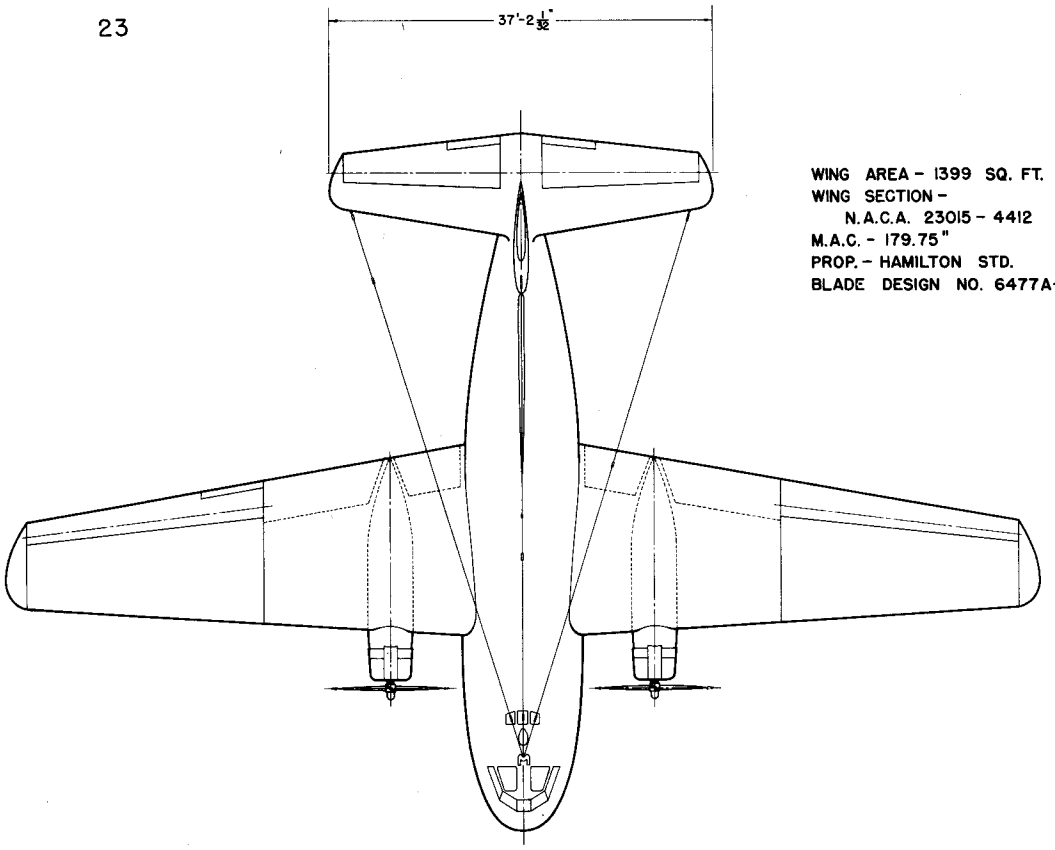

WING AREA - 1399 SQ. FT.
WING SECTION -
N.A.C.A. 23015 - 4412
M.A.C. - 179.75"
PROP. - HAMILTON STD.
BLADE DESIGN NO. 6477A-0

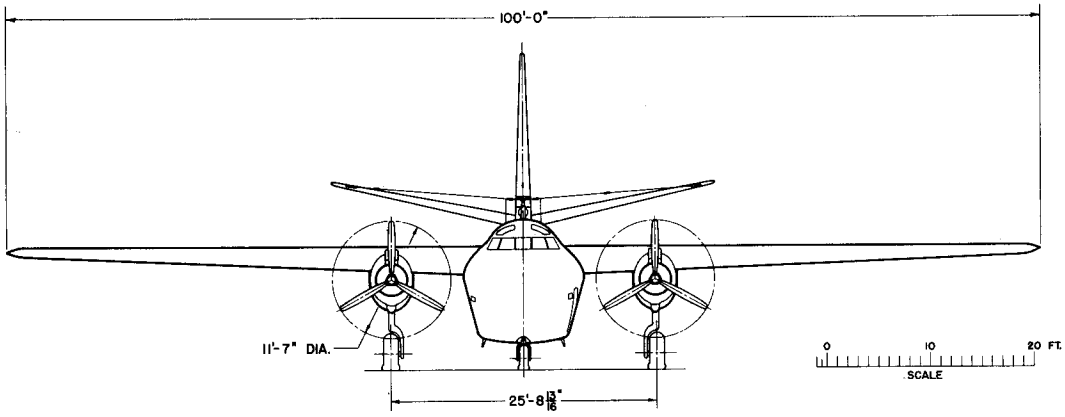

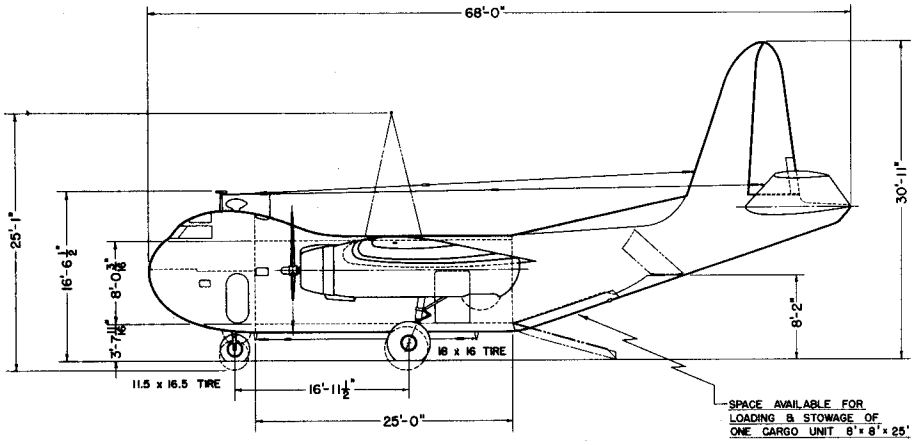

DECLASSIFIED

MODEL - RB-1