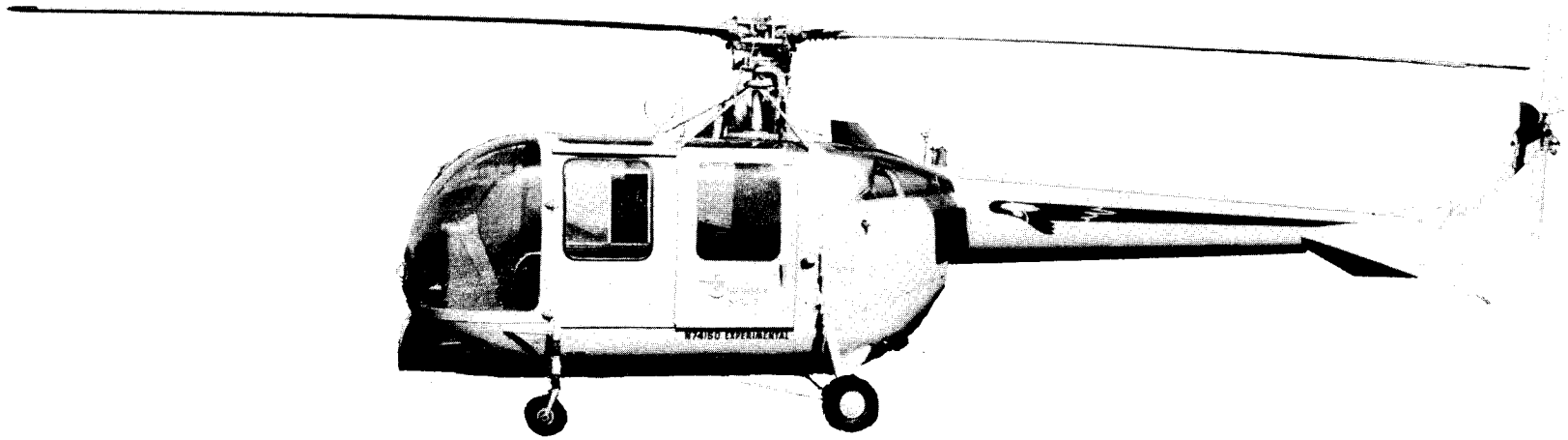

STANDARD AIRCRAFT CHARACTERISTICS

HO5S-1

SIKORSKY

UNCLASSIFIED

17

Standard Aircraft Characteristics NAVAER 1335A (REV. 1-49)

UNCLASSIFIED

BUREAU OF AERONAUTICS
NAVY DEPARMENT

MAIN ROTAR DATA
DISC. AREA – 855.3 SQ. FT.
BLADE AREA EA. 14.18 SQ. FT.
BLADE SECTION-N.A.C.A. .0014
GEAR RATIO 12.9 TO 1.3

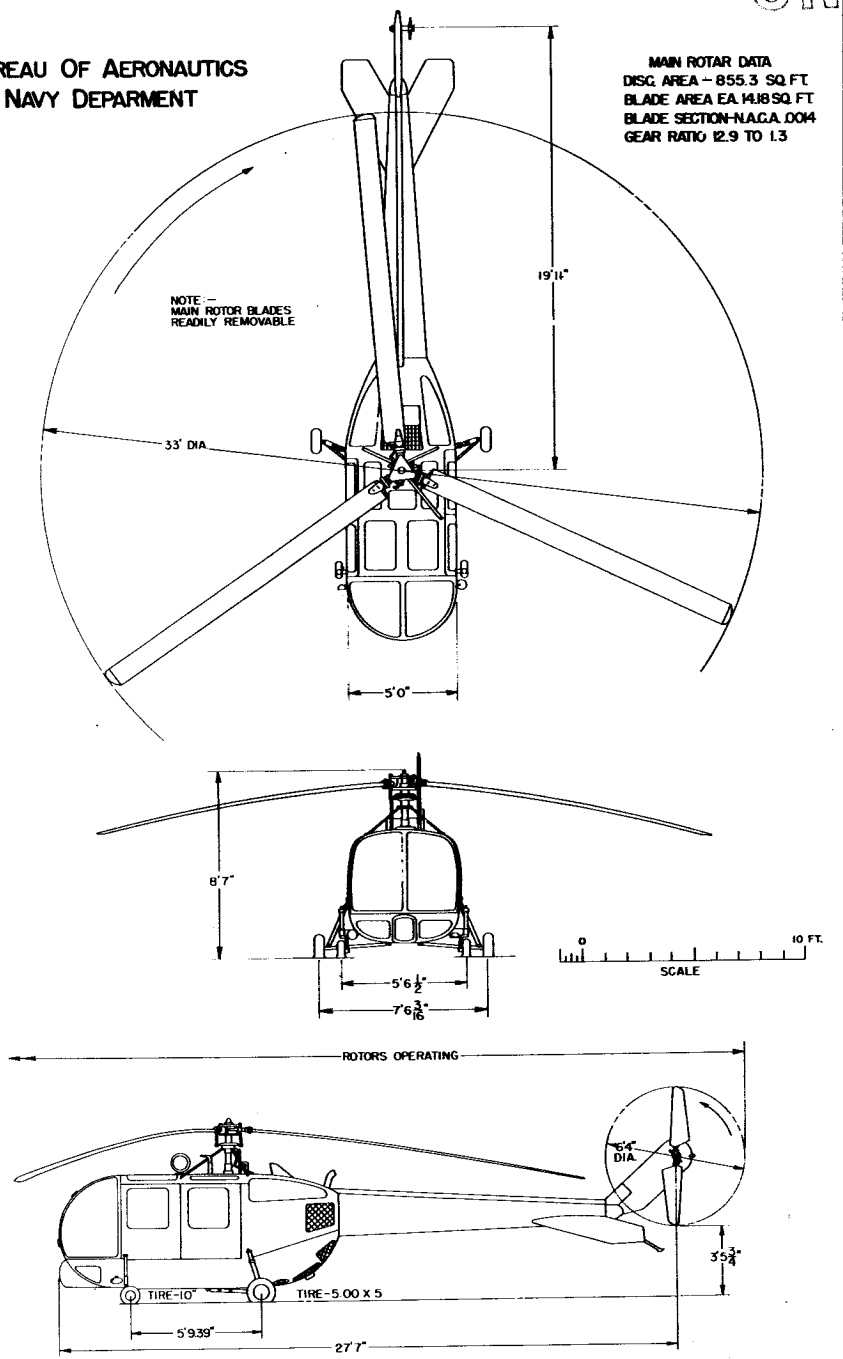

DESCRIPTIVE ARRANGEMENT

BUREAU OF AERONAUTICS
NAVY DEPARMENT

SELF-SEALING TANKS

NON SELF-SEALING TANKS

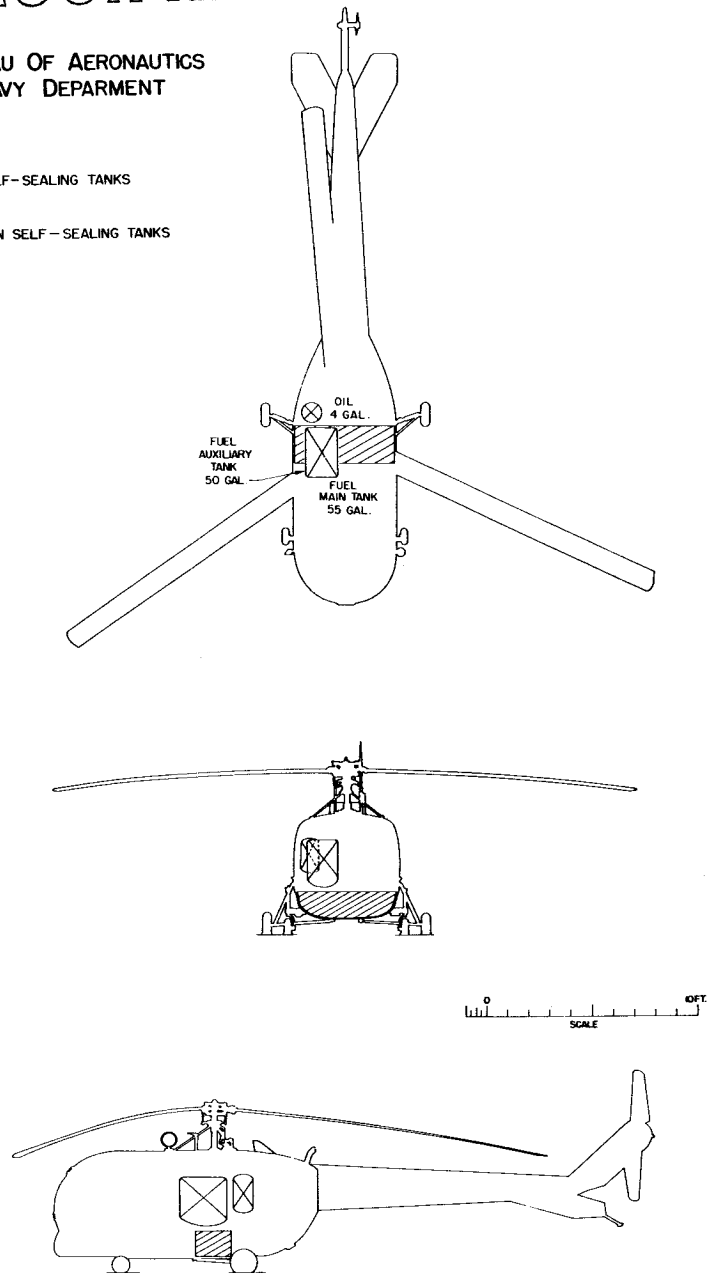

ARMAMENT & TANKS

18

Standard Aircraft Characteristics NAVAER 1335B (REV. 1-49)

MISSION AND DESCRIPTION

The HO5S-1 helicopter will be utilized for observation-liaison purposes. Its missions will include reconnaissance, gunfire adjustment, evacuation of wounded, transport of personnel, and general utility with troop units. For use in evacuating wounded, the co-pilot's seat may be relocated and two litter patients carried internally in addition to the pilot and medical attendant.

The HO5S-1 is the Navy version of the Sikorsky Model S-52-2 and the Air Force YH-18.

Design features include self-sealing fuel and oil tanks, both main and auxiliary rotor blades of all-metal construction, anti-coning blade restrainers for shipboard operation, and non-scuffing quadricycle type landing gear. Provisions are made for FM radio and an external cargo sling of 500 pound capacity.

First flight — August 1951
Service use to start — September 1951

WEIGHTS

Loadings	Lbs.	L.F.
EMPTY	2,002	
BASIC	2,036	
DESIGN	2,570	3.1
MAX.T.O.	2,769	2.88
MAX.LAND	2,769	

All weights are actual.

FUEL AND OIL

Gals.	No. Tanks	Location
55	1	Fuselage

FUEL GRADE.....115/145
FUEL SPEC....MIL-F-5572

OIL

CAPACITY (Gals.).....3
GRADE.....1100
SPEC.....MIL-O-6082

POWER PLANT

NO. & MODEL.....(1) O-425-1
MFR.....Aircooled Motors
ROTOR GEAR RATIO.....0.100
TAIL ROTOR RATIO.....0.143

RATINGS

	Bhp @	Rpm @	Alt.
T. O.	245	3,275	S. L.
NORMAL	245	3,275	S. L.

SPEC. NO. 13707

ACCOMMODATIONS

CREW.....2
PASSENGERS.....3
LITTERS.....2

DIMENSIONS

DISC AREA.....855 sq. ft.
BLADE AREA.....43 sq. ft.
BLADE DIA.....33' - 0"
LENGTH.....29' - 0"
HEIGHT.....8' - 8"
TREAD.....7' - 6"

ELECTRONICS

VHF TRANSMITTER...T-23/ARC-5
MHF TRANSMITTER...T-19/ARC-5
MHF RECEIVER.....R-26/ARC-5
VHF RECEIVER.....R-19
RANGE REC. & LOOP.....R-11A

Provisions only for
FM RADIO.....SCR-619

A

Standard Aircraft Characteristics NAVAER 1335C (REV. 1-49)

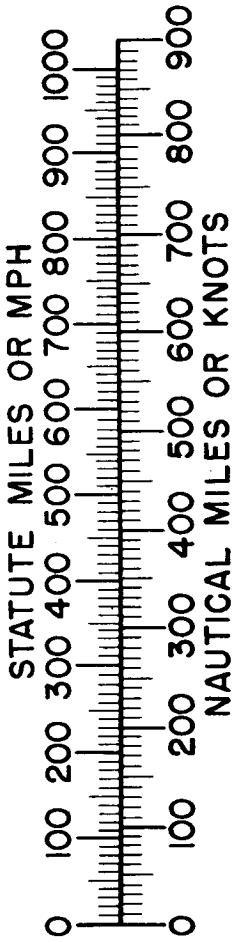

PERFORMANCE SUMMARY

LOADING CONDITION		(1) OBSERVATION 1 Pilot 1 Observer			
TAKE-OFF WEIGHT	lbs.	2,661			
Fuel	lbs.	222			
Pay Load	lbs.	190			
Engine Power	bhp/rpm.	245/3,275			
Disc Loading	lbs./sq.ft.	3.1			
Power Loading	(A) lbs./bhp.	10.9			
Maximum Speed-S.L.	(B) kn.	94			
Maximum Speed/Alt.	(B) kn./ft.	94/S.L.			
Rate of Climb--S.L.	(B) ft./min.	1,110			
Speed for Rate of Climb--S.L.	(B) kn.	45			
Time-to-Climb 5,000 ft.	(B) min.	5.6			
Time-to-Climb 10,000 ft.	(B) min.	16.4			
Service Ceiling	(B) ft.	12,400			
Vertical Rate of Climb--S.L.	(B/C) ft./min.	250/250			
Abs. Hover Ceil. No Grd. Effect	(B/C) ft.	2,100/2,100			
Abs. Hover Ceil. In Grd. Effect	(B/C) ft.	4,100/4,100			
Combat Range/Vav 1,500 ft.	n.mi./kn.	165/78			
Max. Endur./Vav 1,500 ft.	hr./kn.	2.5/46			

20

NOTES

(A) BHP at Maximum Critical Altitude
(B) Normal BHP
(C) Take-Off Power

Performance is based on flight test of the S-52 and YH-18 helicopters.

Performance in ground effect is based on the assumption that the rotor disc is one radius above the ground.

Combat range and maximum endurance are based on engine specification fuel consumption data increased by 5% and allowing fuel for warm-up and take-off (5 min. at NRP) and a 10% fuel reserve. 3,000 RPM is used at all speeds.

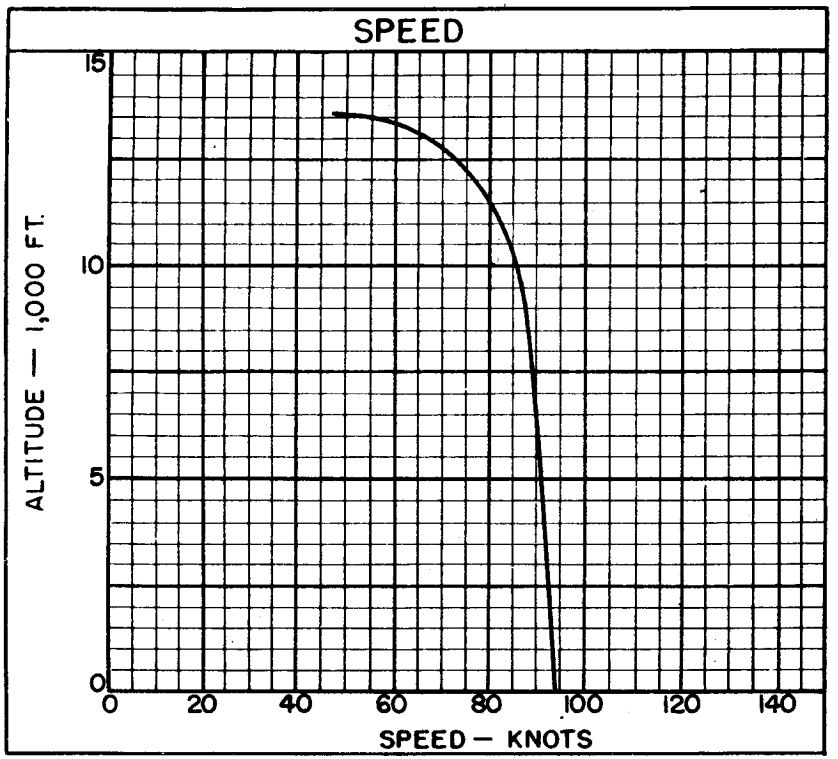

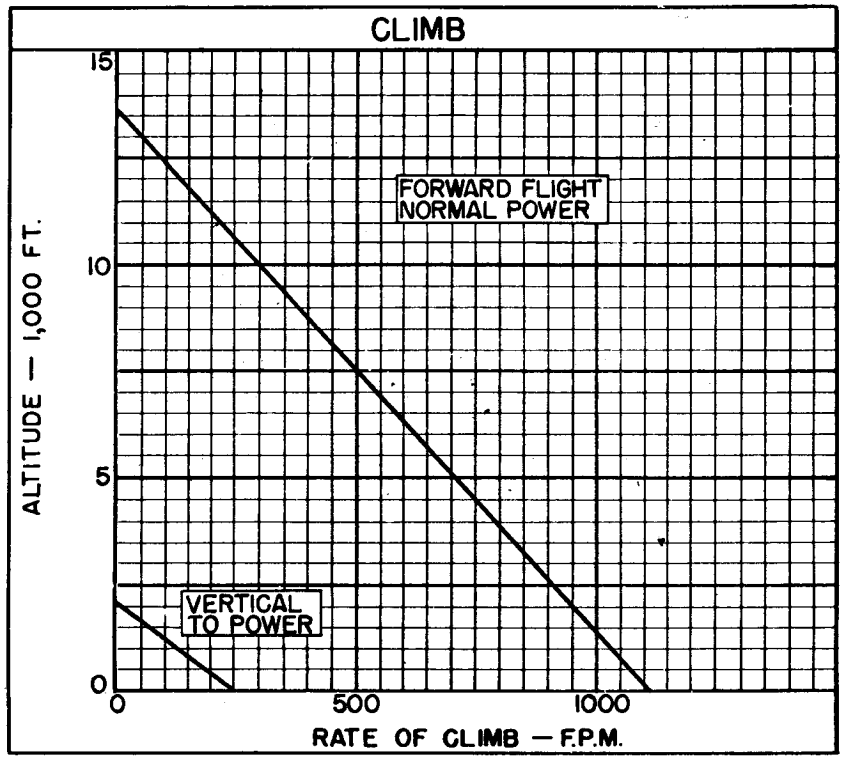

21

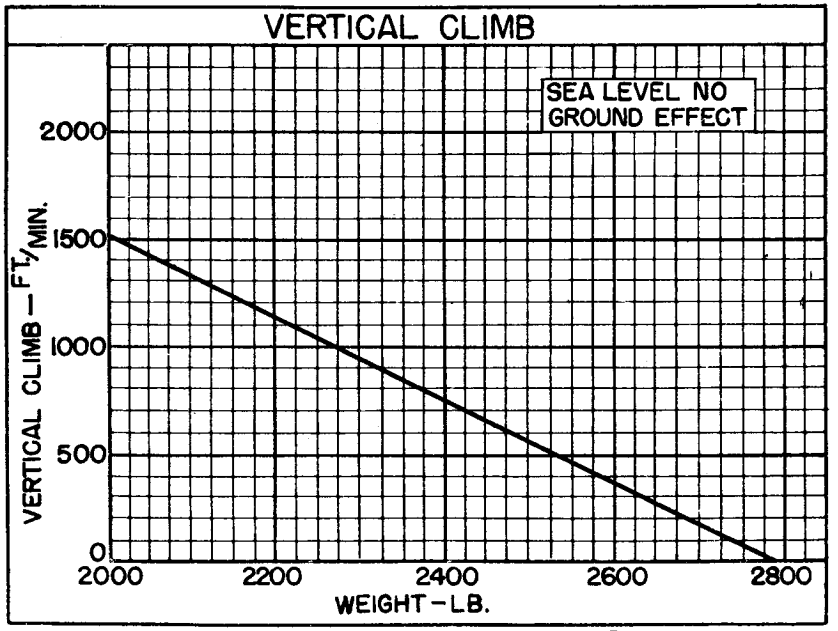

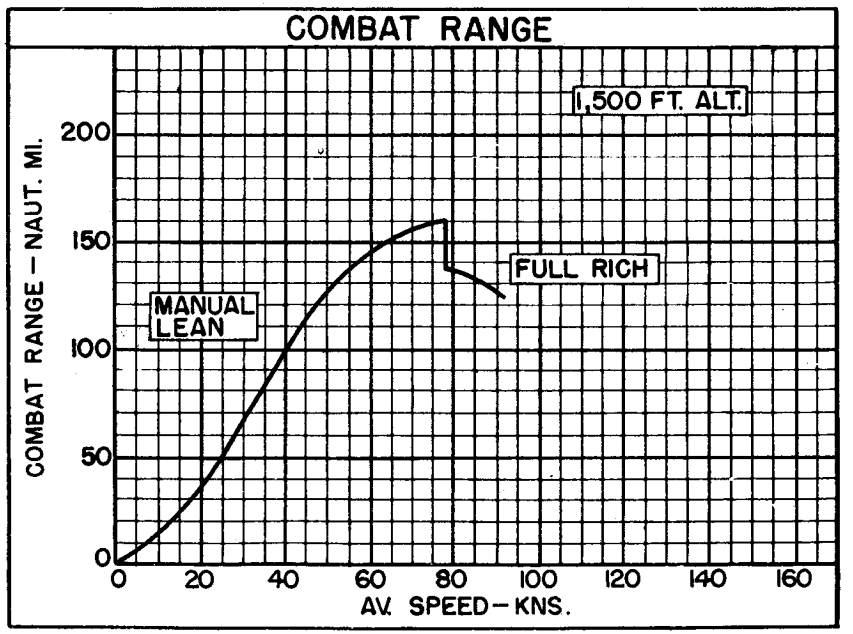

◯ LOADING CONDITION COLUMN NUMBER

Standard Aircraft Characteristics NAVAER 1335E (REV. 2-50)