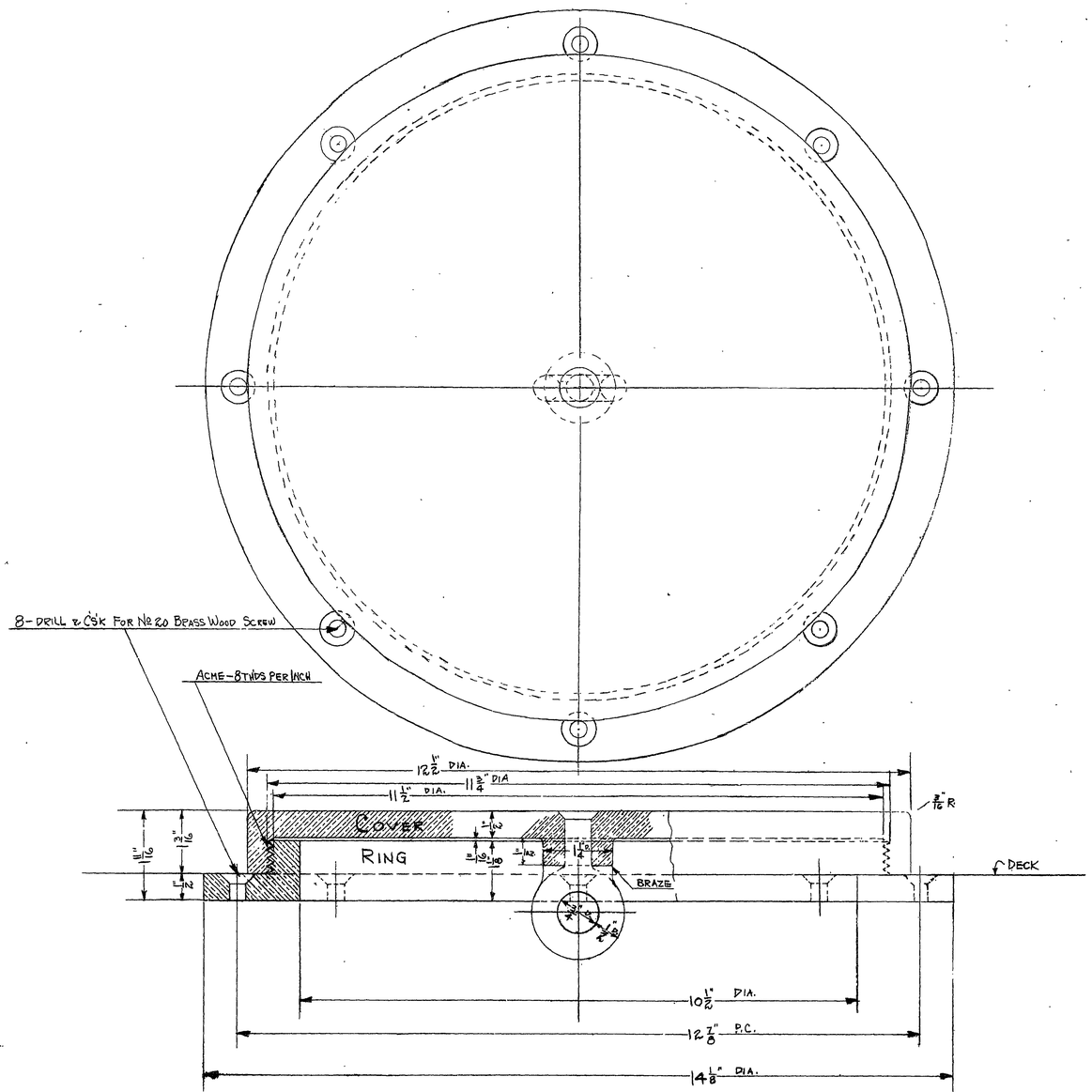

AMMUNITION PASSING SCUTTLE
WATER TIGHT —— MAT'L CAST COMP. NAVAL BRASS
SCALE: FULL SIZE
No. REQ'D — 12 COVERS —— 12 RINGS

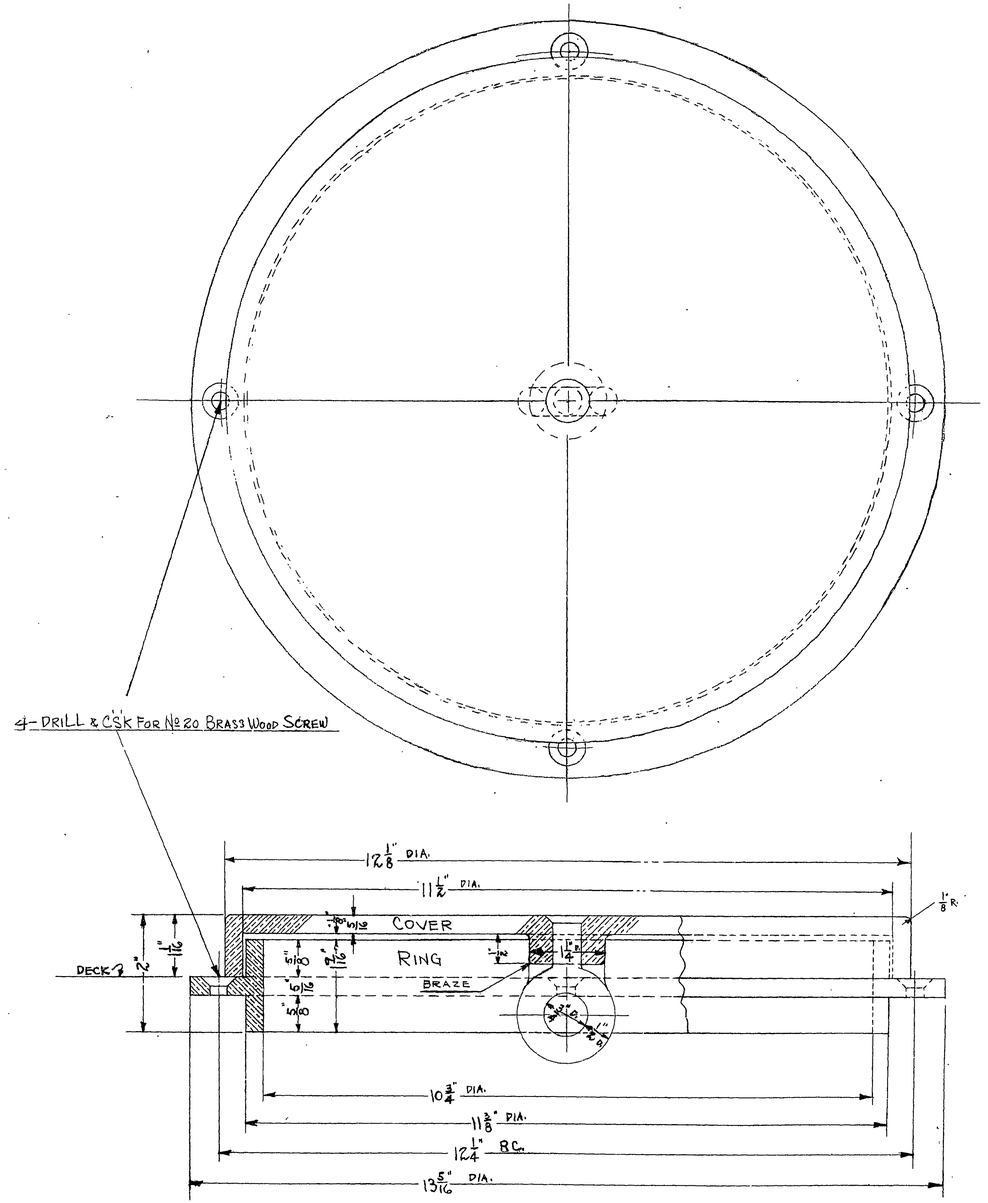

AMMUNITION PASSING SCUTTLE
NON WATER TIGHT — MAT'L CAST COMP. NAVAL BRASS
SCALE: FULL SIZE
No. REQ'D — ONE RING ONLY.

IN CHARGE OF WORK: JOHN A. LORD, LIEUT. (C.C.) U.S.N.
DRAWN BY: McCumber
TRACED BY: McCumber

RESTORATION

U.S. FRIGATE

AMMUNITION PASSI

FOR SPAR, GUN AN

NAVY YARD, BOSTON

SCALE: FULL SIZE

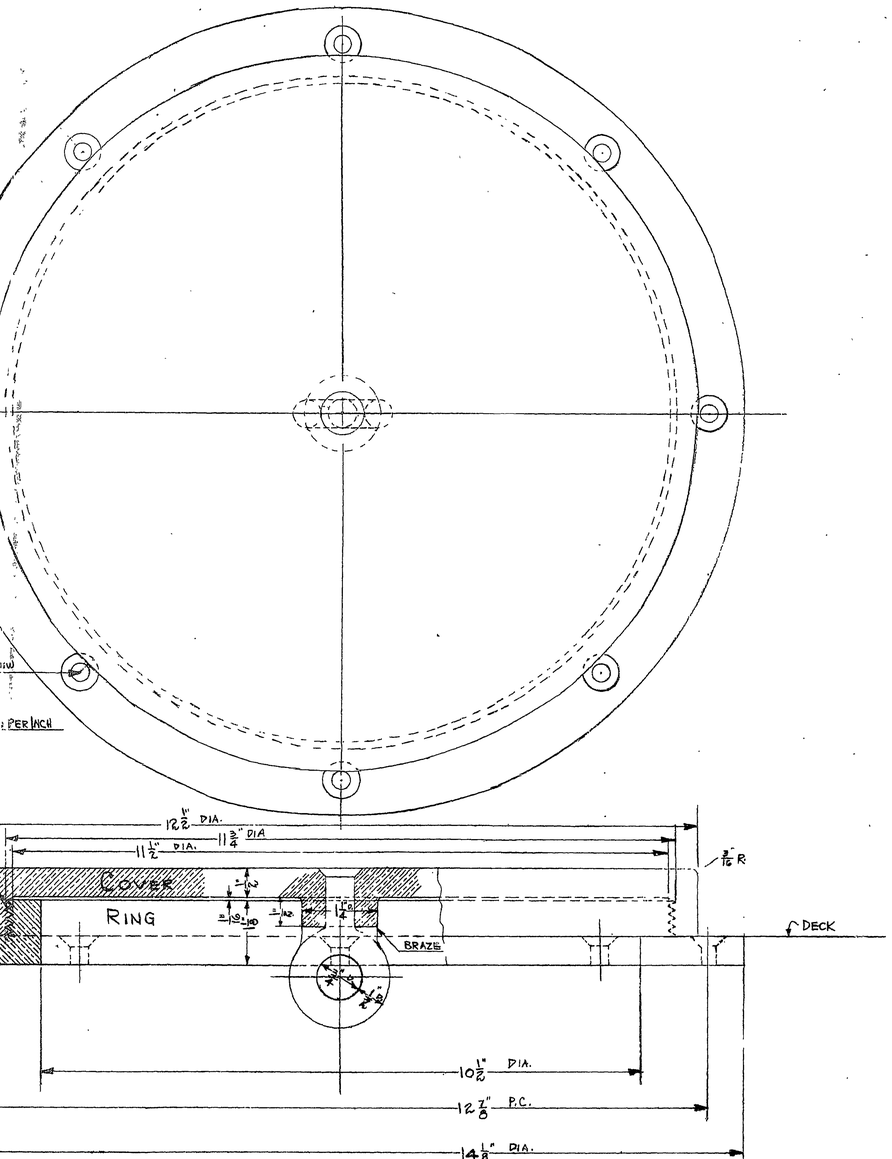

AMMUNITION PASSING SCUTTLE
WATER TIGHT —— MAT'L CAST COMP. NAVAL BRASS
SCALE: FULL SIZE
No. REQ'D — 12 COVERS —— 12 RINGS

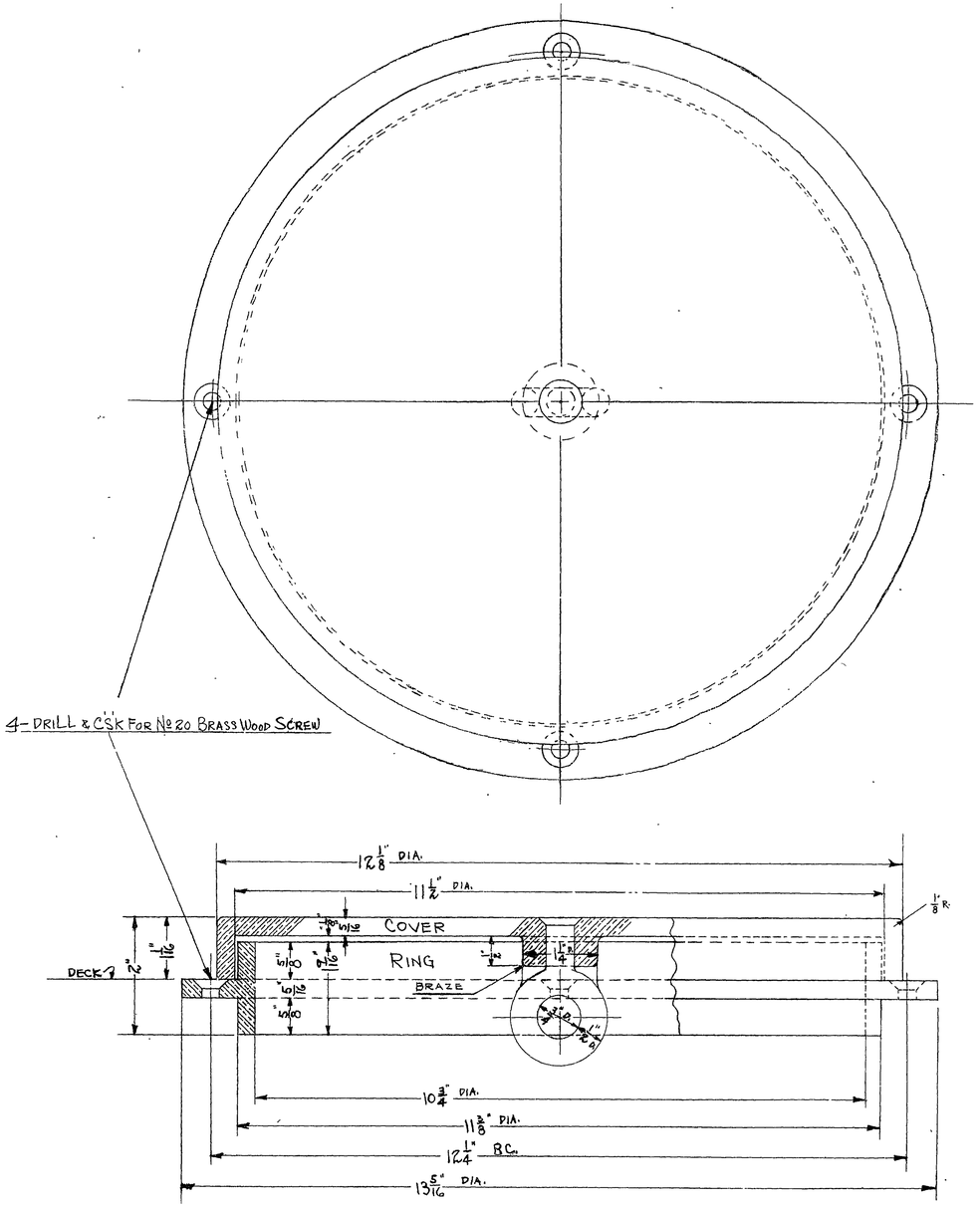

AMMUNITION PASSING SCUTTLE
NON WATER TIGHT — MAT'L CAST COMP. NAVAL BRASS
SCALE: FULL SIZE
No. REQ'D — ONE RING ONLY.

RESTORATION 1927

U.S. FRIGATE CONSTITUTION
AMMUNITION PASSING SCUTTLE FITTINGS
FOR SPAR, GUN AND BERTH DECKS

NAVY YARD, BOSTON
SCALE: FULL SIZE

JAN. 1930

APPROVED FOR MANAGER
John A. Lord
LIEUT. (C.C.) U.S.N.
SUP'T OF RESTORATION.

No. 80727