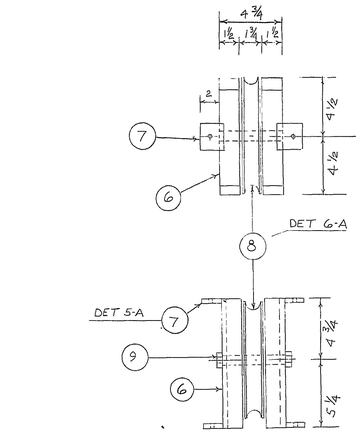

DET 4-B
SCALE: 3"=1'-0"

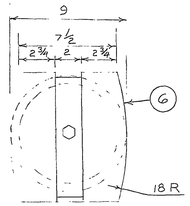

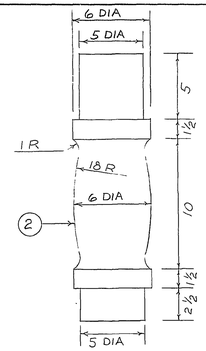

DET 3-D
SCALE: 3"=1'-0"

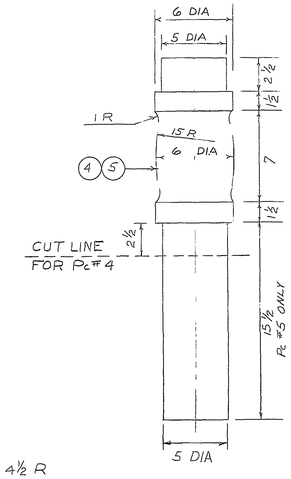

DET 3-E
SCALE: 3"=1'-0"

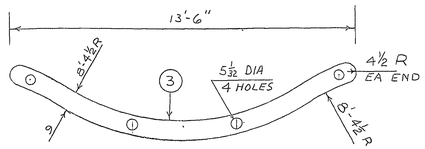

PLAN 3-C
SCALE: 1/2"=1'-0"

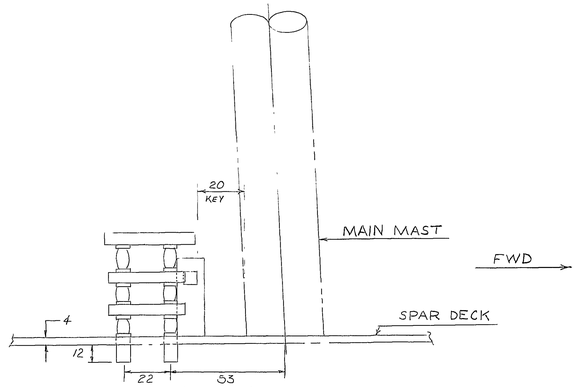

ELEV 2-B
SCALE: 1/2"=1'-0"

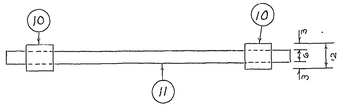

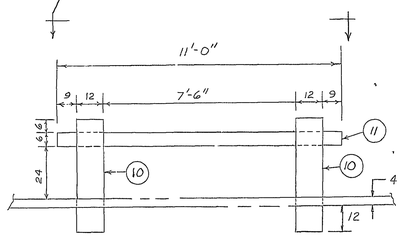

ELEV 4-A
SCALE: 1/2"=1'-0"

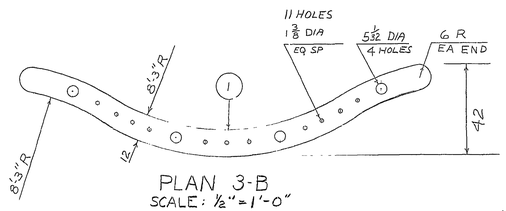

PLAN 3-B
SCALE: 1/2"=1'-0"

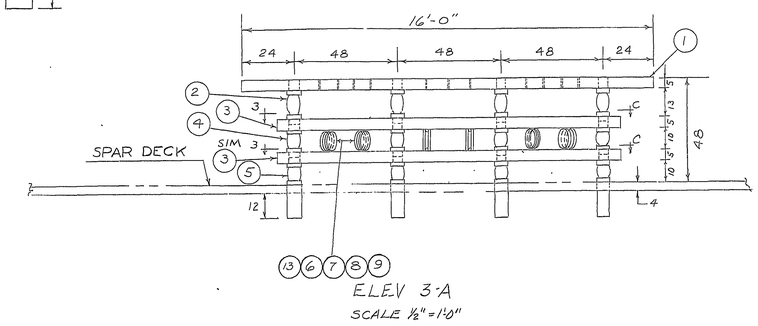

ELEV 3-A
SCALE 1/2"=1'-0"

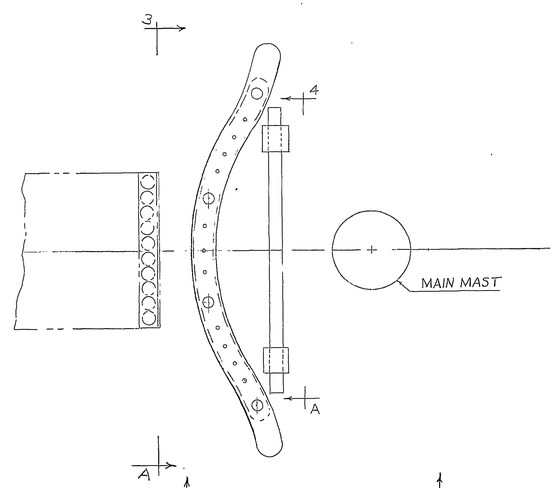

KEY PLAN
MAIN MAST FIFE RAIL
SCALE: 1/2"=1'-0"

WEIGHT AND MOMENT FOR MATERIAL SHOWN ON THIS DRAWING (TOTALS BY WEIGHT GROUP)

REV	ADD OR DEDUCT	WEIGHT GROUP	WEIGHT (LBS)	VERTICAL LEVER (FT)	VERTICAL MOMENT (FT LBS)	LONGITUDINAL LEVER (FT)	F/A	LONGITUDINAL MOMENT (FT LBS)	TRANSVERSE LEVER (FT)	P/S	TRANSVERSE MOMENT (FT LBS)
A											

REVISIONS

REV	ZONE	DESCRIPTION	BY	DATE	APPD
A		APPROVAL SIGNATURE ADDED AT ISSUE		7/24/72	

FOR LIST OF MATERIAL SEE SHEET NO. 3

"THIS DRAWING WAS DEVELOPED IN ACCORDANCE WITH THE LATEST ISSUES OF THE STANDARDS LISTED IN MIL-D-1000 AND INCLUDES THE STANDARDS DESIGNATED IN THE A-B-C NAVAL TRIPARTITE STANDARDIZATION AGREEMENTS: ONM INSTRUCTIONS 5711.34 OF 20 DECEMBER 1962 AND NAVMAT INSTRUCTION 5711.36A OF 14 AUG. 67

* DRAWINGS, SO MARKED, ARE AFFECTED BY THIS DRAWING, AND SHIP PLAN INDICES SHOULD SO STATE.

NO.	TITLE	NAVSEA DWG NO.

REFERENCES

AUTH:

IX 21	USS CONSTITUTION

SHIP IDENT. NO & NAME

PORTSMOUTH NAVAL SHIPYARD

BOSTON PLANNING GROUP
BOSTON, MASS

EXAMINED

CODE 2050.2		EXT 365
BRANCH HD	Johnson	
CHECKED	[illegible]	
DRAWN	CLANCY	
APPD FOR DESIGN DIV	[illegible]	3/29/72
APPD (OTHER THAN DESIGN DIV)		

FIFE RAIL MODS
MAIN & MIZZEN MASTS

H	80060/IX21	600	NAVSEA DWG NO 4649805	REV A
SCALE	AS SHOWN		SHEET 1 OF 3	

PRELIMINARY

NO.	RESERVATION	ESTIMATED RELEASE DATE

PROJECT
JOB ORDER NO. 23021 50301

IS-DES
DATE 3/29/72
REVISION A
FWE
SH SUPT
SHIP
NAVSEA SYSCOM
PORTSMOUTH
PHILADELPHIA
NORFOLK
CHARLESTON
LONG BEACH
MARE ISLAND
HUNTERS PT.
PEARL HARBOR
SUPT HP
SPCL MECH
ESO. FLAKES
U.S.C.
CODE 2050.2 2

0-15'
Fire in
1X21 Conf. Vo

MICROFILM