LIST OF MATERIAL

PC NO	DESCRIPTION	AMT REQD	SPEC	LAST NO USED	MATERIAL	REMARKS
1	LAMINATED WHITE OAK	2	MIL-W-15154	2	WOOD	18"x18"x16'-10" LG
2		2		2		20½"x25"x13'-3" LG
3		2		2		20½"x25"x13'-3" LG
4		8		3		DIMENSION
5		8		—		2½"x14"x48" LG
6	1¼ DIA ROD GALV	70 FT	MIL-S-20166	3	MED STEEL	CUT TO SUIT
7	1"	50 FT		3		
8	¾	10 FT		2		
9	¾	16		—		DRIFT PIN 15" LONG

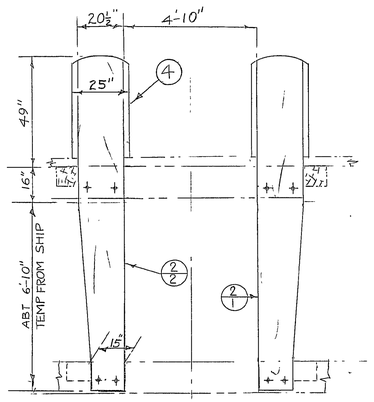

FWD MOORING CHAIN BITTS

SECT "4-C"

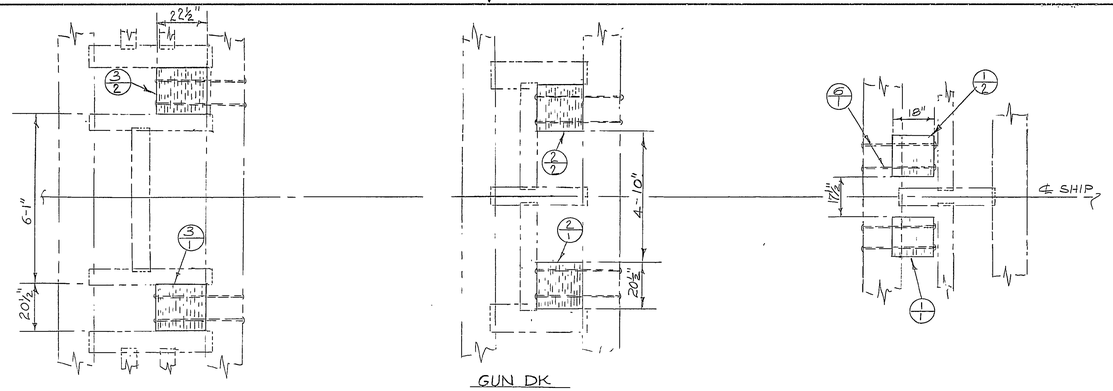

GUN DK

PLAN 2-C

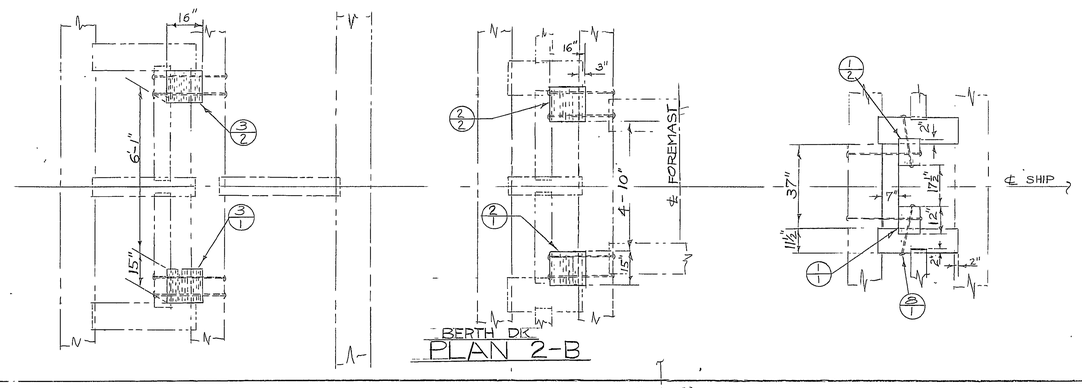

BERTH DK

PLAN 2-B

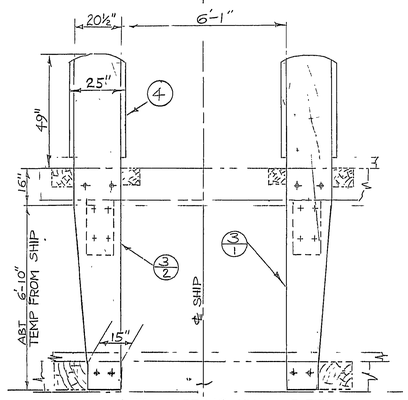

AFT MOORING CHAIN BITTS

SECT 4-B

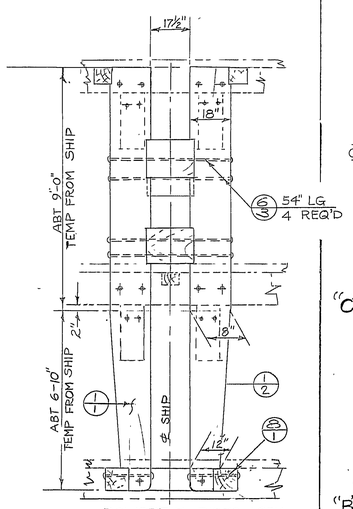

BOWSPRIT BITTS ASSY

SECT 4-A

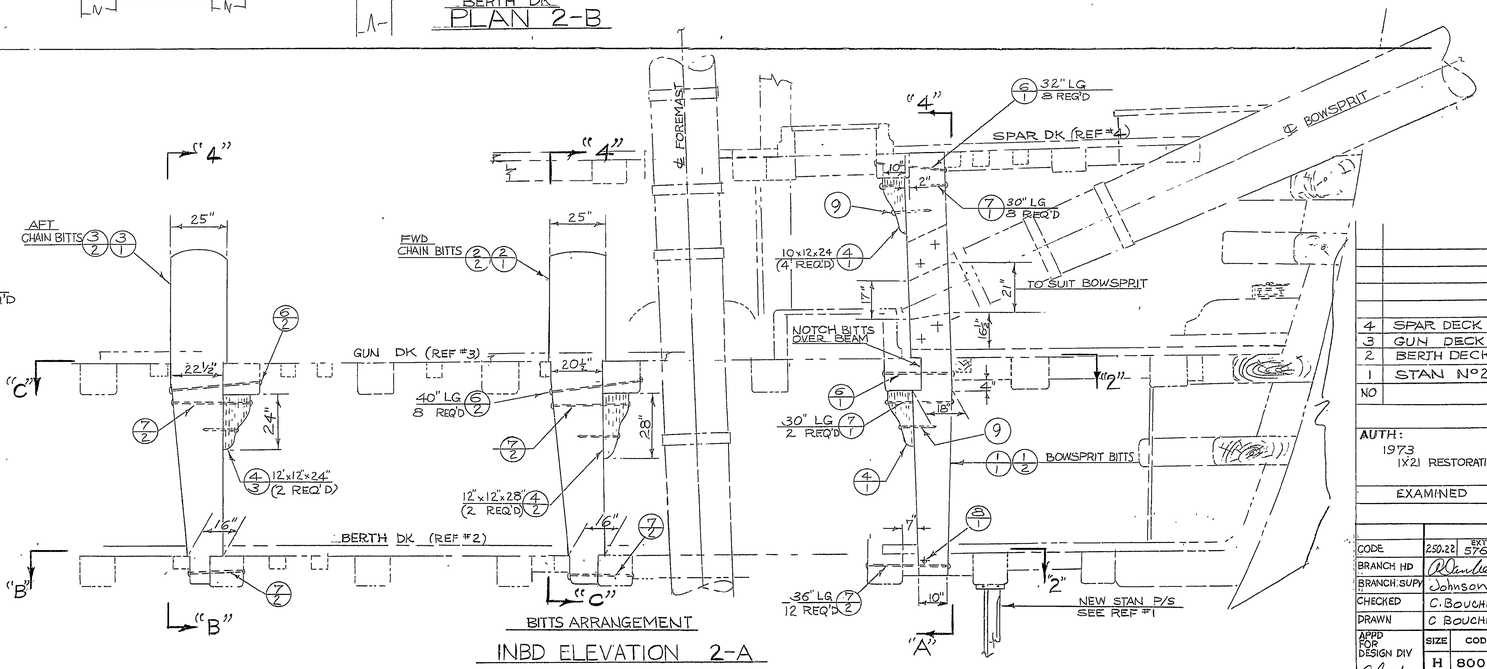

BITTS ARRANGEMENT

INBD ELEVATION 2-A

NO	TITLE	DWG NO
4	SPAR DECK PLANK REMOVED	B.N.S 17636
3	GUN DECK PLANK REMOVED	B.N.S Nº 15644
2	BERTH DECK PLANK REMOVED	B.N.S Nº 18285
1	STAN Nº2 BEAM BERTH DK	1X21-101-4520782

REFERENCES

AUTH: 1973 1X21 RESTORATION

1X21 USS CONSTITUTION

SHIP IDENT. NO & NAME

EXAMINED

BOSTON NAVAL SHIPYARD
BOSTON, MASS 02129

CODE	250.22	EXT 576
BRANCH HD	[signature]	
BRANCH SUPV	Johnson	
CHECKED	C. BOUCHER	
DRAWN	C BOUCHER	
APPD FOR DESIGN DIV	[signature]	

BITTS
BOWSPRIT BITT
MOORING CHAIN BITT
ARR & DET

SIZE	CODE IDENT. NO.	NAVSHIPS DWG. NO.	REV
H	80060/1X21	600 4520781	A

SCALE: 3-1-74 SHEET 1 OF 1