PROCEDURE

"GRADE A" DOUGLAS FIR

LAMINATED BEAMS AND TEST SHALL CONFORM TO MILITARY SPECIFICATION MIL-W-2038-C AND AMENDMENT 2 DATED NOVEMBER 1968.

(a) PRESSURE OF ABOUT 150 P.S.I. TO OBTAIN A GLUE LINE OF .005±.002

(b) CURING TIME 8 TO 10 HOURS AT A TEMPERATURE OF 70° TO 75°F.

(c) SCARF CLAMP ASSEMBLY SEE REF. #4.

(d) TEST SHALL BE CONDUCTED TO DETERMINE THE SHEAR, BENDING STRESS AND FAILING POINT OF GLUE LINE. SEE REF #5 & #6 FOR TEST RESULTS.

D WHITE OAK

LAMINATED BEAM SHALL CONFORM TO MILITARY SPECIFICATION MIL-W-15154-D

LIST OF MATERIAL

1. WOOD SHALL BE CLEAR OF KNOTS, (DOUGLAS FIR COAST TYPE) MOISTURE CONTENT 8-15 PERCENT.
2. ADHESIVE SHALL BE EQUAL TO THE PRODUCT BY KOPPERS CO INC. PITTSBURG PENNSYLVANIA.
   (a) PENACOLITE ADHESIVE G-1260-A SOLUTION OF A PARTIALLY CONDENSED PHENOL-RESORCINOL-FORMALDEHYDE.
   (b) G-1260-B A POWDER COMPRISING PARAFORMALDEHYDE AND WALNUT SHELL FLOUR.

THIS ADHESIVE CONFORMS TO MIL-A-22397.

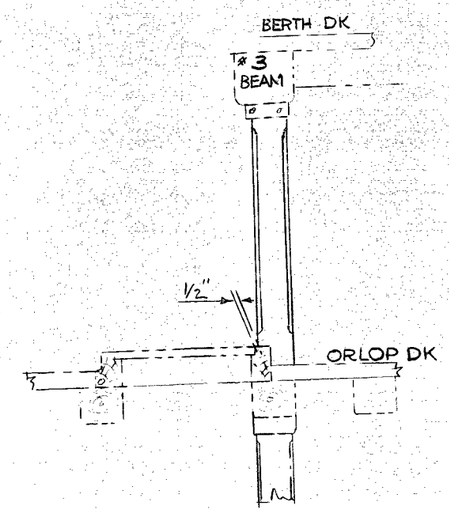

D DET 4-A (SEE EL "2-A")
SC: 1/2"=1'-0"

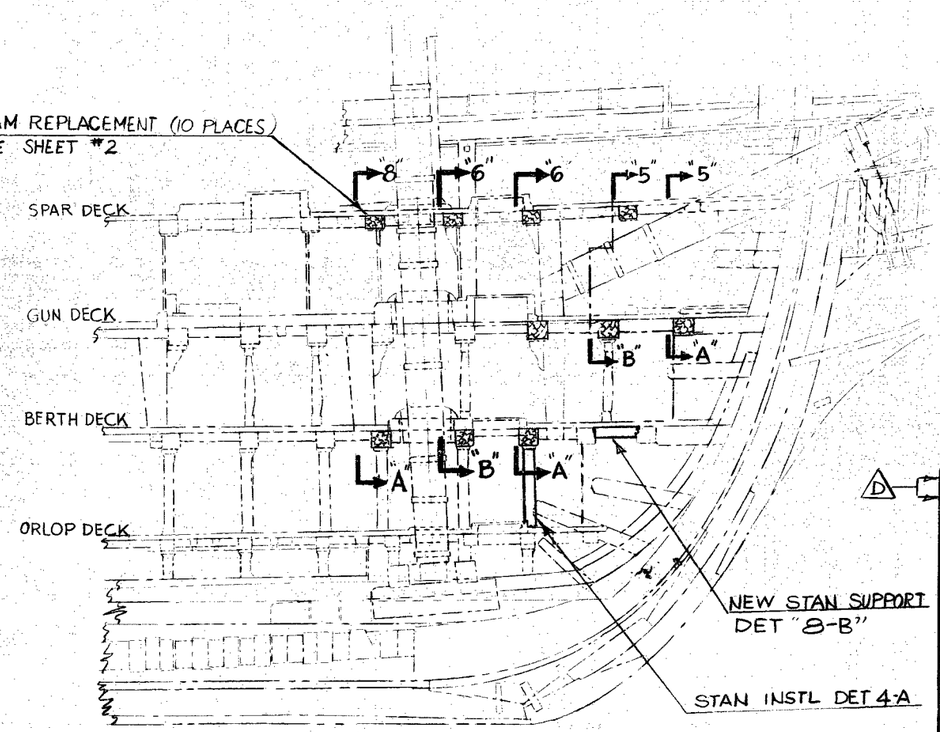

ELEVATION "2-A"
BOW INBOARD PROFILE C

REVISIONS

REV	ZONE	DESCRIPTION	BY	DATE	APPD
A		APPROVAL SIGNATURE ADDED		5/22/73	
B		AUTH: DESIGN DEVELOPMENT. BEAMS DET. A-A & DET. B-B MUST BE LAMINATED IN SHOP. ADDED SHEET #2 OF 2.	CB / J.S.	6/22/73	CB
C	2' SHT 2, 10'	AUTH: DESIGN CHANGES TO CONFORM WITH EXISTING MAT'L READILY AVAILABLE. ADDED EL 2-A, SHEET 2 OF 2 CHANGED TO 2 OF 3 AND INDICATED ALL SPAR DECK BEAM REPLACEMENTS. ADDED SHEET 3 OF 3. CHANGED 1/2 DIA CARRIAGE BOLT TO 3/4 IN DET 10-B. DELETED DET A-A & B-B.	CB / J.S.	7/25/73	CB
D	1½, 4½, 5½, 6½, 8½	AUTH: DESIGN DEVELOPMENT SIMPLIFIED THE BEAMS INSTL BY REDUCING THE AMOUNT OF SCARF IN EACH BEAM FROM TWO TO ONE CENTER-LINE SCARF AS INDICATED IN SEC 5-8, 6-A, 6-B, AND 8-A. ADDED REF #5, #6, & NOTE IN PANEL #4. ADDED DET 8-B.	FJ / CB	11/9/73	

NO.	TITLE	DWG. NO.
6	DK BEAM SCARF BENDING TEST	1X21-610-4520347
5	SHEARING TOOL FOR WOOD TEST	1X21-610-4520312
4	CLAMPING DEVICE FOR SCARF	NAVSHIPS NO. 1X21-000-4519748
3	BERTH DK DECKING REMOVED	BNS NO. 18285
2	GUN DK DECKING REMOVED	BNS NO. 15644
1	SPAR DK DECKING REMOVED	BNS NO. 17636

REFERENCES

AUTH: (1X21) 1973 RESTORATION

1X21 U.S.S. CONSTITUTION
SHIP IDENT. NO. & NAME

EXAMINED

		EXT.
CODE	250-22	576
BRANCH HD		
SECT SUP		
CHECKED	C. BOUCHER	
DRAWN	J. SCHATZ	
APP'D FOR DESIGN DIV.	5-22-73	
APP'D (OTHER THAN DESIGN DIV.)		

BOSTON NAVAL SHIPYARD
BOSTON, MASS. 02129

DECK BEAM LAMINATED
SPAR, GUN & BERTH DK

SIZE	CODE IDENT. NO.	NAVSHIPS DWG. NO.	REV.
L	80060/1X21	1014519747	D

SCALE: AS NOTED SHEET 1 OF 3

1X21-4519747

4519747 SH 1

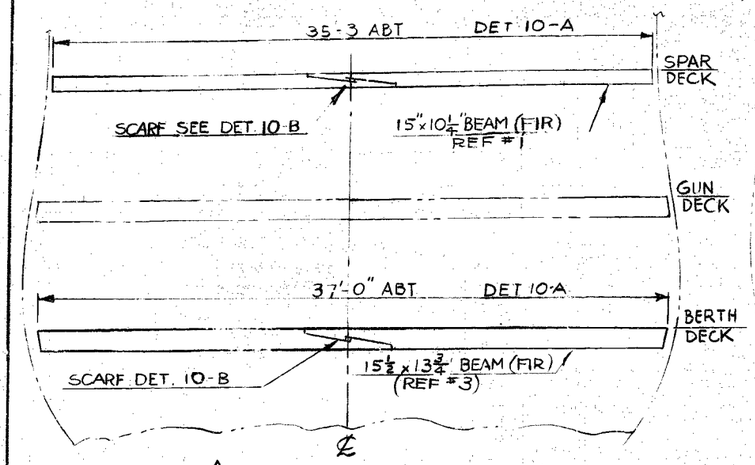

D SECT. "8-A"
BEAM #5
SCALE: 3/16 = 1'-0"

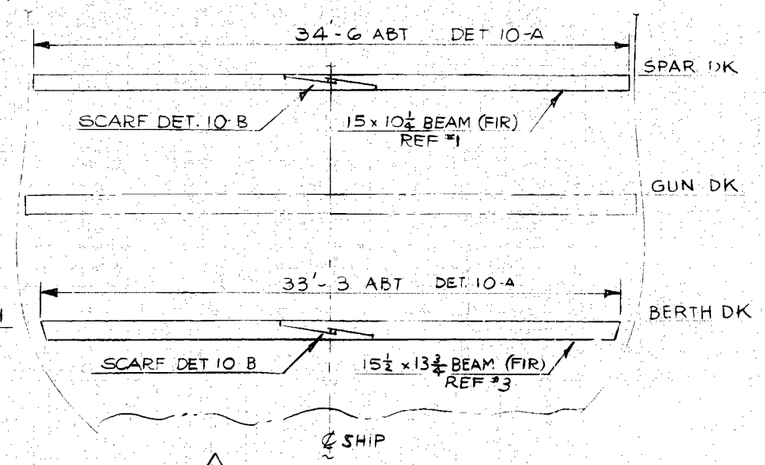

D SECT. "6-B"
BEAM #4
SCALE: 3/16 = 1'-0

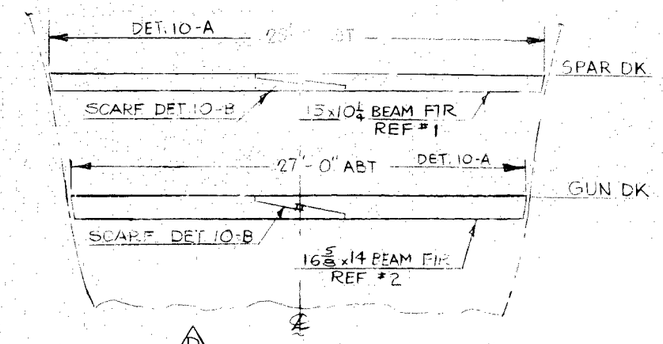

D SECT. "5-B"
BEAM #2
SCALE: 3/16 = 1'-0

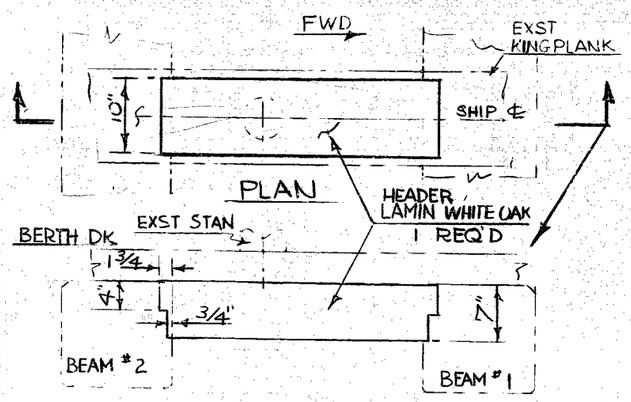

D DET 8-B (SEE "EL 2-A")
SC: 1" = 1'-0"

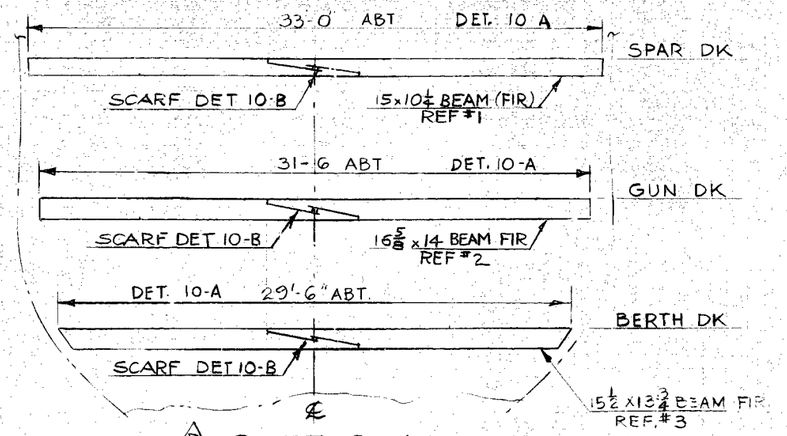

D SECT. 6-A
BEAM #3
SCALE: 3/16 = 1'-0

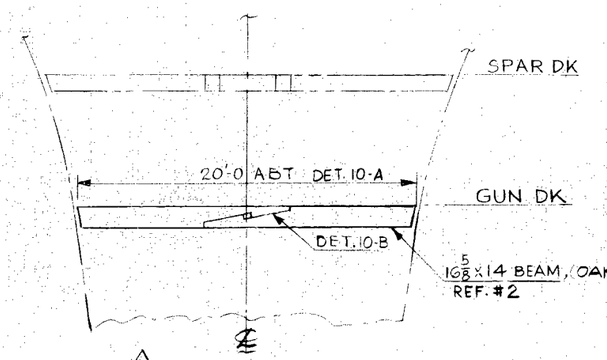

D SECT. "5-A"
BEAM #1
SCALE: 3/16 = 1'-0

C

DECK BEAM LAMINATED
SPAR, GUN & BERTH DECK

SIZE	CODE IDENT. NO.	NAVSHIPS DWG. NO.	REV
L	1X21	101 4519747	D
SCALE AS NOTED		SHEET 2 OF 3	

4519747 (1X1)

4519747 SH2

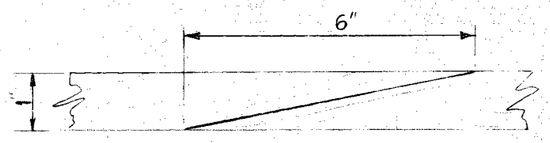

DET. "12-A"
TYP. LAMIN SCARF
NO SCALE

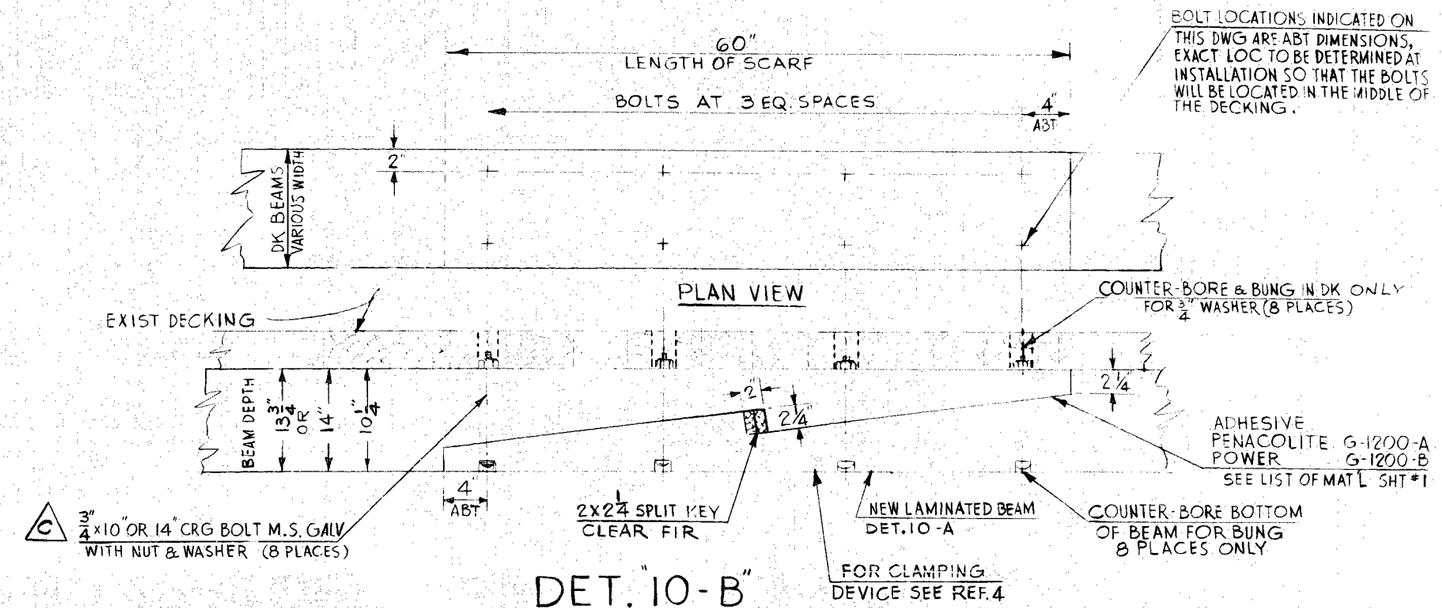

DET. "10-B"
TYP DK BEAM SCARF
SCALE: 1 1/2 = 1'-0"

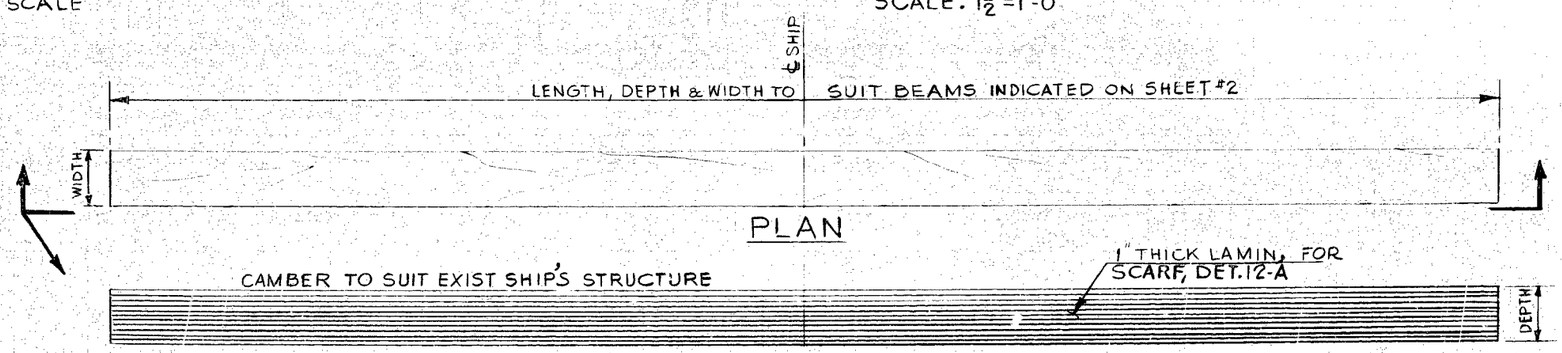

DET. "10-A"
TYPICAL BEAM
NO SCALE

C

DECK BEAM LAMINATED SPAR, GUN & BERTH DECK			
SIZE	CODE IDENT. NO.	NAVSHIPS DWG. NO.	REV.
L	1X21	101 4519747	D
SCALE AS NOTED		SHEET 3 OF 3	

4519747 (1X21)

4519747 SH 3