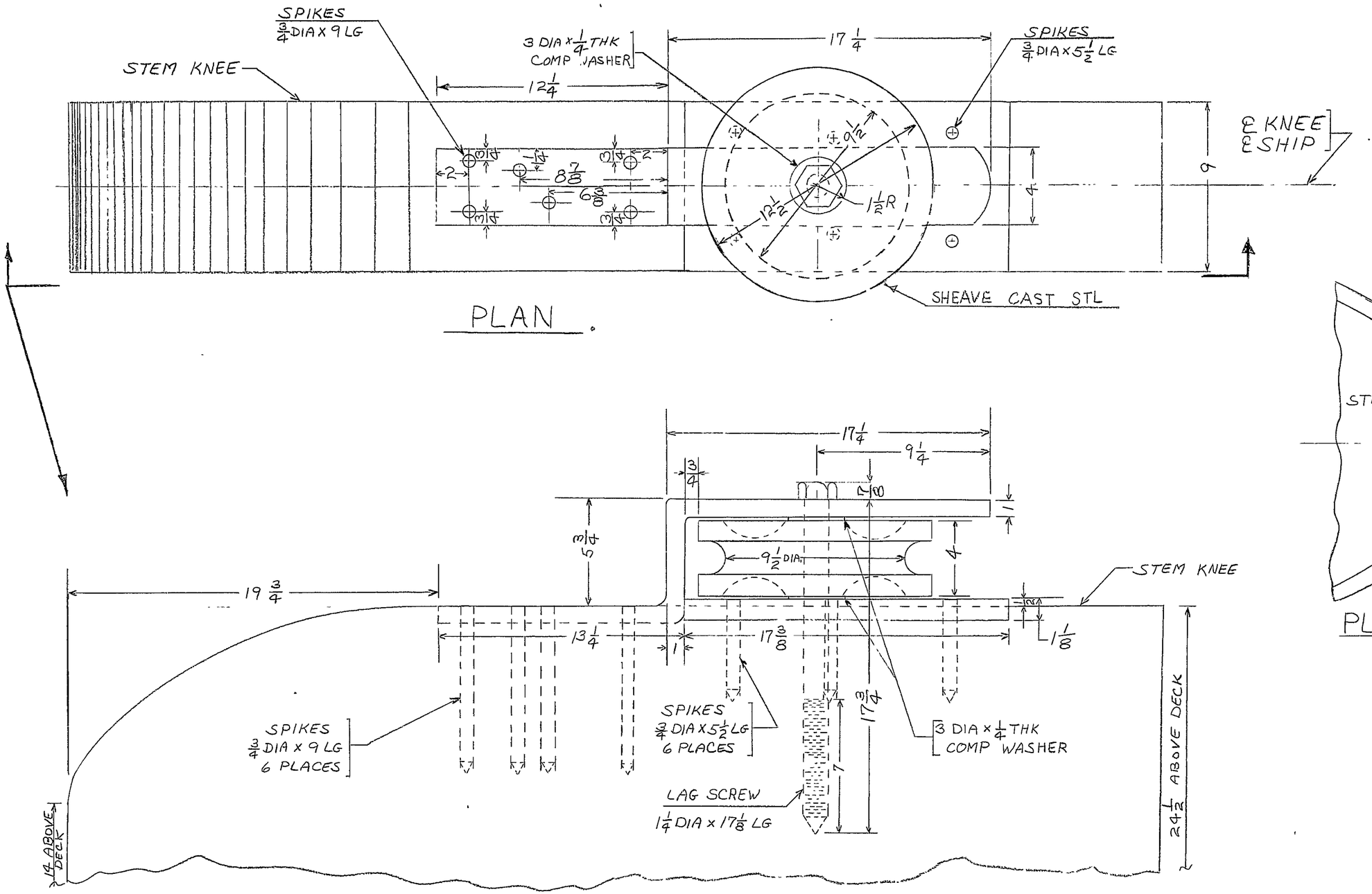

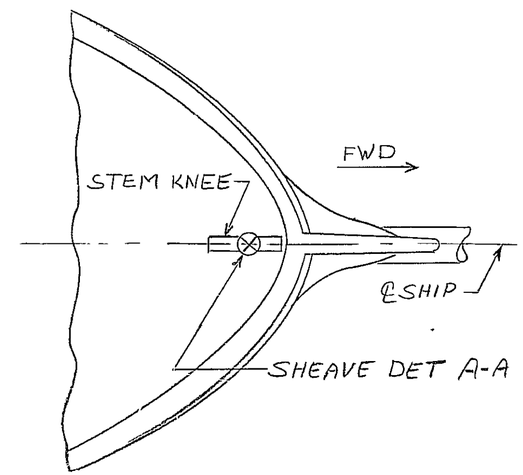

PLAN OF GUN DECK
NO SCALE

SHEAVE ASSY ON STEM KNEE - GUN DK			
US FRIGATE CONSTITUTION			
SIZE	DRAWN SJS	NAVSHIPS DWG NO	REV
L	80060(IX21)	4518470	A
SCALE AS NOTED		SHEET 1 OF 1	