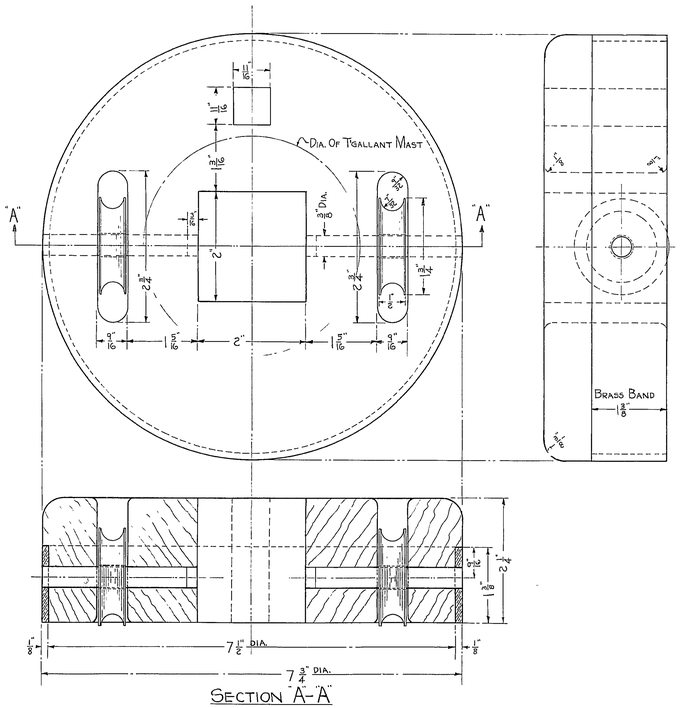

SECTION "A-A"

Fore Mast Truck

Scale: Full Size

Truck To Be Of Lignum Vitae.
Sheaves, Pins And Band To Be Of Brass.

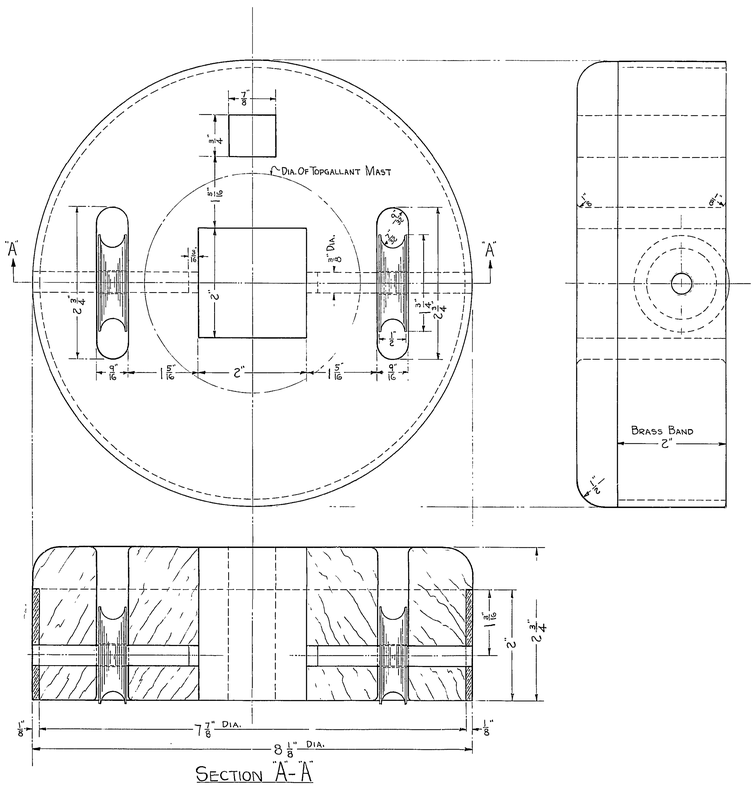

SECTION "A-A"

Main Mast Truck

Scale: Full Size

Truck To Be Of Lignum Vitae.
Sheaves, Pins And Band To Be Of Brass.

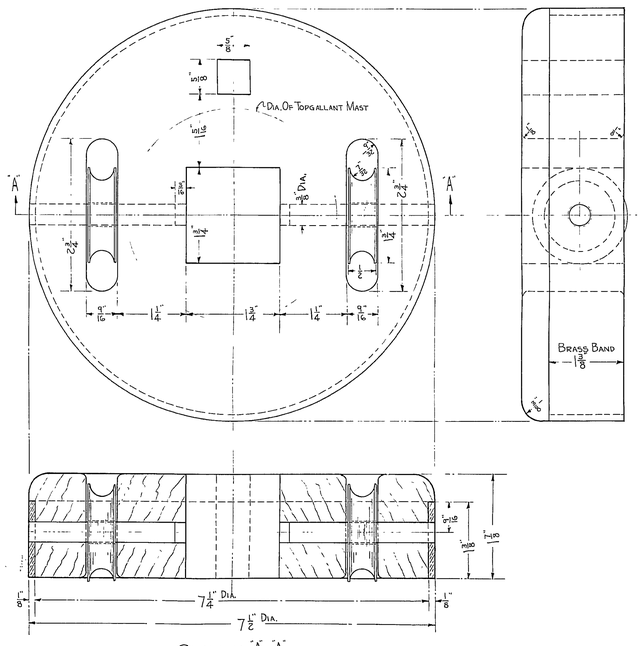

SECTION "A-A"

Mizzen Mast Truck

Scale: Full Size

Truck To Be Of Lignum Vitae.
Sheaves, Pins And Band To Be Of Brass.

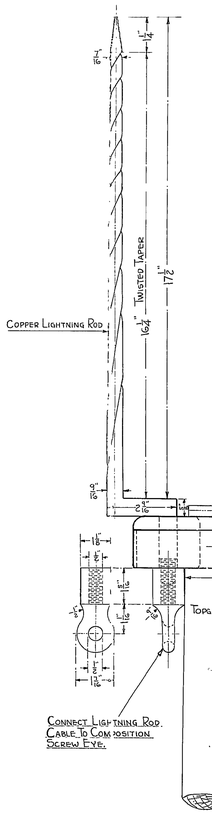

Mizzen M
Scale

In charge of work: John A. Lord. Lieut. (c.c.) U.S.N.
Drawn By } McCunha
Traced By }

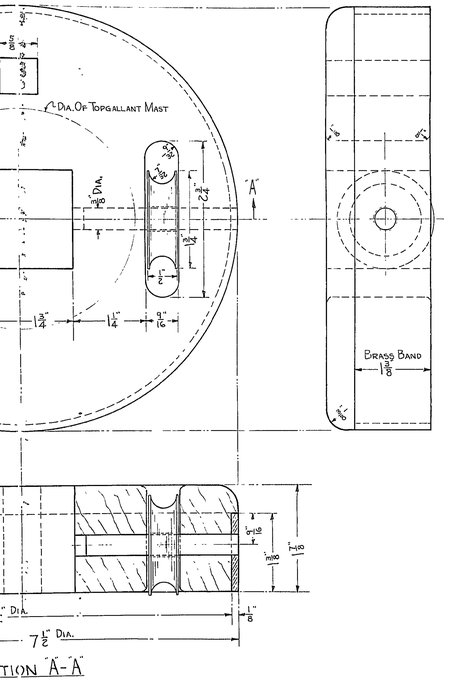

TION "A-A"

Mast Truck
Full Size

lignum Vitae.
nd Band To Be Of Brass.

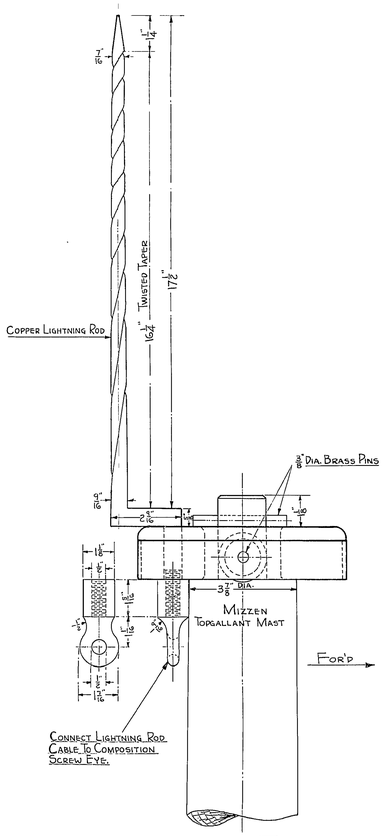

Mizzen Mast Truck
Scale: Half Size.

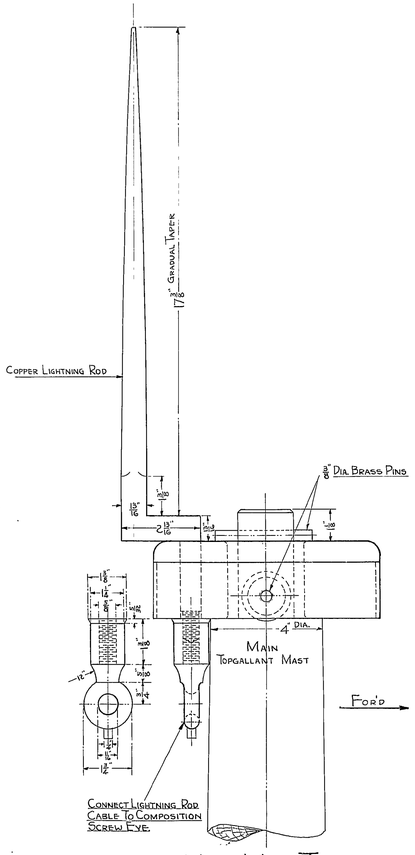

Main Mast Truck
Scale: Half Size.

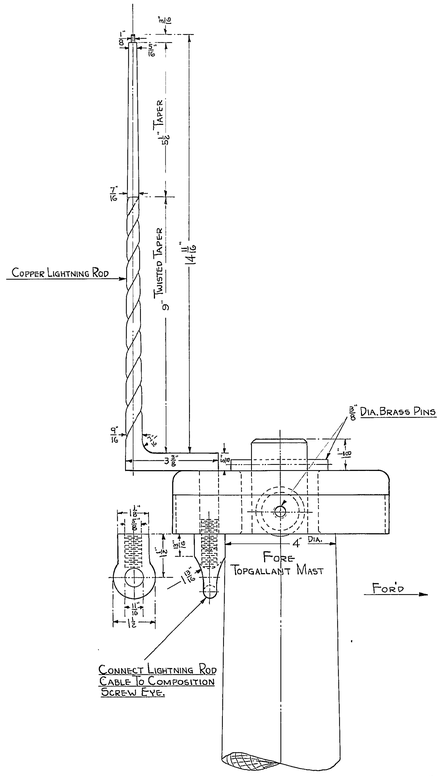

Fore Mast Truck
Scale: Half Size.

NOTE:
This Plan Of Trucks And Lightning Rods With Slight Modifications Was Drawn As Per Old Fittings Formerly Installed On Masts.

Restoration 1927

U.S. FRIGATE CONSTITUTION
Fore, Main And Mizzen Mast Trucks And Lightning Rods

Navy Yard, Boston.
Scale: 6" & 12" = 1 Ft.

April 1929

Approved For Manager
J. A. Lord.
Lieut. (C.C.) U.S.N.
Supt of Restoration

No. 29624