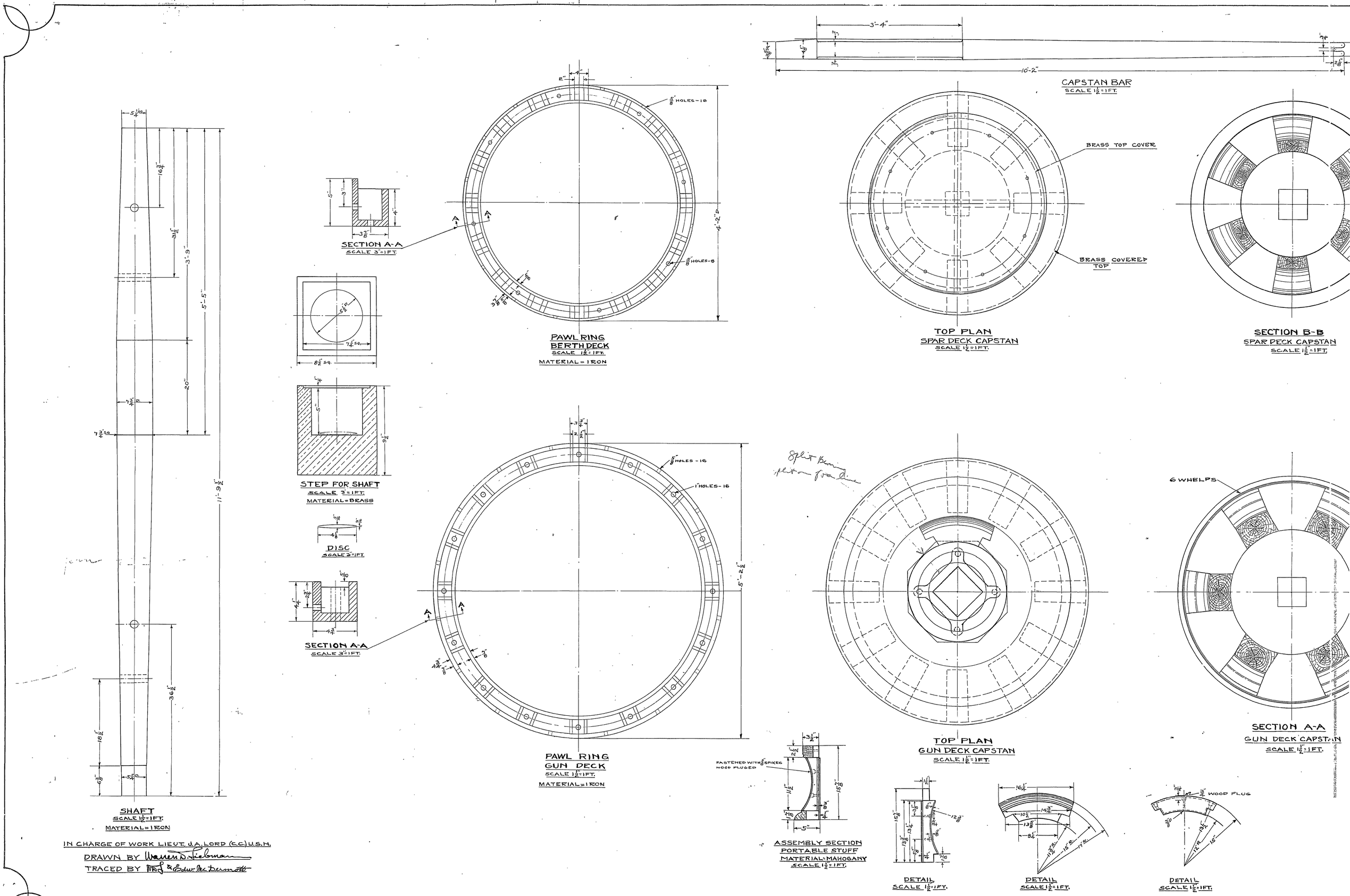

IN CHARGE OF WORK LIEUT. J.A. LORD (C.C.) U.S.N.

DRAWN BY Warren D. Fielman

TRACED BY [illegible] & Edw. McDermott