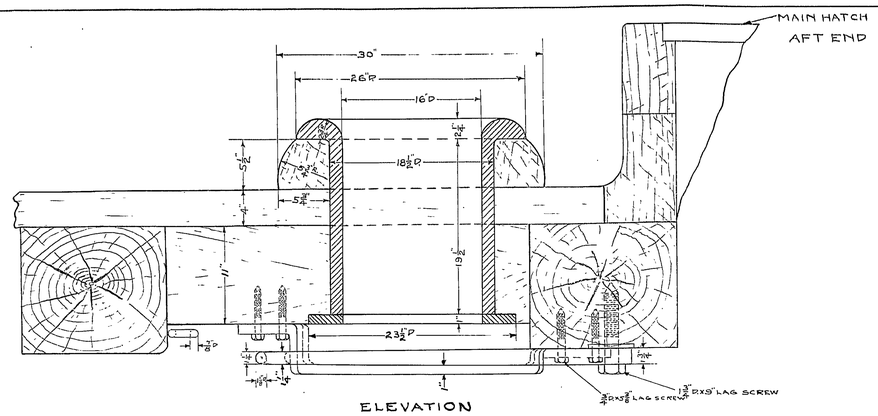

ELEVATION
LOOKING TO PORT

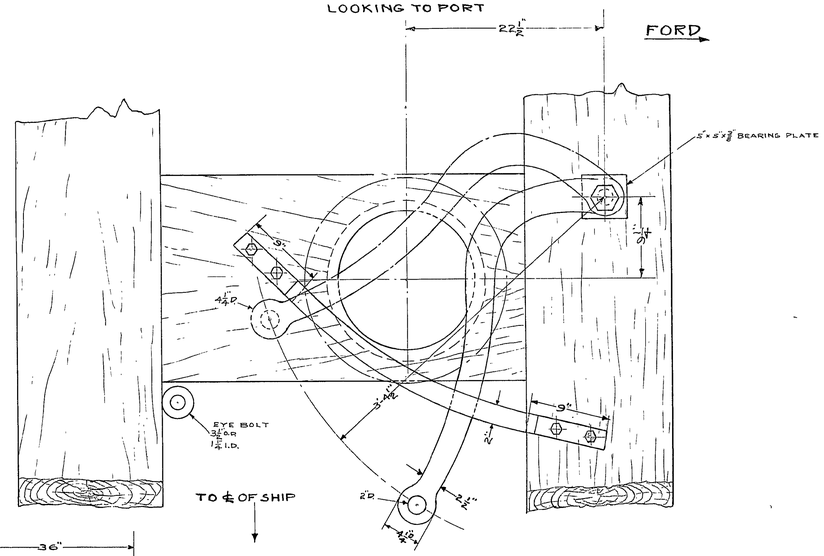

PLAN UNDER DECK LOOKING UP
SCALE: 1 1/2" = 1 FT.

1-PORT, 1-STB'D. SIMILAR

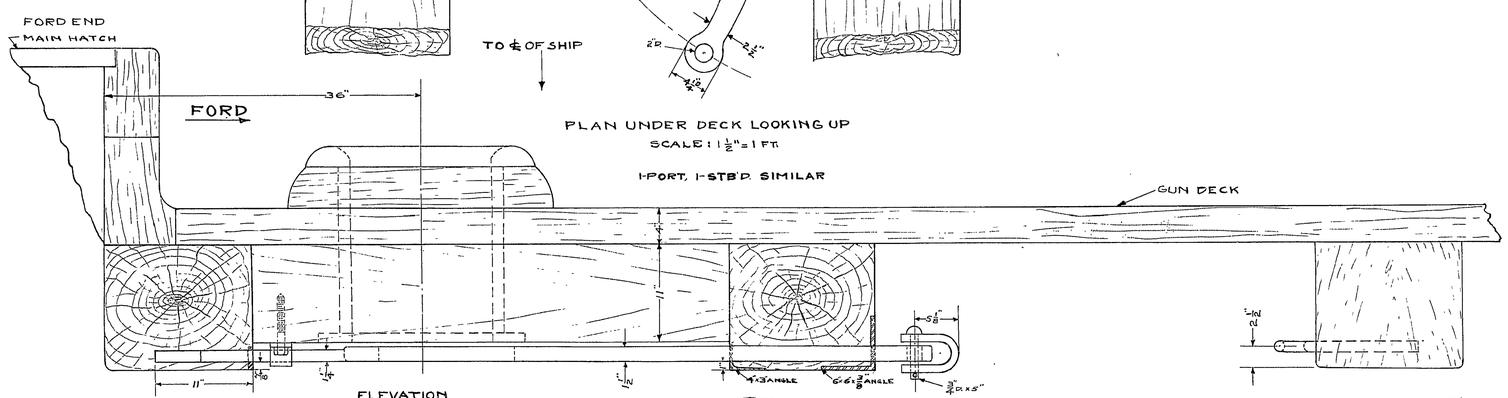

ELEVATION
SCALE: 1 1/2" = 1 FT.

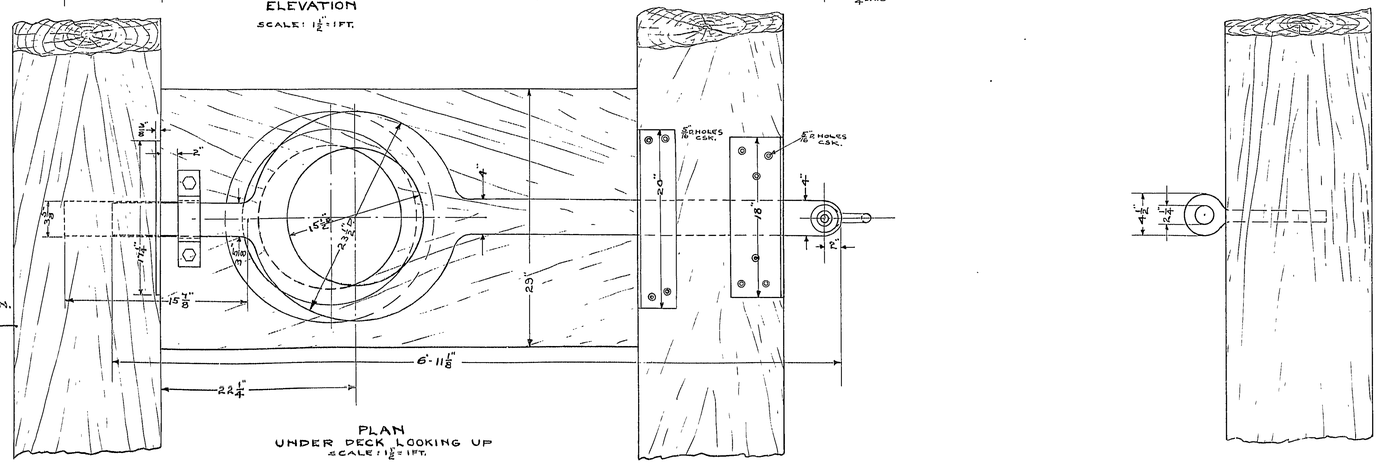

PLAN
UNDER DECK LOOKING UP
SCALE: 1 1/2" = 1 FT.

REFERENCE PLANS

GUN DECK	GENERAL ARRANGEMENT	#34676
do do	PLANKING REMOVED	#15644

NOTE:- THE COMPRESSORS SHOWN ON THIS PLAN WERE INSTALLED ON BOARD THE SHIP PRIOR TO RESTORATION AS A PART OF OLD CHAIN CABLE HANDLING EQUIPMENT

RESTORATION 1927

U.S. FRIGATE CONSTITUTION

CHAIN CABLE COMPRESSORS

NAVY YARD BOSTON — MAR. 1929

SCALE: 1 1/2" = 1 FT.

IN CHARGE OF WORK J.A. LORD: LIEUT. (C.C.) U.S.N.
DRAWN BY Warren D. Pelman & Edw. J. Fitzsimmons
TRACED BY Edw. J. Fitzsimmons

APPROVED FOR MANAGER

LIEUT., (C.C.) U.S.N
SUPT. OF RESTORATION

NO. 29620