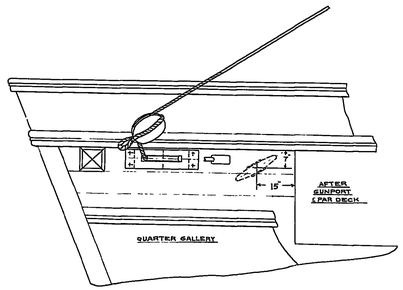

ELEVATION - STBD. SIDE

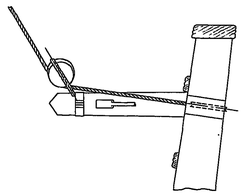

SECTION-LOOKING AFT

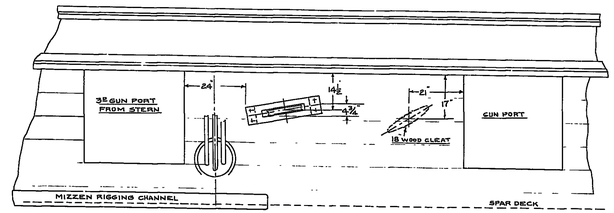

MAIN SHEET CHESSTREE
STBD. SIDE SHOWN - PORT SIDE SIMILAR
SCALE ½" = 1 FT.

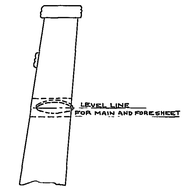

SECTION LOOKING AFT

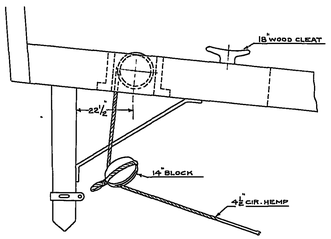

MAIN BRACE CHESSTREE
STBD. SIDE SHOWN - PORT SIDE SIMILAR
SCALE ½" = 1 FT.

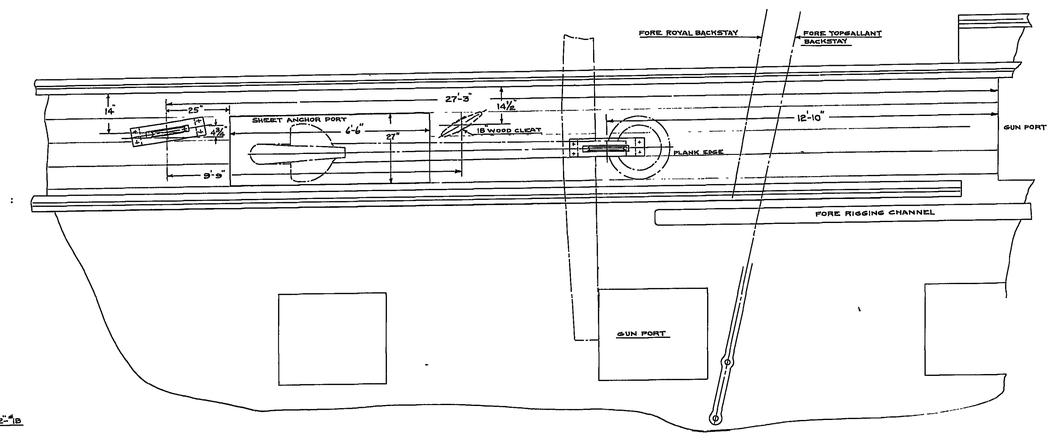

FORE SHEET CHESSTREE
STBD. SIDE SHOWN - PORT SIDE SIMILAR
SCALE ½" = 1 FT.

BOOM BRACE CHESSTREE

not constructed as shown - cs

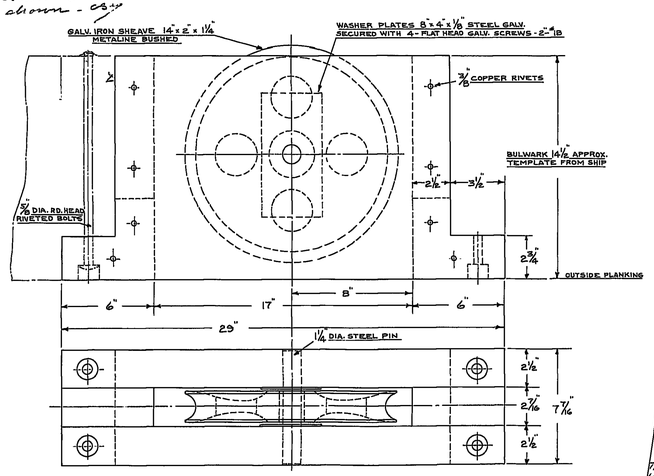

DETAIL OF CHESSTREE
MATERIAL - WHITE OAK
SCALE 3" = 1 FT.

AS SHOWN FOR MAIN BRACE - MAIN SHEET AND FORE SHEET
FOR BOOM BRACE - 15" x 1½" x 1⅛" GALV. IRON SHEAVE - METALINE BUSHED

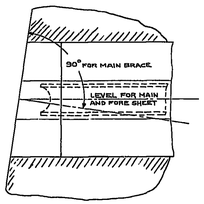

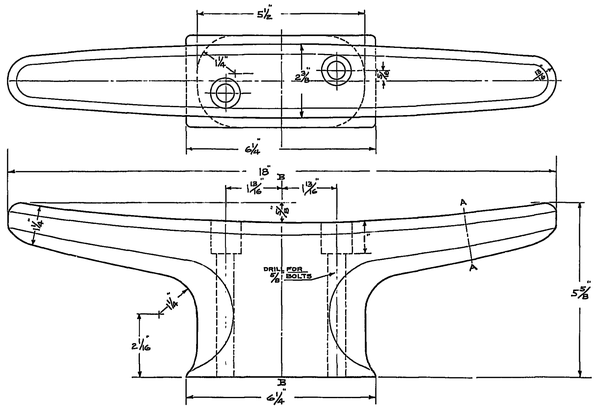

18" CLEAT
MATERIAL - WHITE OAK
SCALE 6" = 1 FT.
8 - WANTED

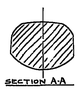

SECTION A-A

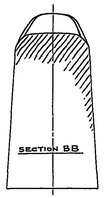

SECTION BB

RESTORATION 1927

U.S. FRIGATE CONSTITUTION

CHESSTREES AND CLEATS

NAVY YARD BOSTON MARCH 22, 1930

APPROVED FOR MANAGER

John O. H. Long

LIEUT (C.C.) U. S. N.
SUPT. OF RESTORATION

DRAWN AND TRACED BY
G. S. ADAMS - SUPERVISING DRAFTSMAN - 3-22-30

Nº 28431