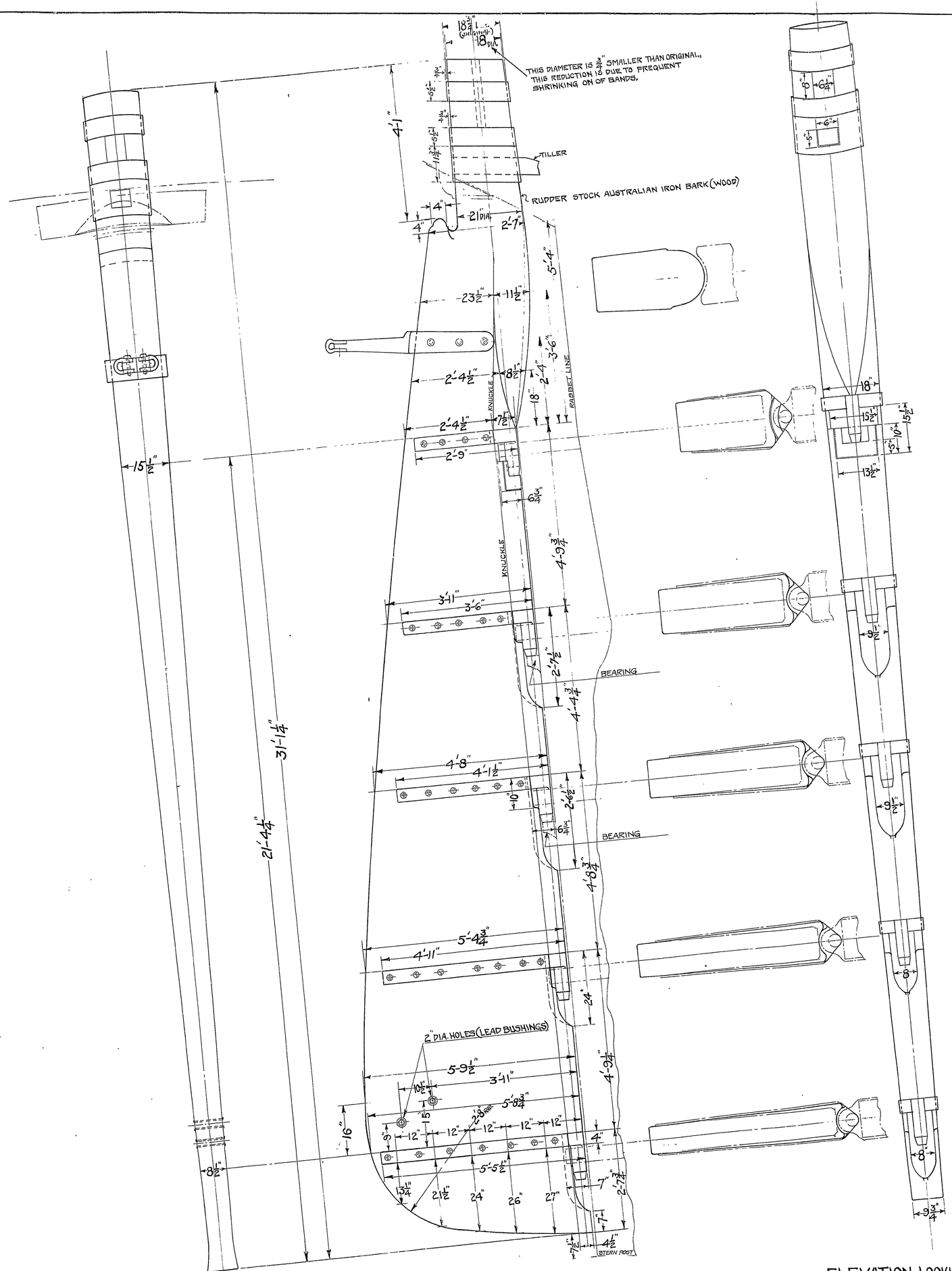

ELEVATION LOOKING FORD
SCALE 3/4"=1 FT.

ELEVATION STB'D SIDE
SCALE 3/4"=1 FT.

ELEVATION LOOKING AFT
SCALE 3/4"=1 FT.

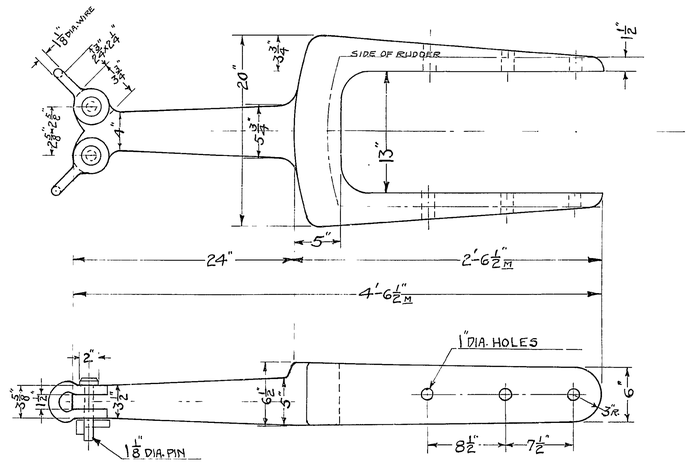

MONKEY TAIL (STEEL)
SCALE 1 1/2"=1 FT.

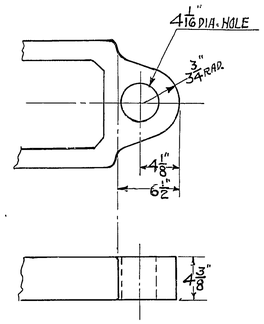

GUDGEON (COMP.)
SCALE 1 1/2"=1 FT.

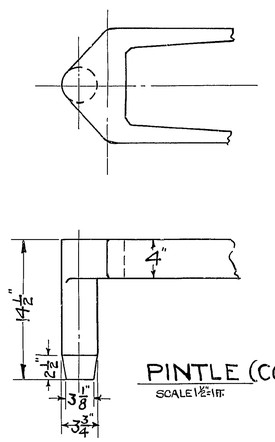

PINTLE (COMP.)
SCALE 1 1/2"=1 FT.

IN CHARGE OF WORK: J.A. LORD LIEUT. (C.C.) U.S.N
DRAWN BY J.C. GAMBLE
TRACED BY J.C.G.

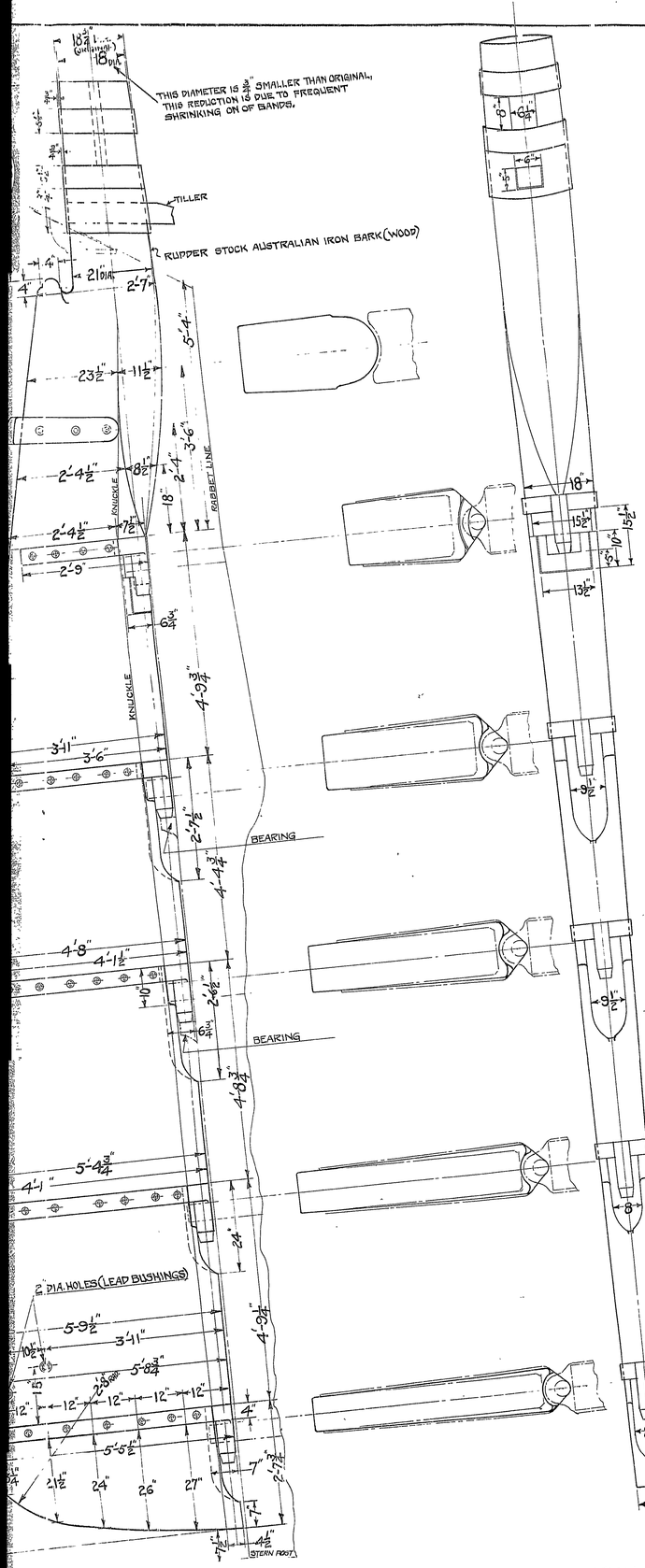

ELEVATION STB'D SIDE
SCALE 3/4"=1 FT.

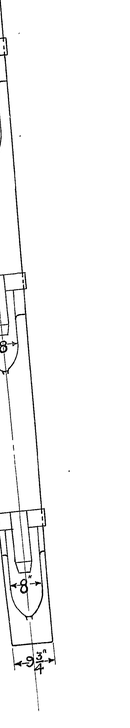

ELEVATION LOOKING AFT
SCALE 3/4"=1 FT.

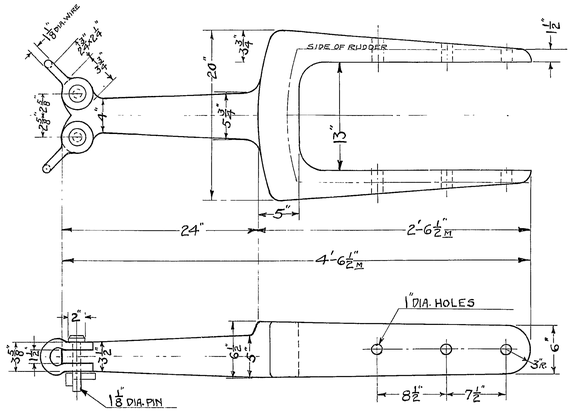

MONKEY TAIL (STEEL)
SCALE 1 1/2"=1 FT.

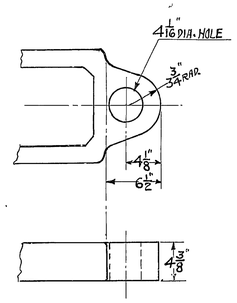

GUDGEON (COMP.)
SCALE 1 1/2"=1 FT.

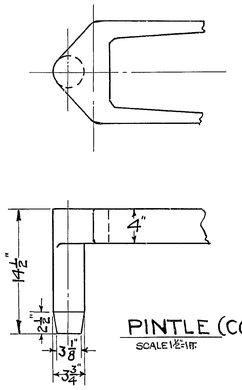

PINTLE (COMP.)
SCALE 1 1/2"=1 FT.

NOTES
1. RUDDER TAKEN FROM WORK.
2. MISSING DIMENSIONS COULD NOT BE OBTAINED AS RUDDER WAS COMPLETE AND INSTALLED ON SHIP.
3. RUDDER PINTLES FOUND TO BE IN GOOD CONDITION, NONE OF WHICH WERE REMOVED, THICKNESS OF METAL UNKNOWN.

U.S.S. FRIGATE CONSTITUTION

RUDDER & DETAILS

NAVY YARD, BOSTON — MARCH 18, 1930

SCALE 3/4" & 1 1/2"=1 FT.

APPROVED FOR MANAGER
John A. Lord
LIEUT. (C.C.) U.S.N.
SUPT. OF RESTORATION

C+R. No 165385

No 28429

28429 U.S. FRIGATE CONSTITUTION RUDDER & DETAILS 28429