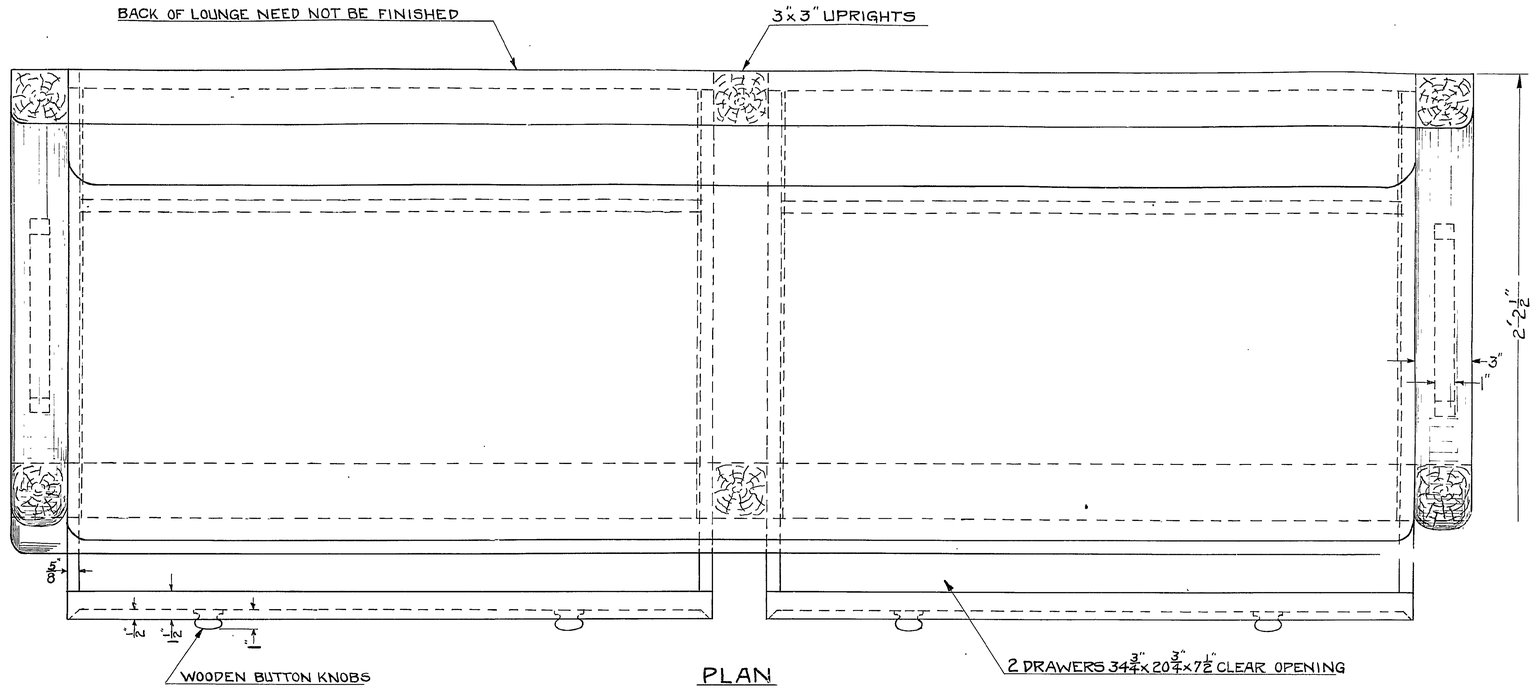

PLAN
SCALE: 3"=1 FT.

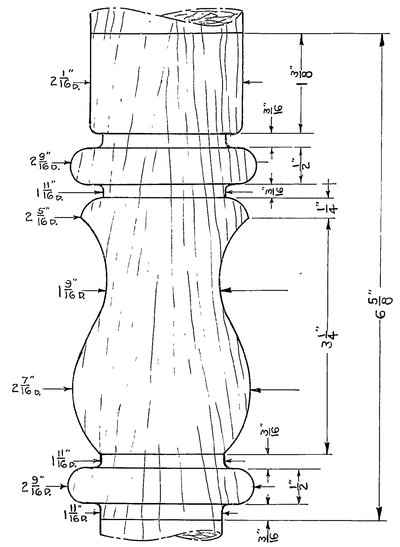

DETAIL
FULL SIZE

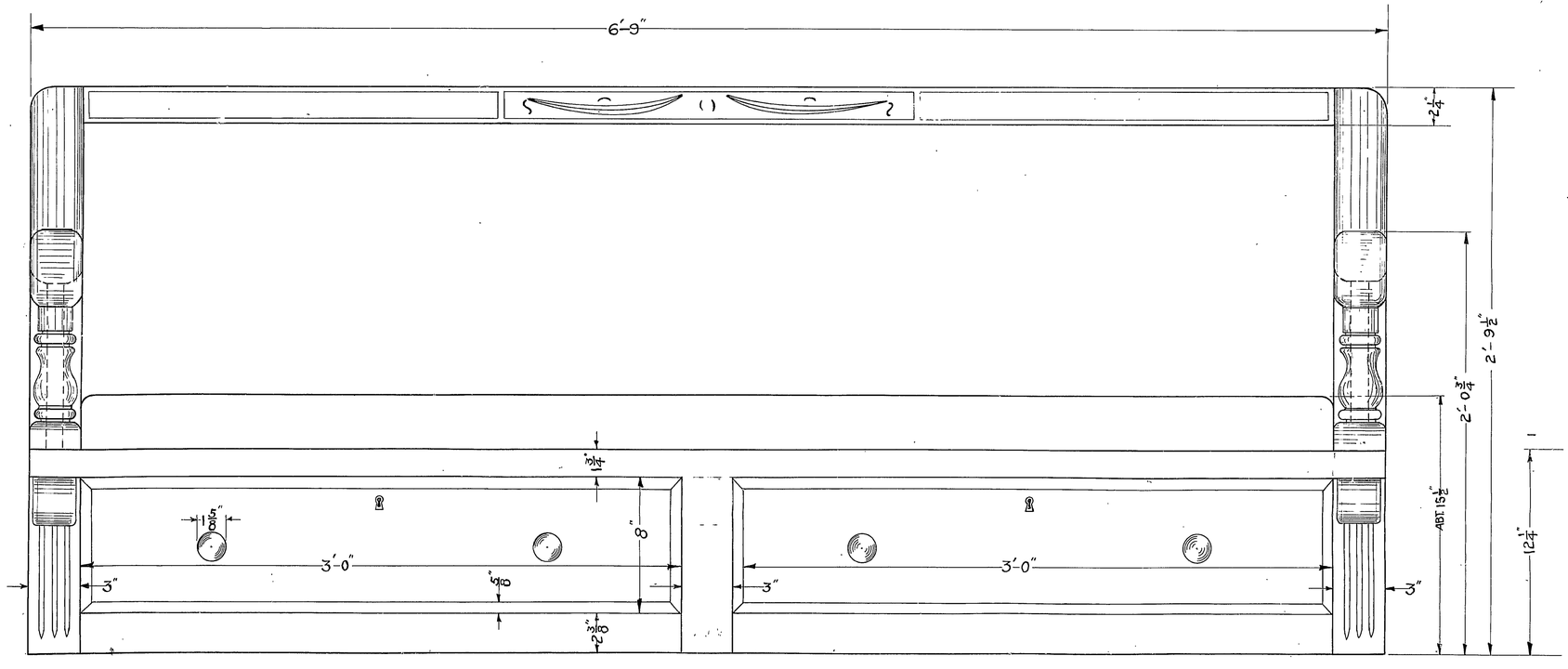

FRONT ELEVATION
SCALE: 3"=1 FT.

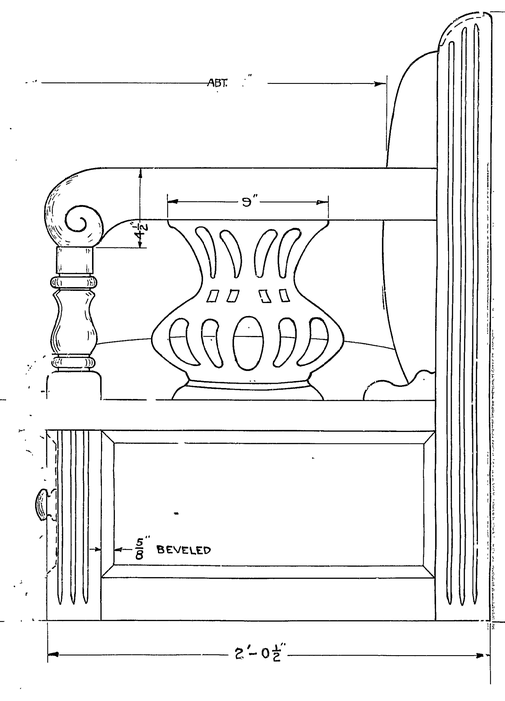

END ELEVATION
SCALE 3"=1 FT.

IN CHARGE OF WORK J.A. LORD LIEUT. (C.C.) U.S.N.
DRAWN BY WARREN D. LIEBMAN & J.C. GAMBLE
TRACED BY J.C. GAMBLE

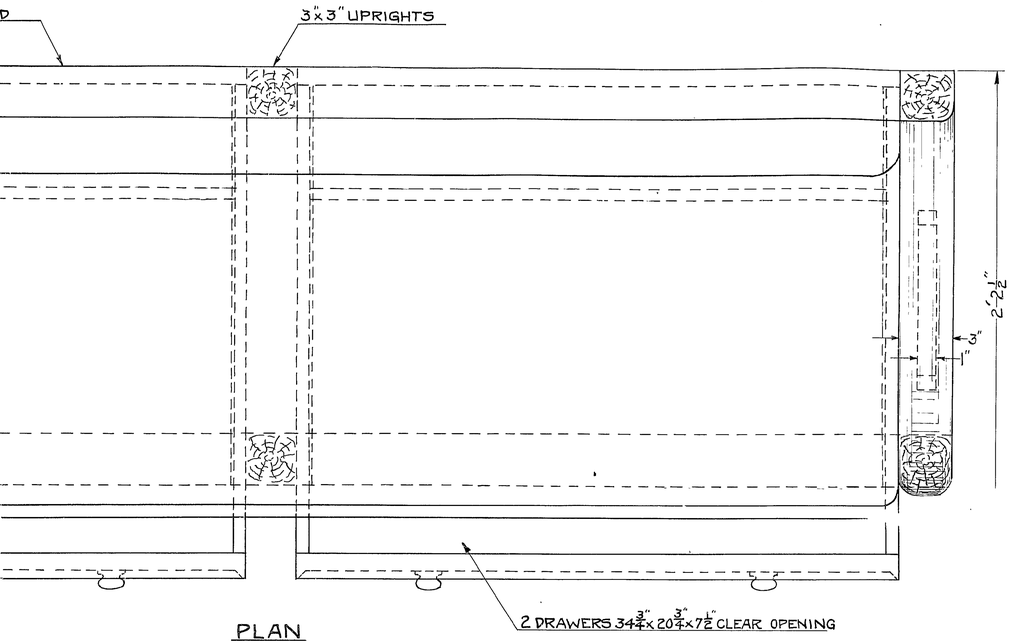

PLAN
SCALE: 3"=1 FT.

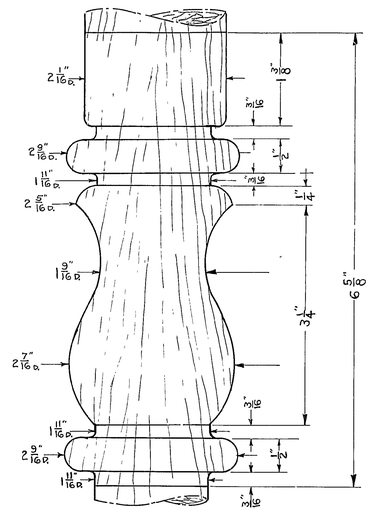

DETAIL
FULL SIZE

REFERENCE PLANS

GUN DECK-GENERAL	ARRANGEMENT	#34676
FURNITURE-	CABIN TABLE	#23204
FURNITURE-	CABIN CHAIR	#23550
do	CABIN SIDE BOARD	#25312
do	CAPTAIN'S WRITING DESK	#27527
do	BERTHS FOR CAPTAIN'S STATEROOM	#28277

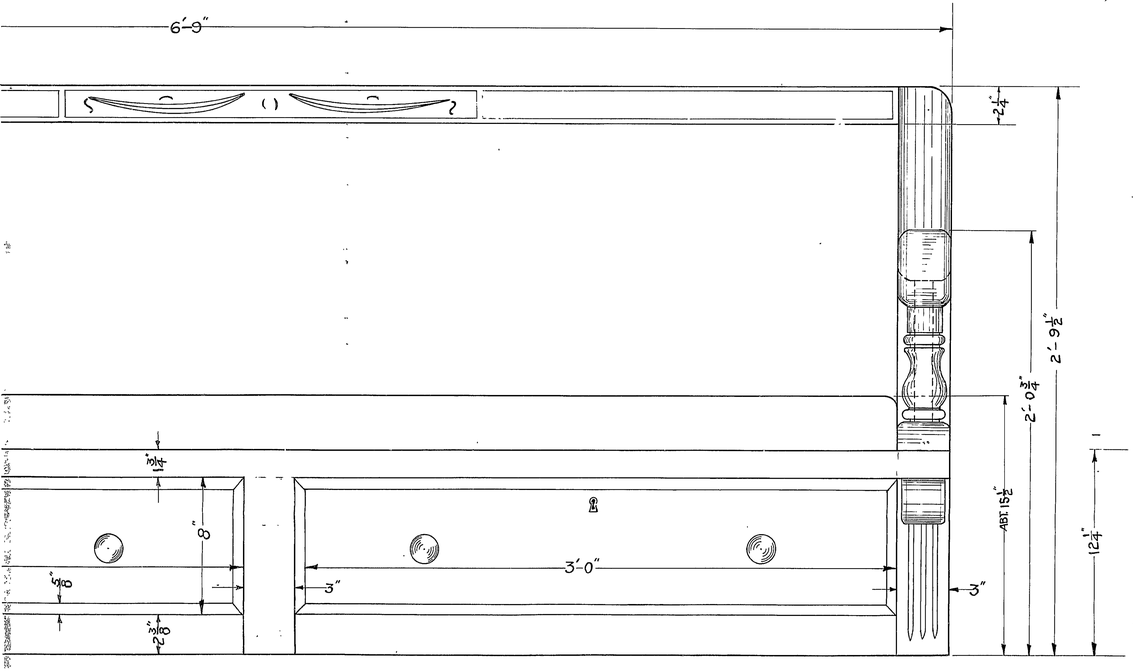

FRONT ELEVATION
SCALE: 3"=1 FT.

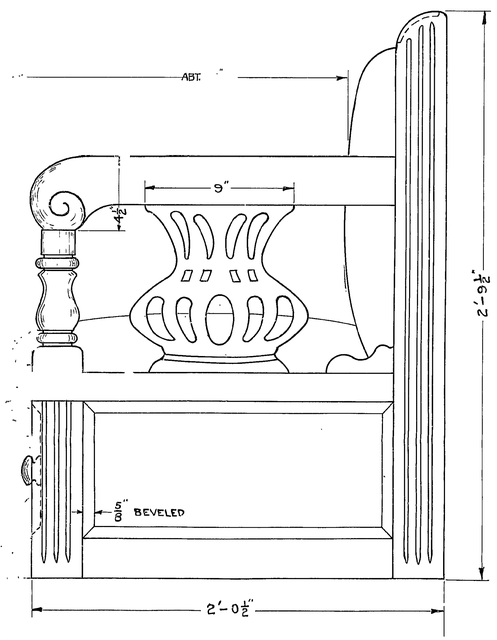

END ELEVATION
SCALE 3"=1 FT.

NOTE:—

NUMBER REQUIRED THUS = ONE
LOCATION = AFTER CABIN
MATERIAL TO BE MAHOGANY
TO BE LEATHER COVERED, DARK BROWN LEATHER
TO BE FILLED WITH HAIR

THIS PLAN SUPERSEDES PLAN OF SAME NUMBER DATED SEPT. 1928

RESTORATION 1927

U.S. FRIGATE CONSTITUTION
FURNITURE
CABIN LOUNGE

NAVY YARD, BOSTON, NOV. 1929
SCALE: 3"=1 FT.

APPROVED FOR MANAGER
John O. Lord.
LIEUT. (C.C.) U.S.N.
SUPT. OF RESTORATION

No. 26954