| WEIGHT AND MOMENT FOR MATERIAL SHOWN ON THIS DRAWING (TOTALS BY WEIGHT GROUP) | | | | | | | | | | | |
|---|---|---|---|---|---|---|---|---|---|---|---|
| REV | ADD OR DEDUCT | WEIGHT GROUP | WEIGHT (LBS) | VERTICAL | | LONGITUDINAL | | | TRANSVERSE | | |
| | | | | LEVER (FT) | MOMENT (FT LBS) | LEVER (FT) | F/A | MOMENT (FT LBS) | LEVER (FT) | P/S | MOMENT (FT LBS) |
| A | NA | | | | | | | | | | |

## REVISIONS

| REV | ZONE | DESCRIPTION | BY | DATE | APPD |
|---|---|---|---|---|---|
| A | | APPROVAL SIGNATURE ADDED | — | 11/25 | [illegible] |

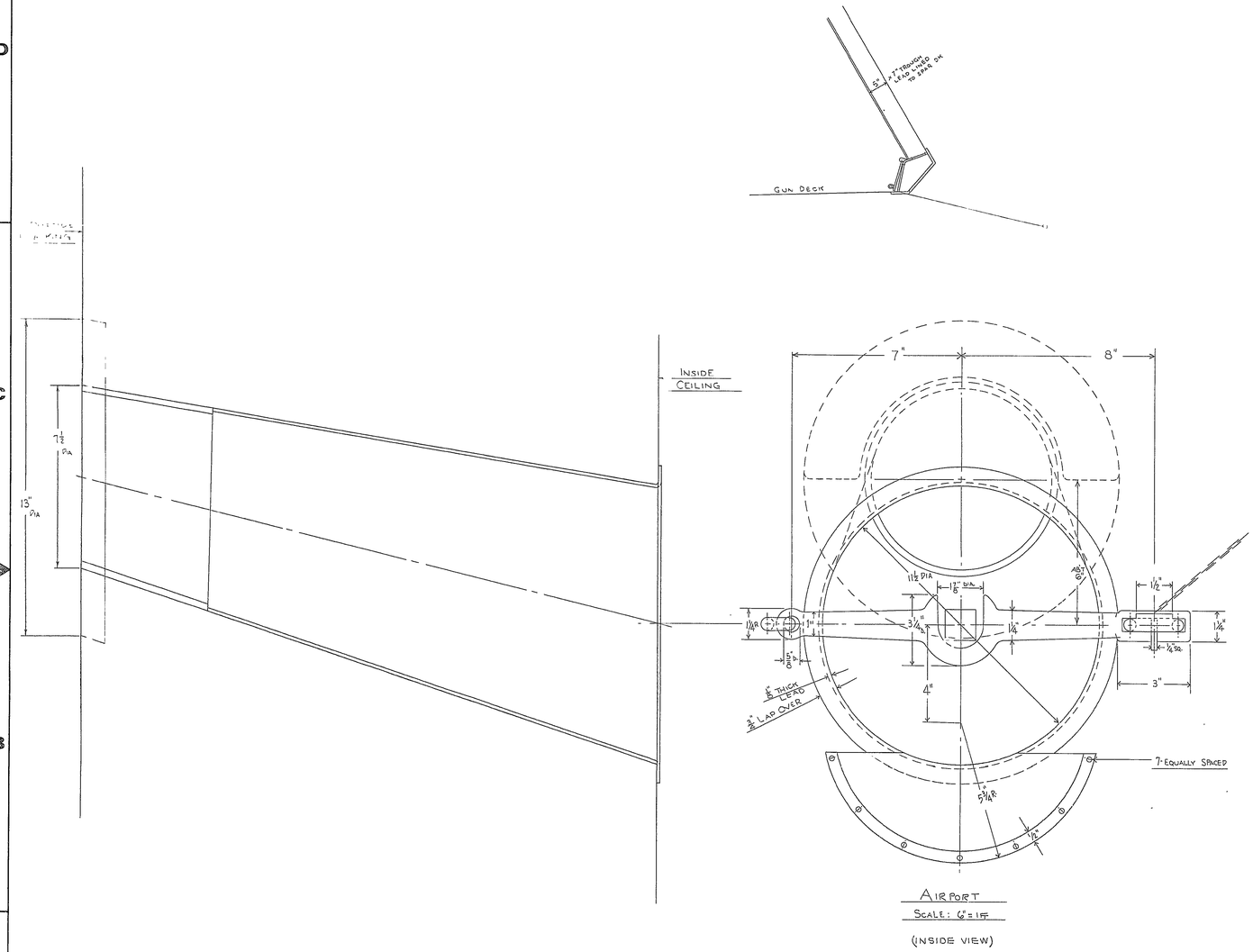


AIRPORT
SCALE: 6" = 1 FT
(INSIDE VIEW)

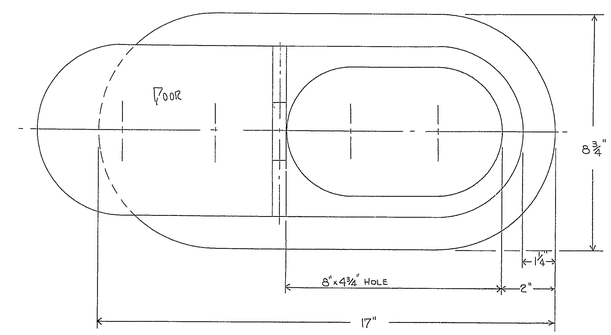


SCUPPER
SCALE: 6" = 1 FT
(OUTSIDE VIEW)

FOR LIST OF MATERIAL SEE SHEET NO

"THIS DRAWING WAS DEVELOPED IN ACCORDANCE WITH THE LATEST ISSUES OF THE STANDARDS LISTED IN MIL-D-1000 AND INCLUDES THE STANDARDS DESIGNATED IN THE A-B-C NAVAL TRIPARTITE STANDARDIZATION AGREEMENTS: ONM INSTRUCTIONS 5711 34 OF 20 DECEMBER 1962 AND NAVMAT INSTRUCTION5711.36A OF 14 AUG 67

• DRAWINGS SO MARKED, ARE AFFECTED BY THIS DRAWING AND SHIP PLAN INDICES SHOULD SO STATE

| NO | TITLE | NAVSEA DWG NO |
|---|---|---|

## REFERENCES

AUTH

USS CONSTITUTION
SHIP IDENT NO & NAME
PORTSMOUTH NAVAL SHIPYARD

**BOSTON PLANNING GROUP**
BOSTON, MASS 02129

EXAMINED

CODE 2050.1 EXT 367
BRANCH HD Johnson
CHECKED T.C.
DRAWN L.M. NICASTRO
APPD FOR DESIGN DIV [signature] 12/7/75
APPD (OTHER THAN DESIGN DIV)

COVERS AIRPORT & SCUPPER

| | | | | |
|---|---|---|---|---|
| H | 80060/1X21 | 145 | NAVSEA DWG NO 25001 | REV A |
| SCALE | | AS SHOWN | SHEET 1 OF 1 | |

| NO | RESERVATION | ESTIMATED RELEASE DATE |
|---|---|---|