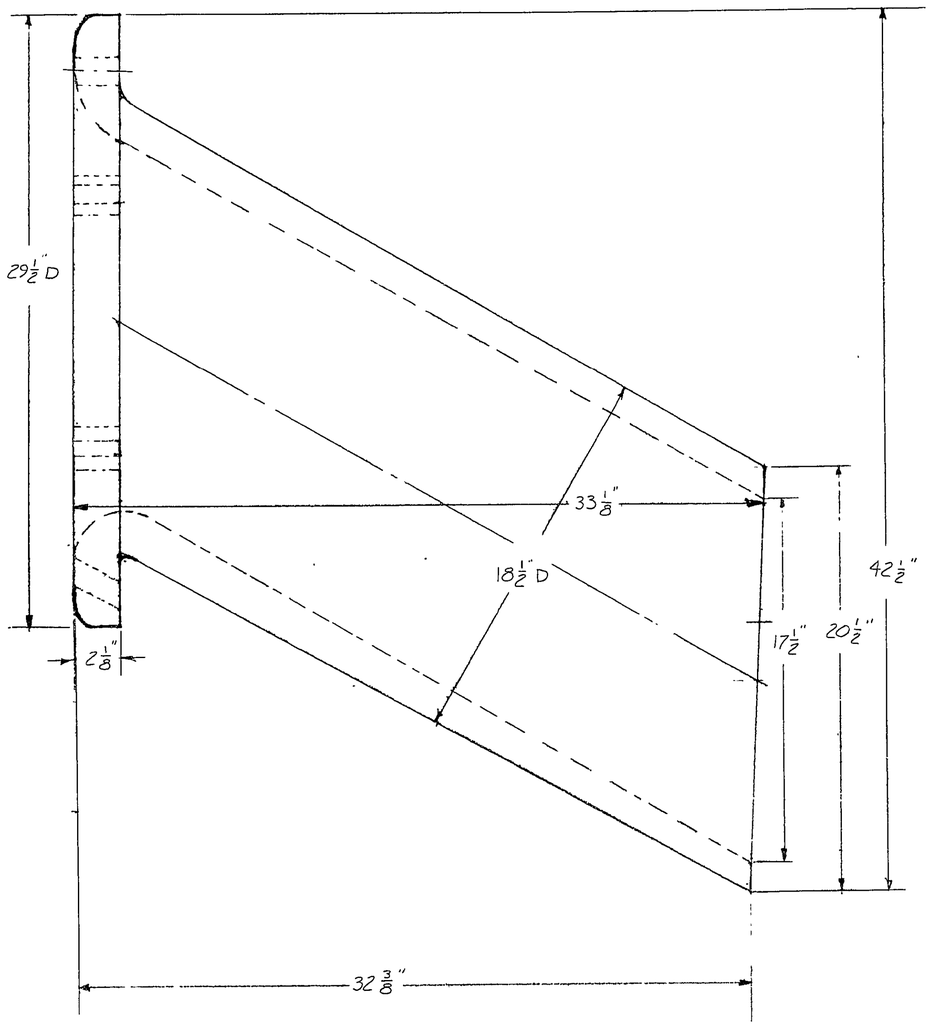

SECT A-A

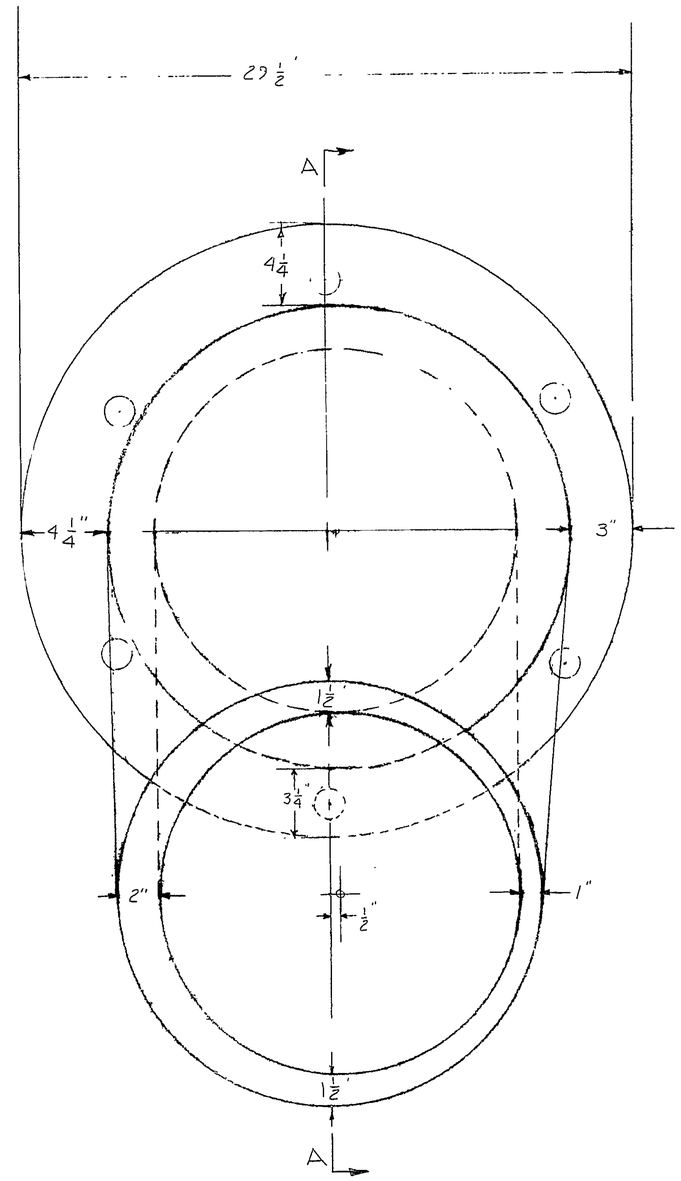

BOSTON NAVAL SHIPYARD 12/15/71

FRIGATE CONSTITUTION

HAWSE PIPE

DWG. NO. 24808

HAWSE PIPE (IS XI) 80845

1-19-73