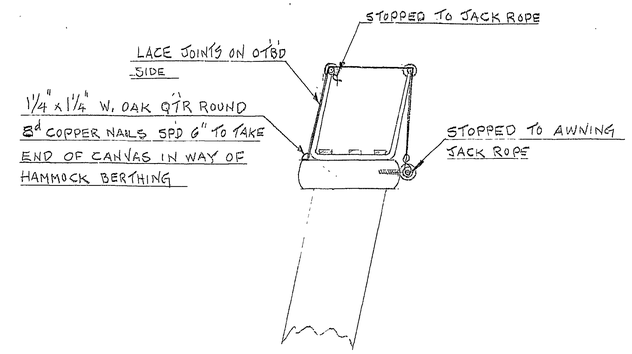

SECTION IN WAY OF HAMMOCK BERTHING

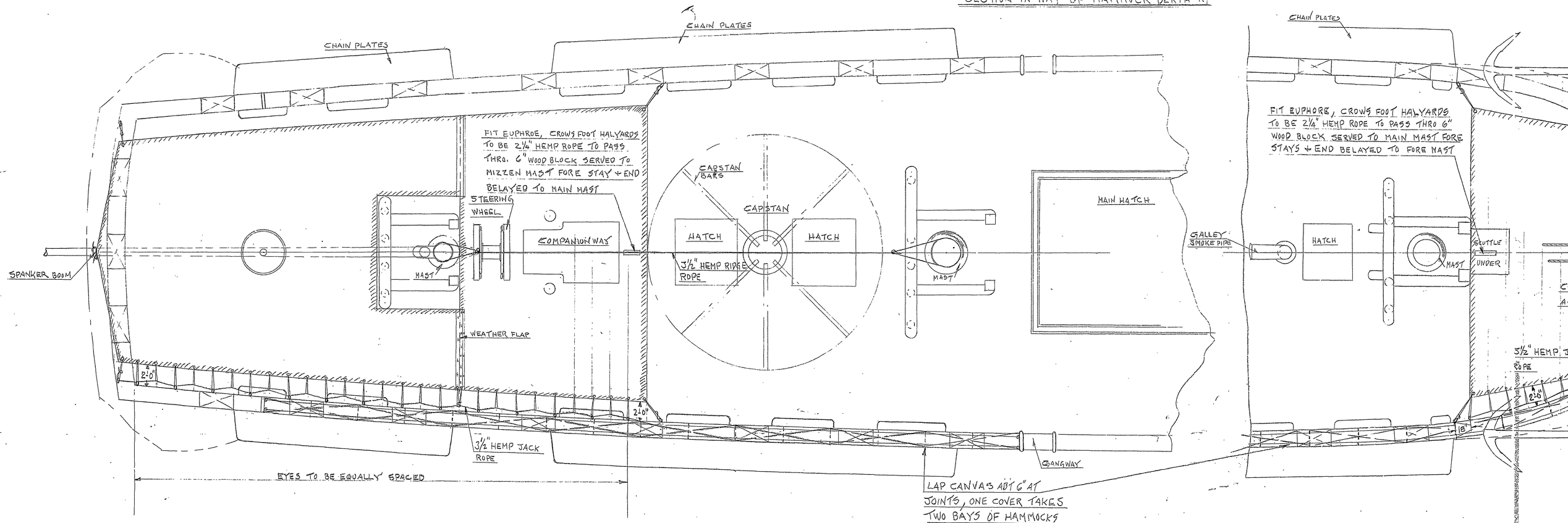

PLAN OF SPARDECK

STBD. SIDE DRAWN PORT SIMILAR BUT TO OTHER HAND

NOTE:-

1. CANVAS TO BE #3 — 22" WIDE FOR
2. END EYES TO BE IN HORIZ PLANE OTH
EYES TO BE VERTICAL
3. CANVAS FOR HAMMOCK CLOTHS #4 —

IN CHARGE OF WORK C.S.A.

DRAWN BY C.C.M.

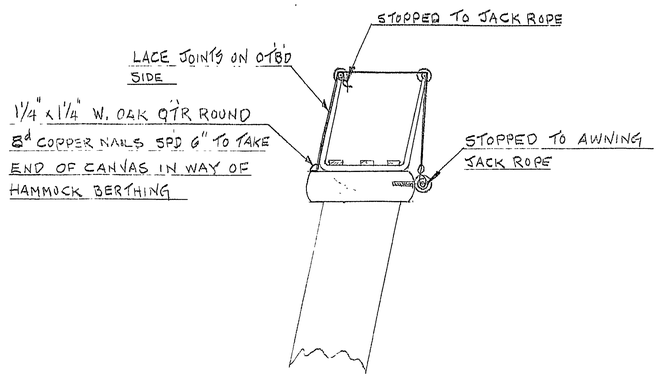

SECTION IN WAY OF HAMMOCK BERTHING

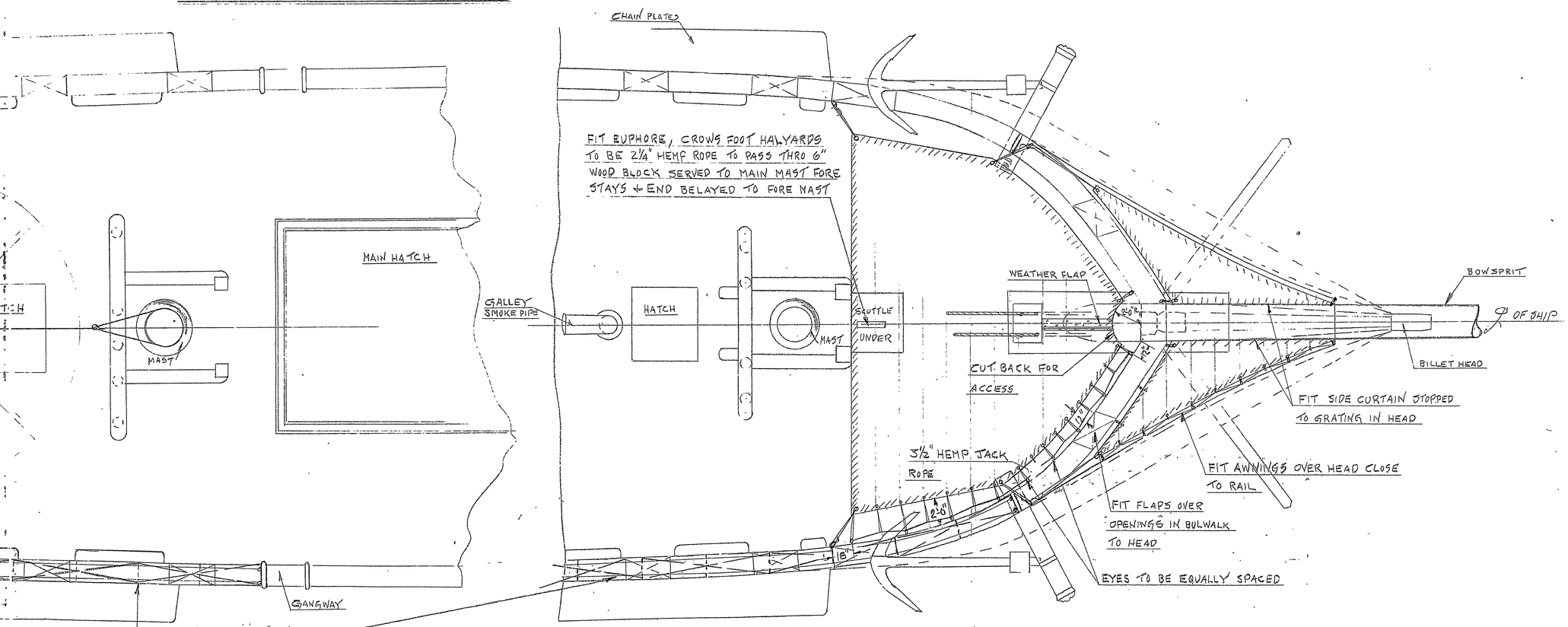

PLAN OF SPARDECK

STBD SIDE DRAWN PORT SIMILAR BUT TO OTHER HAND

NOTE:-

1. CANVAS TO BE #3 — 22" WIDE FOR AWNINGS
2. END EYES TO BE IN HORTZ. PLANE OTHER EYES TO BE VERTICAL
3. CANVAS FOR HAMMOCK CLOTHS #4 - 42" WIDE

RESTORATION 1927

U. S. FRIGATE CONSTITUTION

SPAR DECK

AWNINGS + HAMMOCK CLOTHS

NAVY YARD, BOSTON — APRIL 1931

SCALE ¼" = 1FT

APPROVED FOR MANAGER

NO. 23689

SPARE