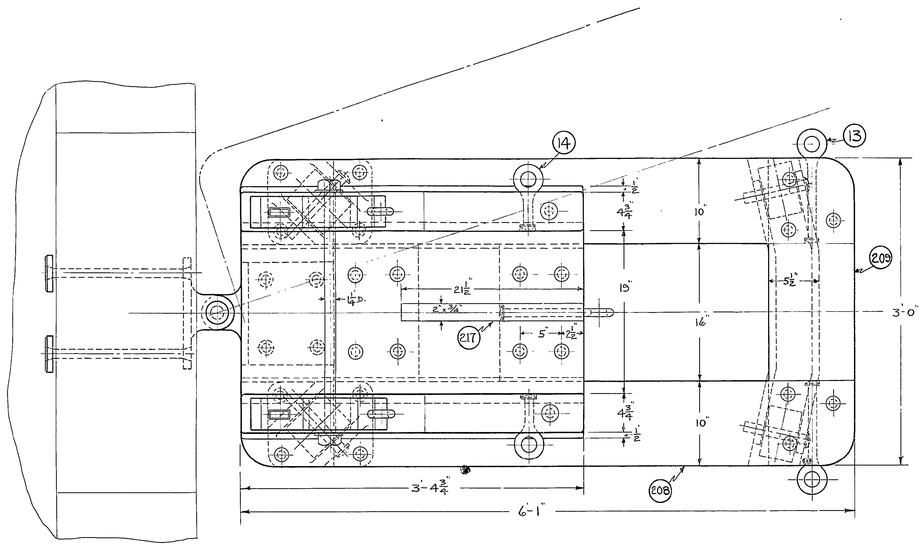

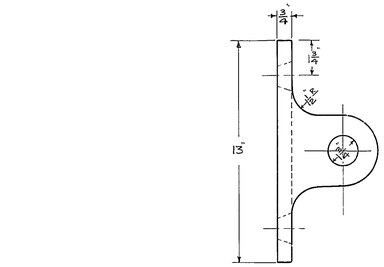

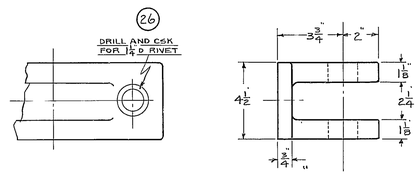

FIGHTING BOLT PAD AT SIDE OF SHIP
SCALE 3" = 1FT.
(2)

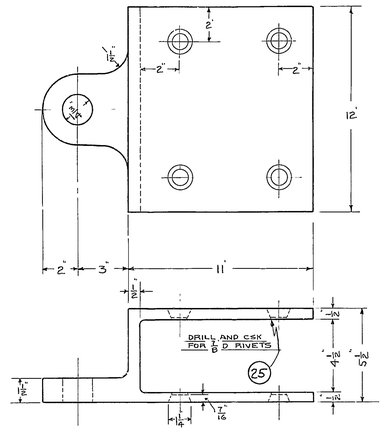

FIGHTING BOLT PAD ON CARRIAGE
SCALE 3" = 1FT
(1)

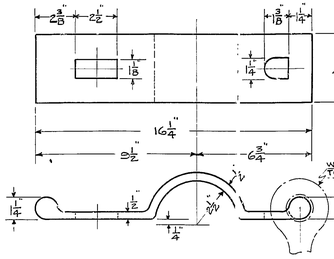

CAPSQUARE
SCALE 3" = 1FT.
(6)

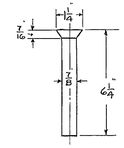

RIVETS
(25)

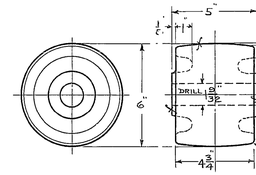

FORE TRUCKS
SCALE 3" = 1FT.
(10)

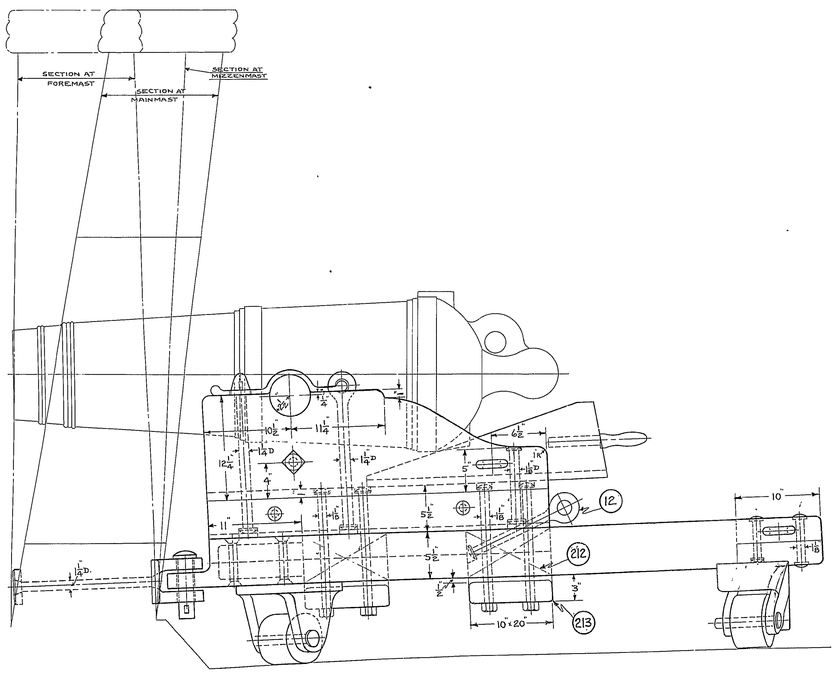

GENERAL ARRANGEMENT
SCALE 1/2" = 1FT.

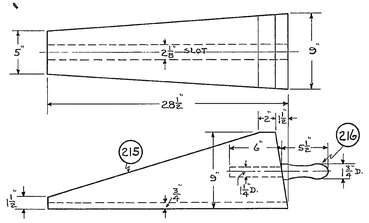

COIN
SCALE 1/2" = 1FT.

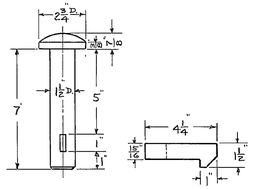

FIGHTING BOLT AND KEY
SCALE 3" = 1FT
(3) (4)

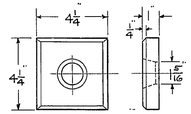

WASHER
(5)

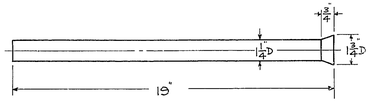

RIVET THRU SIDE OF SHIP
(26)

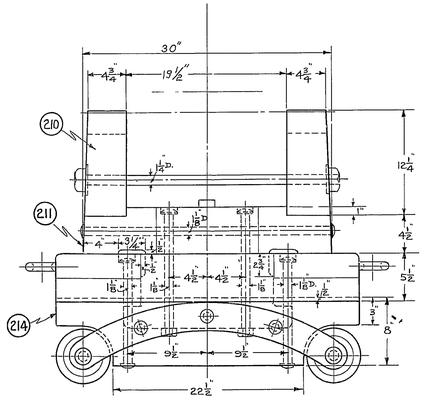

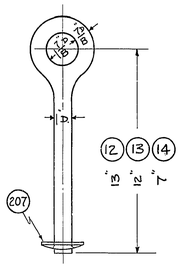

TRAINING - OUTHAUL AND INHAUL BOLTS
SCALE 3" = 1FT.

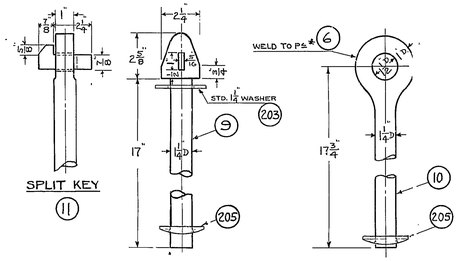

SPLIT KEY
(11)

CAPSQUARE BOLTS
SCALE 3" = 1FT.

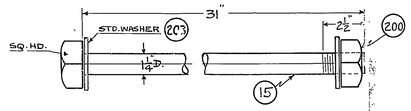

TIE BOLT
SCALE 3" = 1FT.

DRAWING AND TRACING BY
C. S. ADAMS ~ SUPER. DRAFTSMAN MAR. 13, 1931

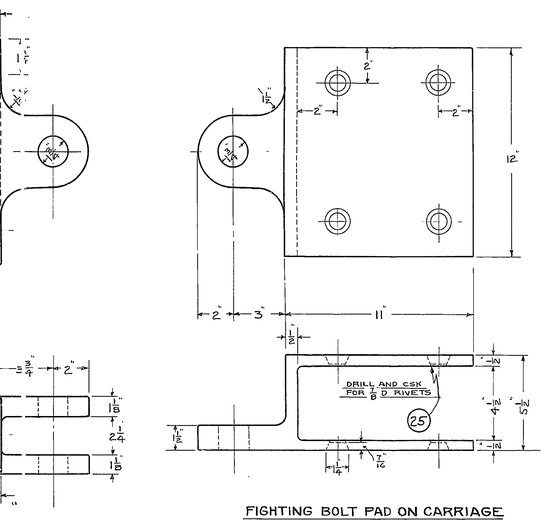

FIGHTING BOLT PAD ON CARRIAGE
SCALE 3" = 1FT.
1

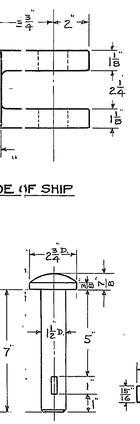

FIGHTING BOLT AND KEY
SCALE 3" = 1FT.
3 4

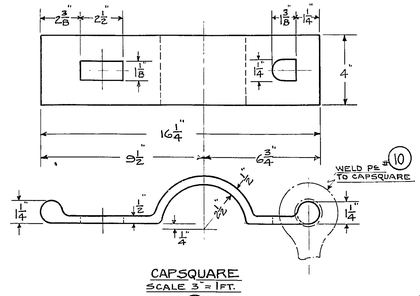

CAPSQUARE
SCALE 3" = 1FT.
6

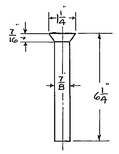

RIVETS
25

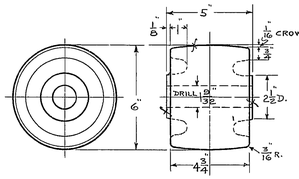

FORE TRUCKS
SCALE 3" = 1FT.
102

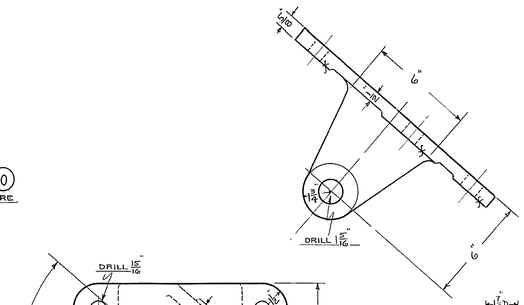

FORE TRUCK BEARING AND BOLTS
SCALE 3" = 1FT.

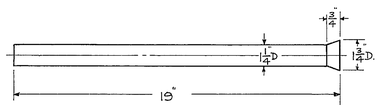

WASHER
5

RIVET THRU SIDE OF SHIP
26

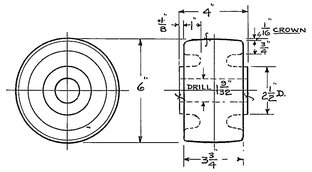

HIND TRUCKS
SCALE 3" = 1FT.
103

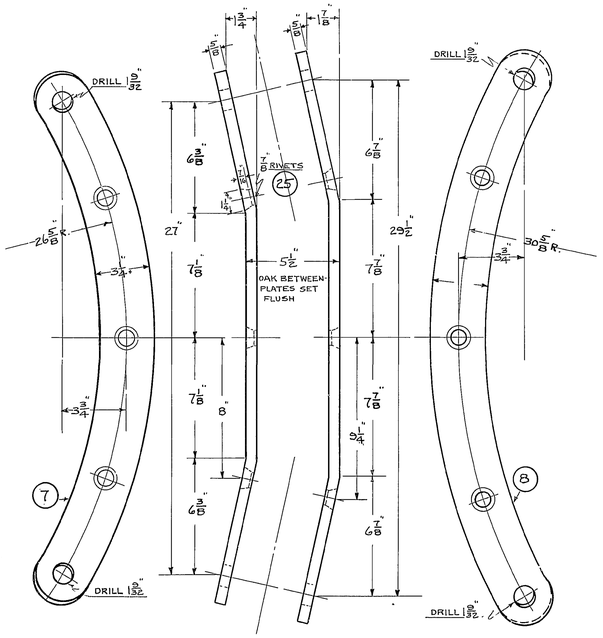

HIND TRUCK BEARINGS
SCALE 3" = 1FT.

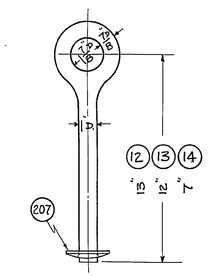

TRAINING - OUTHAUL AND INHAUL BOLTS
SCALE 3" = 1FT.

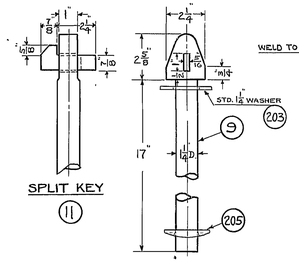

SPLIT KEY
11

CAPSQUARE BOLTS
SCALE 3" = 1FT.

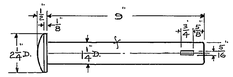

FORE TRUCK PINS
SCALE 3" = 1FT
16

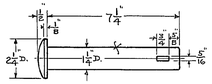

HIND TRUCK PINS
SCALE 3" = 1FT.
17

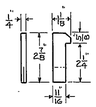

KEY
18

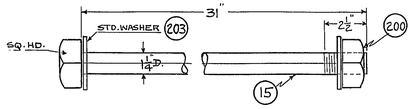

TIE BOLT
SCALE 3" = 1FT.

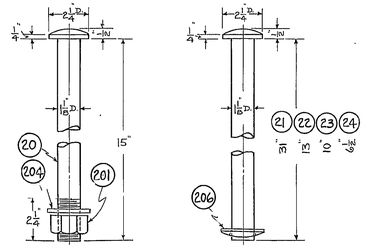

CARRIAGE AND SLIDE BOLTS
SCALE 3" = 1FT.

SCHEDULE OF MATERIAL FOR 20 GUN CARRIAGES

NO.	AMT.	DESCRIPTION	MATERIAL	REMARKS
1	20	FIGHTING BOLT PAD ON CARRIAGE	STL. ALLOY B	
2	20	" " " " SHIP	"	
3	20	" " PIN	"	
4	20	" " " KEY	"	
5	40	SQ. WASHER	"	
6	40	CAPSQUARE	"	
7	20	HIND TRUCK BEARING PLATE	"	
8	20	" " " "	"	
9	40	CAPSQUARE BOLT - 1 1/4" D. x 17" LONG	"	
10	40	" " 1 1/4" D. x 17 3/4" "	"	
11	40	" " KEY	"	
12	20	EYE BOLT - 1" D. - 13" LONG	"	DIE #1140
13	40	" " 1" D. 12" "	"	" "
14	40	" " 1" D. 7" "	"	" "
15	20	TIE BOLT 1 1/4" D. x 31" LONG	"	SQ. HEAD - THREADED
16	40	FORE TRUCK PINS 1 1/4" D. x 9" "	"	
17	40	HIND " " 1 1/4" D. x 7 1/4" "	"	
18	80	TRUCK PIN KEYS	"	
19	160	FORE TRUCK BEARING BOLTS - 7/8" D.	"	THREADED
20	160	CARRIAGE AND SLIDE BOLTS 1 1/8" D.	"	" "
21	40	" " " " 1 1/8" x 31" L.	"	
22	40	" " " " 1 1/8" D. x 13" L.	"	
23	40	" " " " 1 1/8" D. x 10" L.	"	
24	160	" " " " 1 1/8" D. x 6 1/2" L.	"	
25	380	RIVETS - CSK. HD. 7/8" D. x 6 1/4" LONG	"	
26	40	" " " 1 1/4" D. x 19" "	"	
100	20	FORE TRUCK BEARING - RIGHT HAND	CAST STL.	
101	20	" " " LEFT "	" "	
102	40	FORE TRUCKS	COMPO XG	
103	40	HIND "	"	
200	20	1 1/4" SQ. NUTS	STEEL	
201	160	1 1/8" HEX. "	"	
202	160	7/8" " "	"	
203	80	1 1/4" STD. WASHER	"	
204	160	1 1/8" " "	"	
205	80	1 1/4" CLINCH RINGS	"	GAY
206	280	1 1/8" " "	"	"
207	100	1" " "	"	"
208	40	CARRIAGE SIDES - 10" x 5 1/2" x 4'-1"	W. OAK	
209	40	" INBD ENDS 10" x 5 1/2" x 3'-0"	"	OUTBOARD END - 11" x 5 1/2" x 3'-0"
210	40	SLIDE SIDES 12 1/4" x 5" x 3'-4 3/4"	"	
211	60	" BED 10" x 5 1/2" x 3'-4 3/4"	"	
212	40	" FILLING PIECES 10" x 5 1/2" x 1½"	"	
213	40	" CLAMPS 10" x 3" x 20"	"	
214	20	HIND TRUCK BEARING 8" x 8" x 3'-0"	"	
215	20	COIN	"	
216	20	" HANDLES	"	
217	20	" GUIDE	"	

NOTES

1- WOOD JOINTS TO BE MADE UP WITH WHITE LEAD

2- IRON WORK TO BE GIVEN ONE COAT OF RED LEAD BEFORE INSTALLATION

3- COMPLETED CARRIAGES TO BE GIVEN ONE COAT OF PRIMING AND TWO COATS OF BLACK.

REFERENCE PLANS
32 PDR CARRONADE GUN - BOSTON Nº 21250

CORRECTED FOR FINISHED PLAN

RESTORATION 1927-1931

U.S. FRIGATE CONSTITUTION

GUN CARRIAGES
FOR 32 PDR CARRONADES — SPAR DECK

NAVY YARD BOSTON — MARCH 12, 1931

SCALES INDICATED

APPROVED FOR MANAGER

John A. Lord
LIEUT. (C.C.) U.S.N.
SUPT. OF RESTORATION

C&R # 167608

Nº 22364