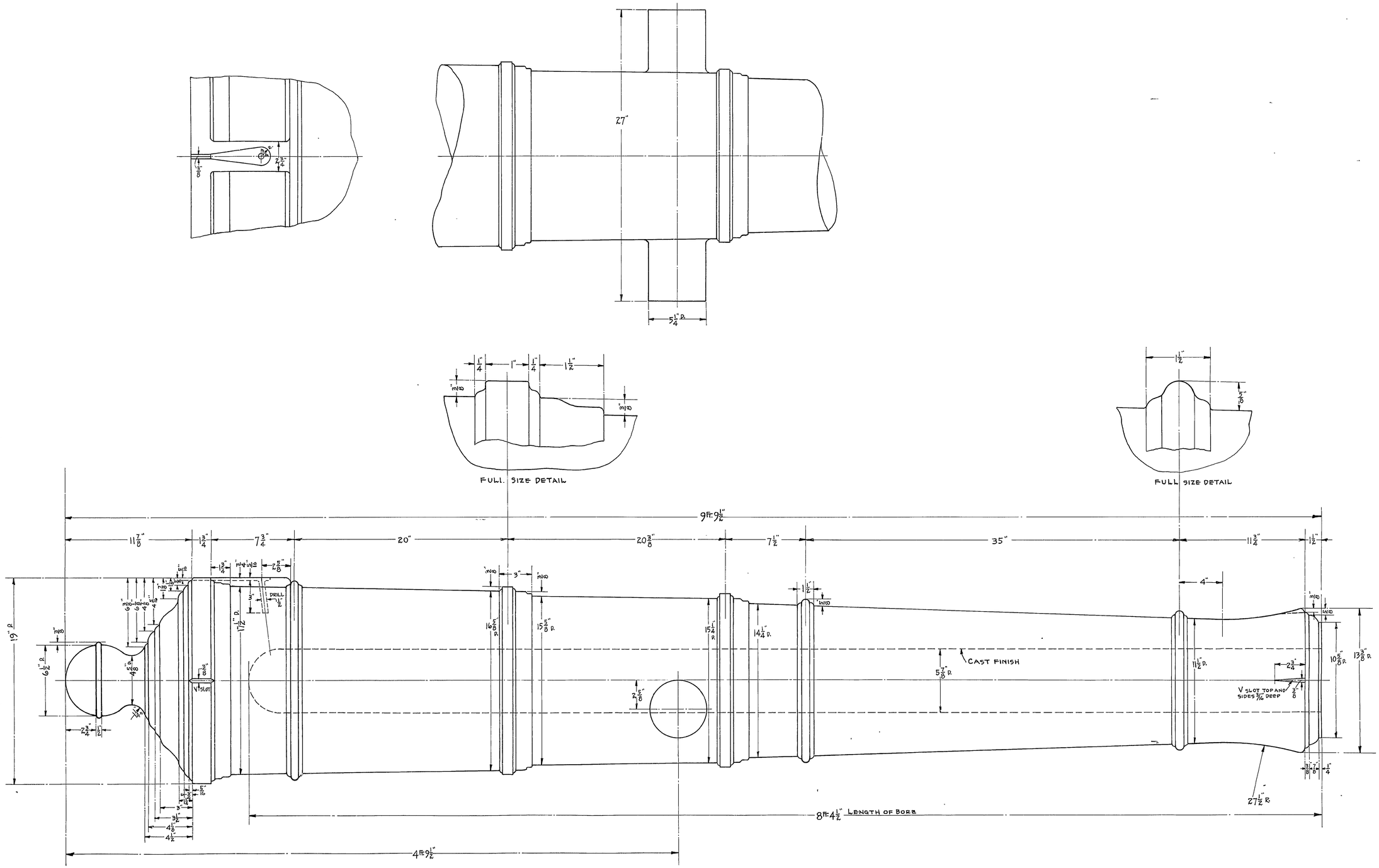

DRAWN BY: C. S. ADAMS
TRACED BY: M. CUNHA

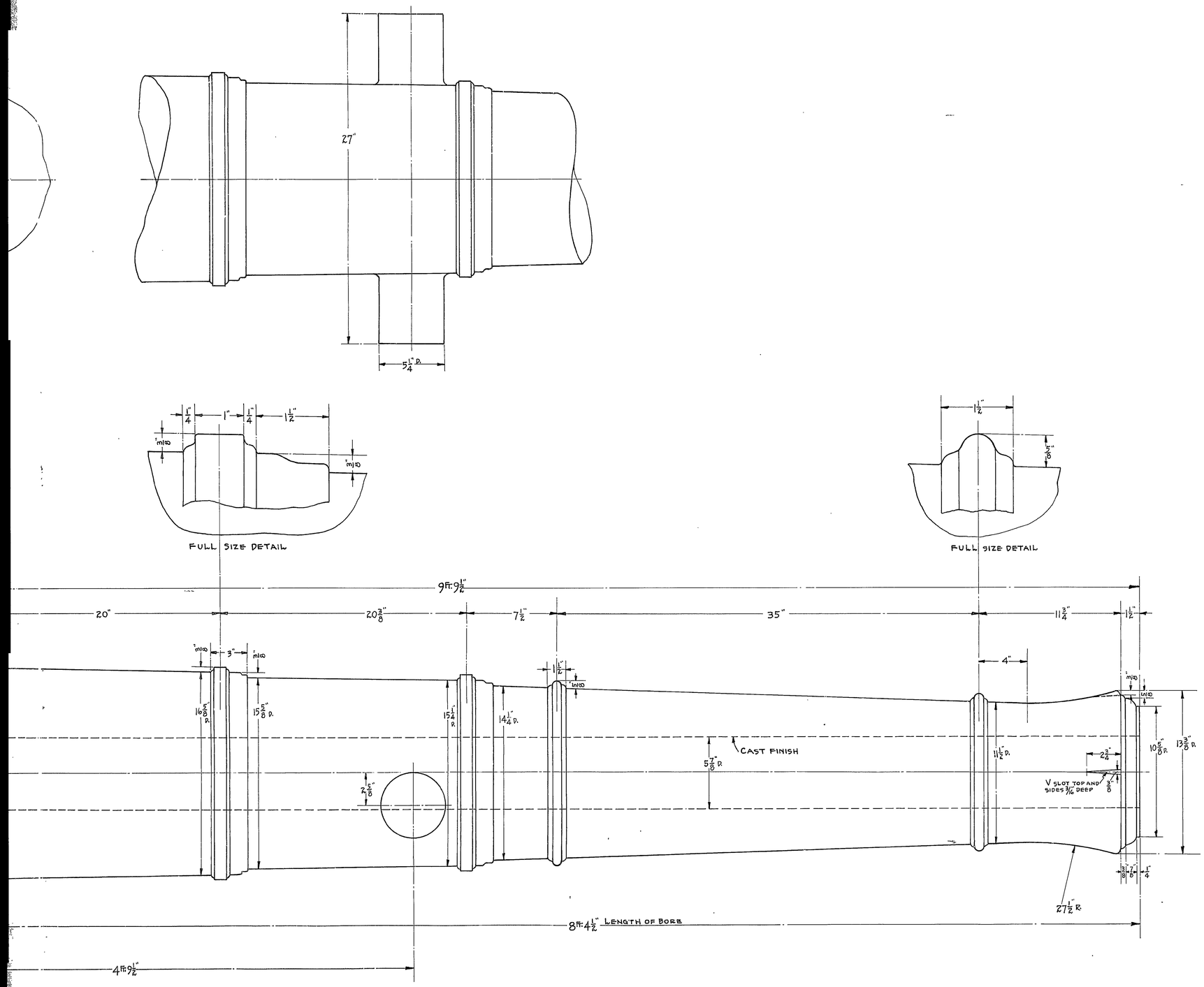

REFERENCE PLANS

24 PDR GUN - ENGLISH TYPE - GUN DECK - BOSTON PLAN #					22128
" " " AMERICAN	"	"	"	"	22129
32 " CARRONADE GUN	SPAR DECK	"	"		21250

GUN CARRIAGES FOR 24 PDR GUNS			BOSTON PLAN #		22130
" " " 32 " CARRONADES			"	"	22364
" " " 24 " BOW CHASERS			"	"	22362

NUMBER REQUIRED - 2
MATERIAL - GREY CAST IRON - CLASS "C"
WT. 4170 LBS EACH

RESTORATION 1927-1931
CORRECTED FOR FINISHED PLAN

U.S. FRIGATE CONSTITUTION

24 PDR GUN - BOW CHASER
(18 PDR GUN BORED FOR 24 PDR)

NAVY YARD, BOSTON — JAN. 1931

SCALE: 3" 12" = 1 FT.

APPROVED FOR MANAGER
John O'H. Lord
LIEUT. (C.C.) U.S.N.
SUPT. OF RESTORATION

N° 22361

C&R # 167613