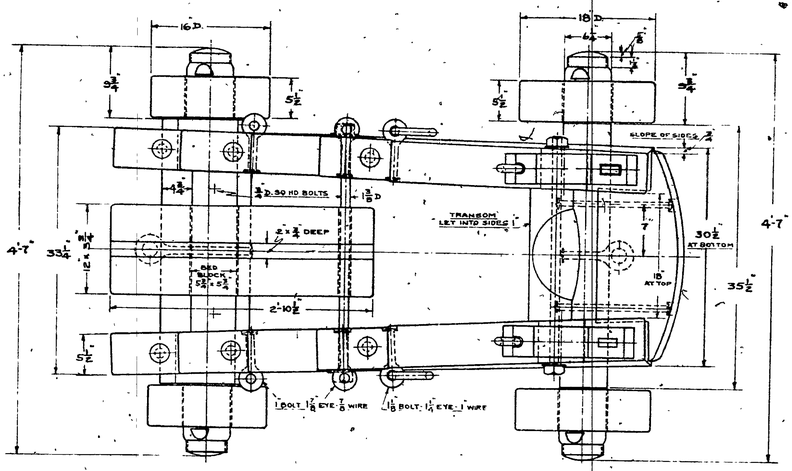

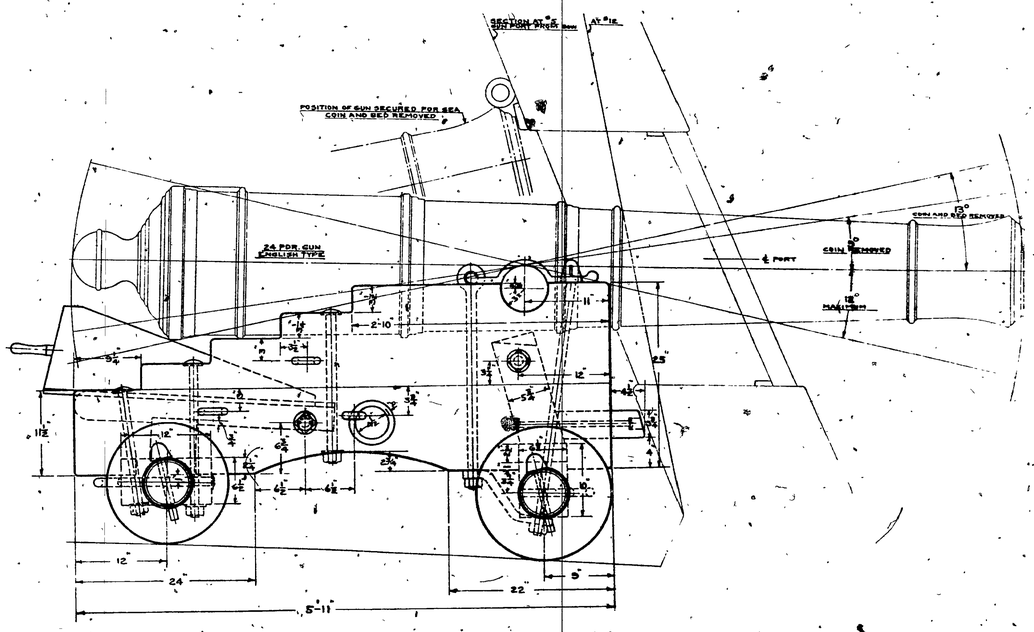

CARRIAGE FOR 24 PDR. GUN - ENGLISH TYPE

18 REQUIRED

LOCATION — GUN DECK - PORTS 4 TO 12 INC. PORT AND STBD.

SCALE

102351—32. No. 5

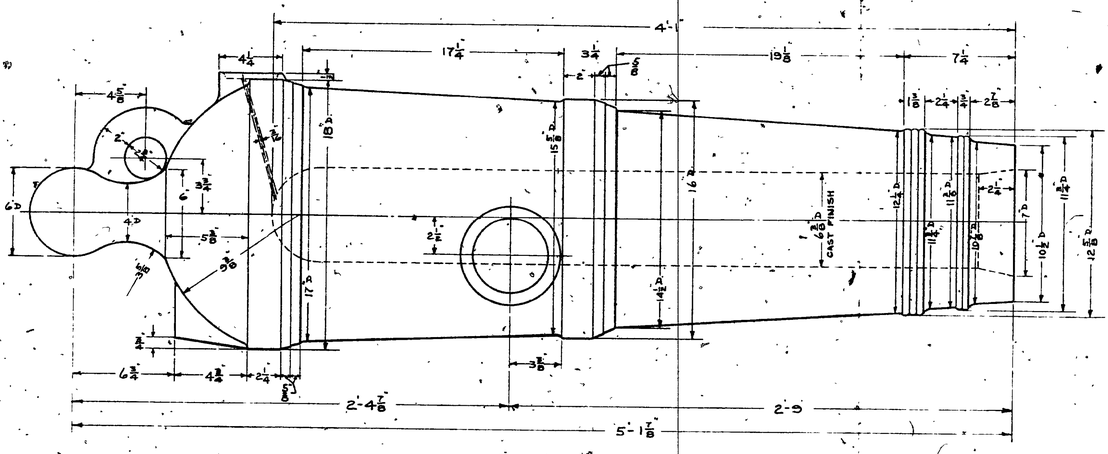

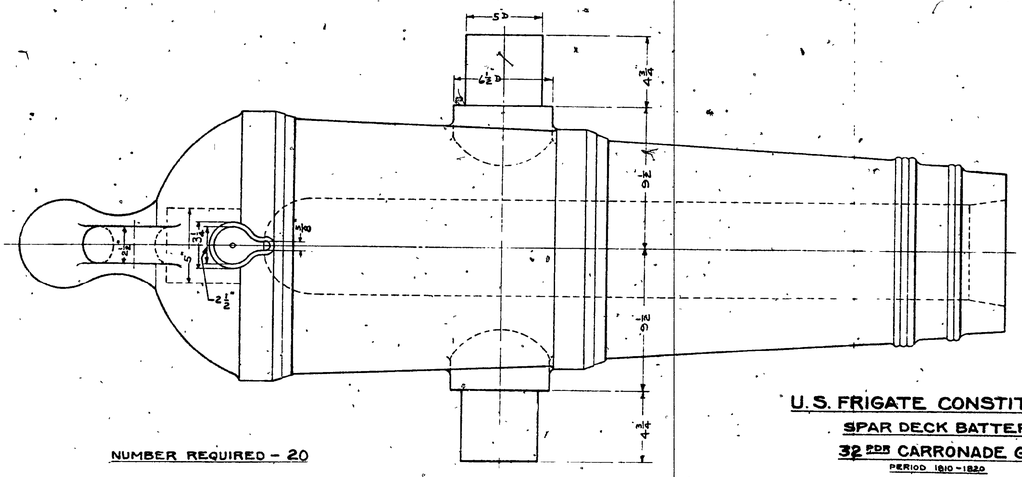

NUMBER REQUIRED - 20

SCALE

U.S. FRIGATE CONSTITUTION

SPAR DECK BATTERY

32 PDR CARRONADE GUN

PERIOD 1810-1820

THIS DESIGN OF GUN IS THE RESULT OF CAREFUL STUDY AND RESEARCH AND REPRESENTS THE TYPE OF GUN CARRIED BY U.S. FRIGATES OF THE 1812 PERIOD.

102351—32. No. 4