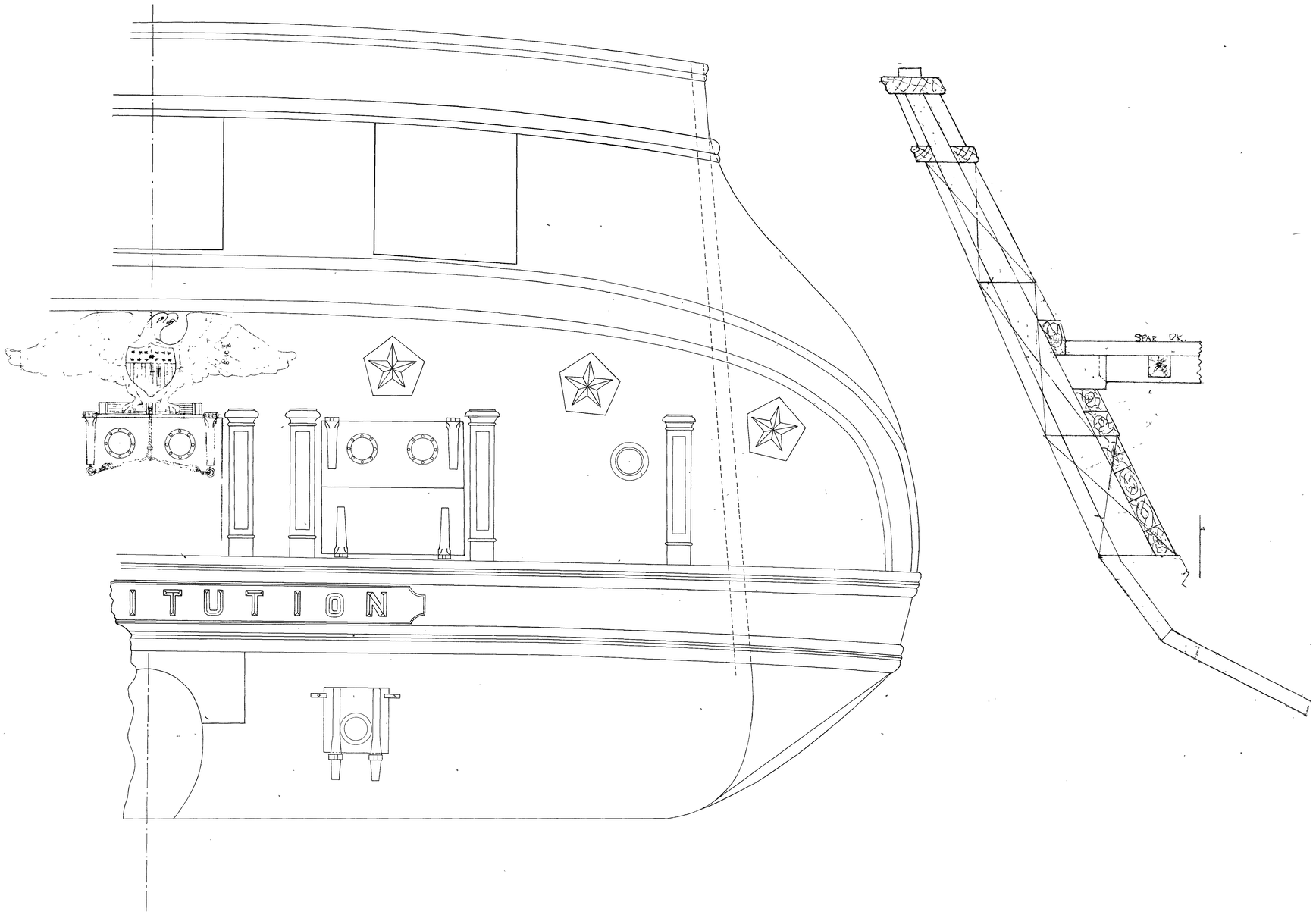

~~USS~~
U.S.F. CONSTITUTION
STERN EXPANSION
21239

SPARE