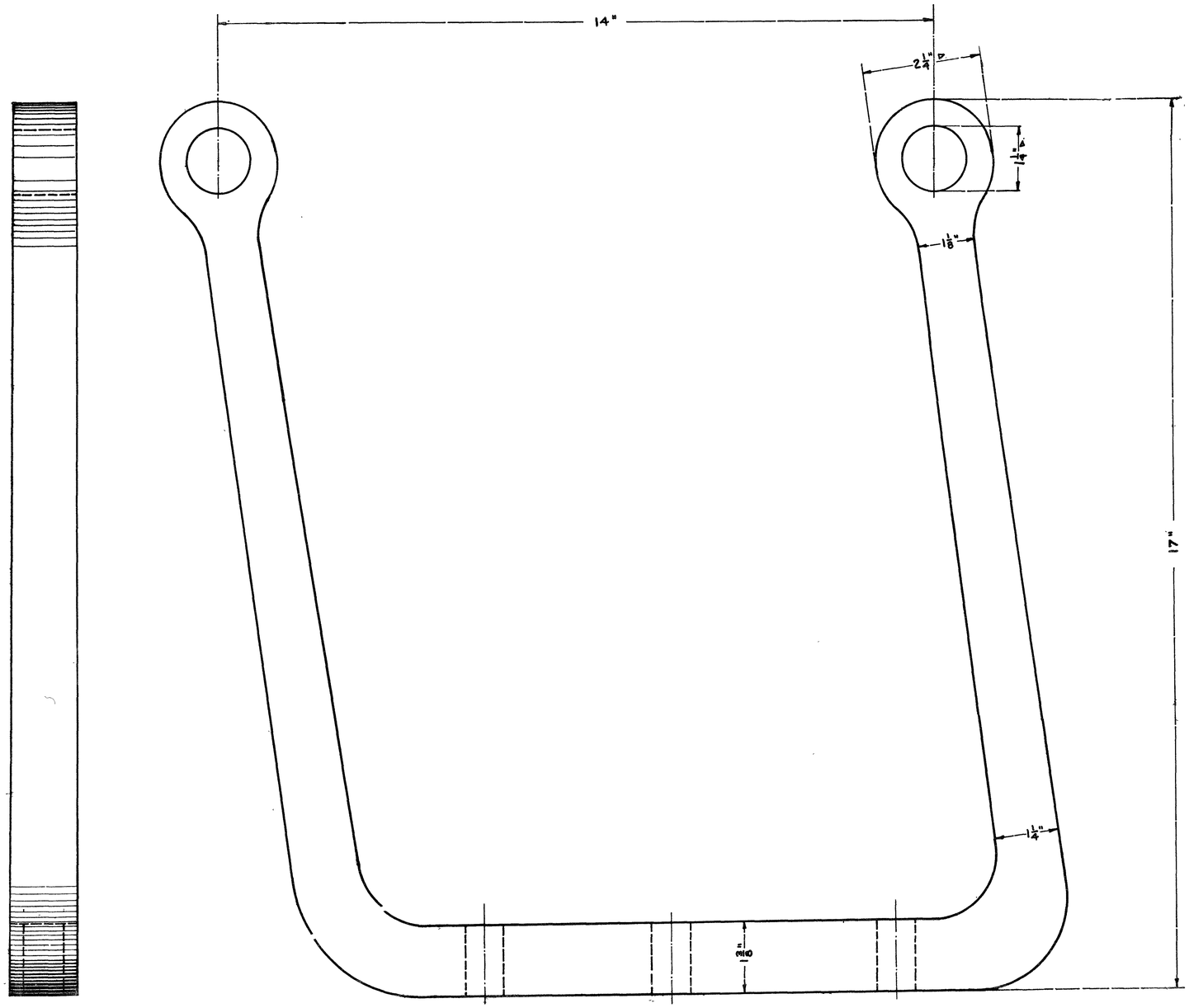

NOTE: ALL FORGINGS TO BE 17" HEIGHT ON THE VERTICAL.
ALL HAMMOCK STOWAGE FORGINGS TO BE GALVANIZED.

RESTORATION 1927

U.S. FRIGATE CONSTITUTION
HAMMOCK STOWAGE FORGINGS

NAVY YARD BOSTON. MAR 1928

SCALE: FULL SIZE

APPROVED FOR MANAGER
John A. Lord
LIEUT. (C.C.) U.S.N.
SUPT. OF RESTORATION.

DRAWN BY: Wm. Liebmann
TRACED BY:

NO. 19043

#19043

1X21-19043