FOR DETAILS NOT SHOWN SEE:
SEE DETAIL "27–A"

NOTE: RAILS & STILES ARE $1\frac{3}{4}$" THICK

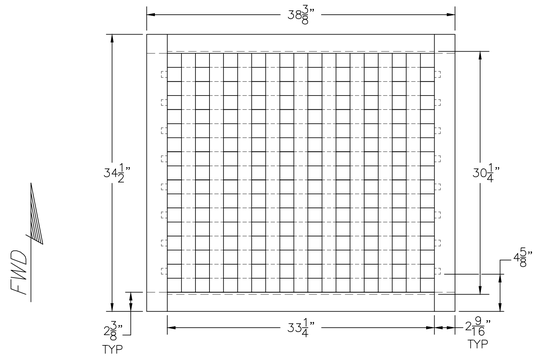

PLAN VIEW "37–D"

FWD SHIPS WHEEL HATCH GRATING

ALL MATERIAL TO BE ASH

SCALE: 1–1/2"=1'–0"

FOR DETAILS NOT SHOWN SEE:
SEE DETAIL "27–A"

NOTE: RAILS & STILES ARE $1\frac{3}{4}$" THICK

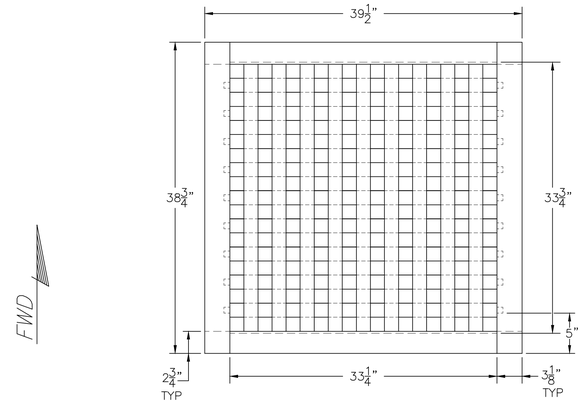

PLAN VIEW "34–D"

FWD FORE MAST HATCH GRATING

ALL MATERIAL TO BE ASH

SCALE: 1–1/2"=1'–0"

FOR DETAILS NOT SHOWN SEE:
SEE DETAIL "27–A"

NOTE: RAILS & STILES ARE $1\frac{3}{4}$" THICK

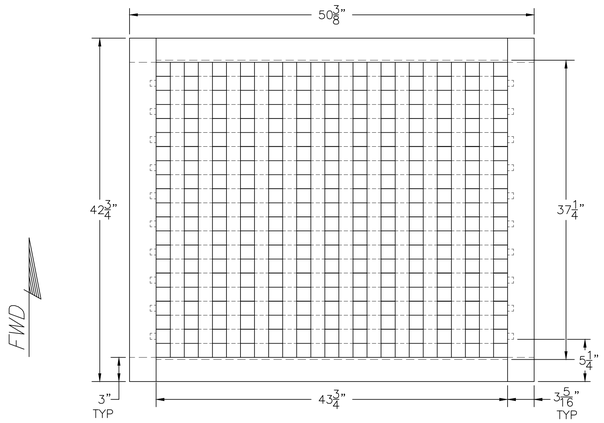

PLAN VIEW "37–A"

AFT FORE MAST HATCH GRATING

ALL MATERIAL TO BE ASH

SCALE: 1–1/2"=1'–0"

FOR DETAILS NOT SHOWN SEE:
SEE DETAIL "27–A"

NOTE: RAILS & STILES ARE $1\frac{3}{4}$" THICK

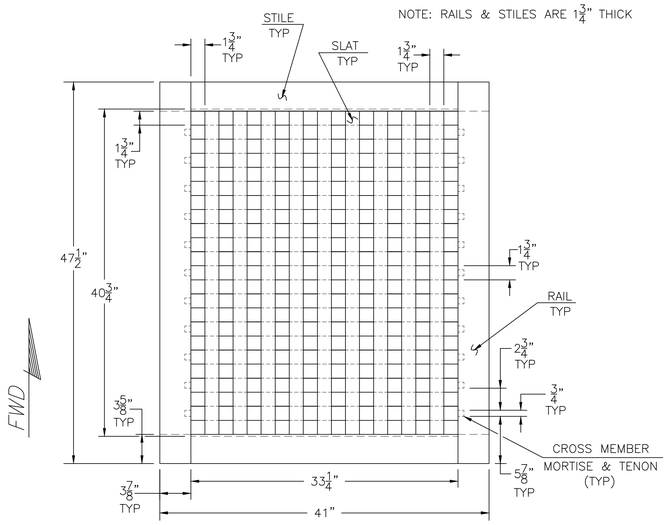

PLAN VIEW "34–A"

BOW SPRIT HATCH GRATING

ALL MATERIAL TO BE ASH

SCALE: 1–1/2"=1'–0"

DISTRIBUTION LIMITED TO DEPT. OF DEFENSE AND U.S. DOD CONTRACTORS; ADMINISTRATIVE OR OPERATIONAL USE. OTHER REQUESTS FOR THIS DOCUMENT SHALL BE REFERRED TO COMMANDER, NAVAL SEA SYSTEMS COMMAND (SEA 09B2), WASHINGTON, D.C. 20362–5101.

SIZE	N.H.H.C. DET BOSTON DRAWING NO.	REV
F	002–02–2010	–
SCALE: AS NOTED		SHEET 5