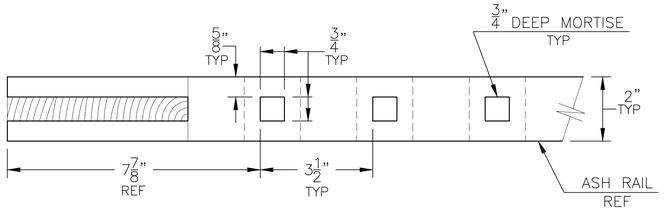

DETAIL "31–F"

TYPICAL MORTISE
SCALE: 6"=1'–0"
(27–A)

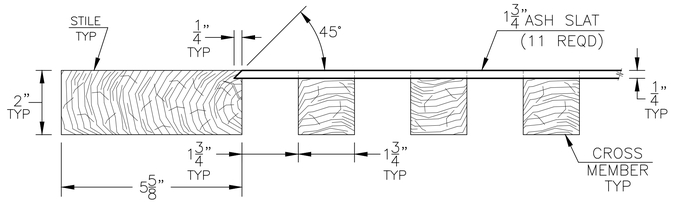

DETAIL "31–E"

TYPICAL GROOVE JOINT
SCALE: 6"=1'–0"
(27–A)

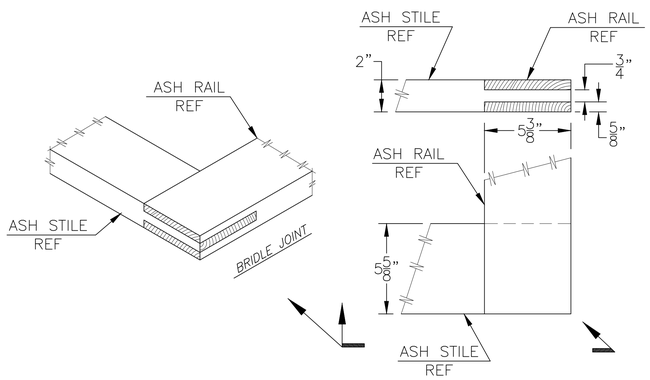

DETAIL "31–C"

TYPICAL BRIDLE JOINT
SCALE: 3"=1'–0"
(27–A)

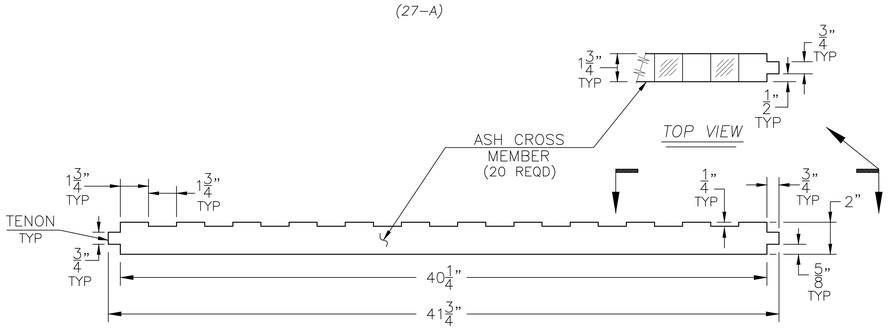

DETAIL "31–A"

TYPICAL CROSS MEMBER
SCALE: 3"=1'–0"
(27–A)

NOTE: ALL MATERIAL TO BE ASH

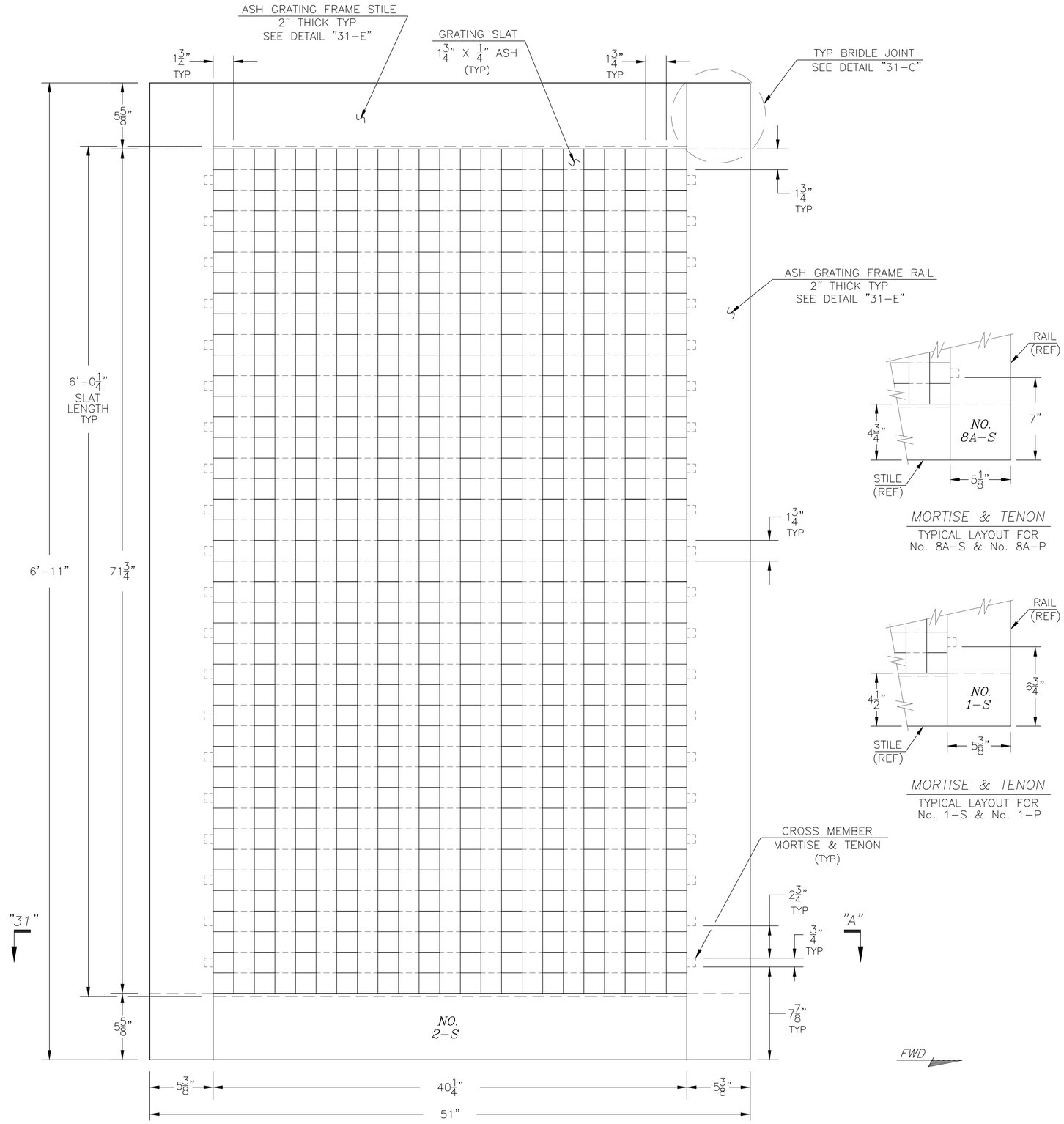

DETAIL "27–A"

TYPICAL HATCH GRATING
SCALE: 3"=1'–0"
(20–A)

DISTRIBUTION LIMITED TO DEPT. OF DEFENSE AND U.S. DOD CONTRACTORS; ADMINISTRATIVE OR OPERATIONAL USE. OTHER REQUESTS FOR THIS DOCUMENT SHALL BE REFERRED TO COMMANDER, NAVAL SEA SYSTEMS COMMAND (SEA 09B2), WASHINGTON, D.C. 20362–5101.

SIZE	N.H.H.C. DET BOSTON DRAWING NO.	REV
F	002–02–2010	–
SCALE: AS NOTED		SHEET 4