There are three P-100 dewatering pumps that are located throughout the ship. These pumps were immediately used in conjunction with both PERI-Jet and S-type eductors to dewater in both AMR 1 and AMR 2. The crew noticed that part of the flooding in AMR 1 was coming from a lagging pad in a section of the Bleed Air piping in the space. When they pulled off the lagging pad, they discovered that flange bolts on the Bleed Air header underneath it were loose. They were subsequently tightened them and the leak was stopped. There was also water leaking through the stuffing tubes for the electrical cabling in the space. The water level in AMR 2 was reduced to 27 inches (using three PERI-Jet Eductors) prior to the space being flooded out completely on 15 October. At 0100 on 15 October, members of the crew heard a noise and discovered that the flooding in AMR 2 had increased significantly. A total of three PERI-jet and three S-type eductors were used to combat the flooding. The crew stated that they experienced a few problems in the use of the P-100s. First, they stated that the P-100 did not have the adequate horsepower to draw a sufficient suction head for dewatering all main spaces. After trying many different configurations of pumps and eductors, the Portable Exothermic Cutting Unit was used to cut a hole in the hull in MER 2 to allow the discharge to go directly over the side in order to reduce the static head. By using a PERI-jet eductor drawing suction from the bilge with its seawater supply drawing suction through the hole in the hull, fairly efficient dewatering was able to be established.

One of the attempted configurations was to rig 2 P-100s in tandem. Ship's force could not locate the required three 2 1/2 inch double female adapters that are required to carry that out.

The discharge valve on one of the pumps seized, but was repaired within minutes.

The exhaust hose for the P-100 was very short and ship's force used the LM2500 exhaust ducting for the exhaust path. The crew experienced 100% reliability in the use of both PERI-jet and S-type eductors.

b. <u>Portable Hydraulic Access and Rescue System (PHARS)</u>

The Portable Hydraulic Access and Rescue System (PHARS), similar to the "Jaws of Life", was utilized to free personnel who were trapped. Most of the PHARS use was in the Chief Petty Officers Mess. The crew stated that this piece of damage control gear was invaluable, and that they experienced 100% reliability. The crew also stated that the PHARS performed extremely well in all applications.

c. Portable Exothermic Cutting Unit (PECU)

The Portable Exothermic Cutting Unit was used on 15 October to cut a hole in the hull of the ship in MER 2. The hole allowed the PERI-jet eductor connected to P-100 to successfully operate, because adequate suction head was established. Conscious effort was made to minimize any usage of the PECU due to the extensive fuel oil smell that had permeated the ship in days previous. The Damage Control Assistant conducted a gas free test prior to the usage of the PECU and the results of the test showed that a safe atmosphere existed for its use.

d. Shoring

Shoring was used to support the aft bulkhead of AMR 1 and the fwd bulkhead of MER 2. All wooden and metal shoring was expended in this effort. The training that the crew received during the damage control week at the beginning of the cruise proved to be invaluable. The crew reported no difficulty in using the equipment.

e. Communication Equipment

Interior Voice Communication System (IVCS) and the General Announcing System (1MC) were disabled at the onset of the explosion. IVCS was not restored and the 1MC was restored at 1041 on 13 October. The only communications achieved on Wireless Communication (WIFCOM) was between CCS and Repair 3. The 25MC in CCS was used to communicate with CSMC. Various X5J circuits (salt and pepper lines) were rigged along the damage control deck to supplement the primary communication circuit, the Wireless Internal Communication System (WICS). WICS proved to be 100% reliable and played a critical role in keeping key personnel abreast of all damage reports and repair efforts. The coordination of stabilizing wounded personnel into localized

triage areas throughout the ship could not have been accomplished without WICS.

f. Desmoking

The smoke from the explosion dissipated quickly and the need for portable desmoking equipment was not present. In the days following the explosion; however, the box fans and Ram Fans 2000 were used to provide ventilation throughout the ship as many installed ventilation systems were damaged or without power.

g. Personal Flashlights

Just prior to commencing the deployment, the Chief Engineer purchased each of her engineers a flashlight. The use of these flashlights not only provided lighting during periods of darkness, they were used by injured personnel to signal crewmembers. These injured crewmembers would not have been discovered without using this signaling technique. Also, an oil laboratory person used her flashlight to swim back into the oil laboratory to search for the Main Propulsion Assistant after the initial explosion.

h. Emergency Escape Breathing Device(EEBD)/Self- Contained Breathing Apparatus(SCBA)

Upon the onset of the explosion, approximately 20 SCBAs amidships were destroyed. The remaining SCBAs operated flawlessly. The crew commented that the two different size bottles were confusing.

The ship was still equipped with SCOTT EEBD's. The crew reported they performed flawlessly. The only comment on the SCOTT EEBDs was that the pull ring needs to be larger. Concern was expressed that with the OCENCO EEBD lacking any sort of hood, that it would have been difficult to move through smoke filled areas without burning the eyes.

3. Engineering Systems:

The Engineering systems that will be addressed in detail below are only those germane to the damage control effort in COLE. From the time of the explosion, the starboard main drive

train was essentially destroyed while the port main drive train remained intact. The port drive train underwent limited testing on 27 October, by ship's force (GTE started, not clutched in; Main Reduction Gear jacked over; Main Lube Oil System tested, Controllable Pitch System tested) prior to the ship being moved. At that time Navy Sea Systems Command representatives strongly advised the Commanding Officer not to take the port shaft to power for fear of further stressing or damaging the hull. The port shaft was not taken to power.

a. Ship's Service Gas Turbine Generators (SSGTG), Electrical Distribution System, Fuel Service System and High Pressure Air System:

At the time of the attack NRs 2 and 3 SSGTGs were on line in parallel. The electrical distribution system (enclosure (H)) was in a ring bus configuration with all bus tie breakers closed. Ship's force was making preparations to start planned maintenance on NR 1 SSGTG reduction gear, but had not yet started the tag out.

When the explosion occurred, NR 2 SSGTG shut down for reasons unknown (any number of shock related causes are possible). NR 3 SSGTG remained online. The Fault Current Detection System activated (probably due to the destruction/short circuiting of the 1S-2S/2S-1S bus tie in MER 1) opening all bus tie breakers and inhibiting them from being reclosed. Thus, more or less instantly, the ship was reduced to NR 3 SSGTG online, feeding NR 3 switchboard. With the rolling of Automatic Bus Transfer equipment (much of it deranged by the explosion) had power restored to it and there was considerable "arcing and sparking" forward of frame 220. NR 3 SSGTG ran continuously until it was temporarily lost due to fuel starvation at 0305 on 15 October.

NR 1 switchboard was undamaged by the explosion, but much of the equipment fed by it was deranged, creating many grounds. NR 1 SSGTG itself was undamaged, but its fuel source (NR 1 GTG Fuel Gravity Feed Tank (FGFT); 2-174-2-F) is located in MER 1 and it was determined that it may have been compromised. Additionally, with the destruction of MER 1 and the NR 1 fuel oil service system (enclosure (I)), there was no fuel source to fill the NR 1 FGFT had it been intact. As a matter of note, the NR 1 and NR 2 FGFTs are capable of providing

fuel for approximately 45-60 minutes of SSGTG operation without being replenished. NR 3 and NR 1 SSGTGs were used throughout the damage control effort as a source of parts to keep NRs 2 and 3 SSGTGs operational.

NR 2 switchboard, in the DDG 51 class, serves no real function other than as a conduit to link NR 2 SSGTG to the electrical bus. It has no distribution sections and feeds no loads. NR 2 SSGTG was undamaged by the explosion and tested satisfactorily, operationally, by ship's force on the evening of 12 October. It was not needed, and had no easily useable fuel source (All flammable/combustible systems in MER 2 had been secured based on concerns about the potential for a class Bravo fire based on the smell of fuel in the space). Power was restored to NR 2 switchboard in the morning of 13 October, after resetting the fault current detection system and closing the 3S-2S and 2S-3S bus tie breakers. After NR 3 SSGTG was lost on 15 October ship's force attempted to start NR 2 SSGTG. The High Pressure Air Flasks in MER 2 (enclosure (J)) were empty, so start air was provided by aligning the flasks in NR 3 Generator Room to the High Pressure Air Main. There was insufficient HP air pressure to start the engine. It was additionally discovered that the switchboard batteries (installed to provide power to the SSGTG Local Operating Panel (LOCOP) and the engine igniters to allow the SSGTG to be started in the event of a loss of power) were dead. The HP air from MER 2 was most likely lost through a leaking check valve on the fill side of the bottles into the damaged portion of the HP air system in MER 1. Power was restored at 0005 on 16 October. That evening, another attempt was made to start NR 2 SSGTG. Divers had, in the meantime, isolated the HP air system (enclosure (J)) in MER 2 from the damaged section in MER 1 by closing an isolation valve (HP-V-67) in Supply Support. Ship's force had refilled the HP air flasks using NR 2 High Pressure Air Compressor (HPAC). Batteries were obtained from the USS DONALD COOK and NR 2 SSGTG was started for operational test at 1910 on the 16th. It had to be shut down within a few minutes based on a high module temperature (288 degrees Fahrenheit). It was later determined the cause was a jammed three-way valve that prevented the fifth and 10th stage bleed air valves from closing as required during the start. This casualty was later corrected by ship's force. NR 2 SSGTG was not used again until shortly before the ship was moved when a class Charlie fire occurred in the casualty power breaker on NR 3 switchboard, placing NR 3 SSGTG out of

commission. When the ship was placed on the BLUE MARLIN, NR 2 SSGTG was the only generator in commission.

NR 3 SSGTG, as stated above, ran continuously from before the explosion until it stopped at 0305 on 15 October. It stopped from fuel starvation. Ship's force reported they discovered that the SSGTG was burning more fuel from its Fuel Gravity Feed Tank (FGFT) then they were putting in. The NR 3 FGFT was aligned, initially, to be filled from the JP-5 transfer system (enclosure (11)) located in NR 3 Generator Room. There was no Engineering Operating Procedure (EOP) for this alignment and ship's force worked it out from the system diagram. Ship's force would estimate how much fuel the SSGTG was burning and replace it. They had no method to monitor the NR 3 FGFT level due to the loss of the Fuel Control Console (in the Oil Laboratory) during the initial explosion.

After NR 3 SSGTG flamed out it required a "wet motor" to reprime the fuel system. Ship's force motored the SSGTG once and then attempted a start. A combination of air remaining in the fuel system and low HP air pressure prevented the SSGTG from starting. Over the course of the day two Self-Contained Breathing Apparatus (SCBA) compressors (diesel powered) were used to refill the NR 3 Generator Room HP Air Flasks via their gage lines (using fittings provided by U.S. Navy divers from Mobil Diving Salvage Unit TWO). Once the bottles were sufficiently charged NR 3 SSGTG was successfully restarted at 0005, 16 October and power was restored to NRs 2 and 3 switchboards. NR 3 was lost again at 1424 on 16 October due to fuel starvation, but was stopped (main fuel valves closed) prior to losing the prime on the fuel system and was immediately restarted.

At this point, ship's force reconfigured their fuel system alignment (enclosure (I)) and started the NR 2 fuel oil service system to feed the NR 2 and NR 3 FGFTs. The system was aligned to automatically fill and then recirculate the overflow through the main service tank that was aligned for suction, requiring no real monitoring of the tank levels. The primary fuel system (F-76) was not utilized because of concerns about the condition of the F-76 fuel transfer piping and the status of the storage tanks. Stability of the ship was also generally easier to manage using the much smaller JP-5 tanks. After 16 October, there were no further fuel system problems.

Subj: ADDITIONAL COMMENTS ON COLE DAMAGE CONTROL AND ENGINEERING SYSTEMS

As an additional point, during the period that power was lost on the 15th and 16th of October, FIFTH Fleet provided two portable generators to help restore power. One was 30 kilowatt and the other was 40 kilowatt. They arrived in a poor state of repair and partially disassembled, requiring ship's force to put them in working order. In any event their capacity was insufficient to operate the ship's HP air compressor in order to recharge the HP air flasks in NR 3 Generator Room.

J. R. MILLER

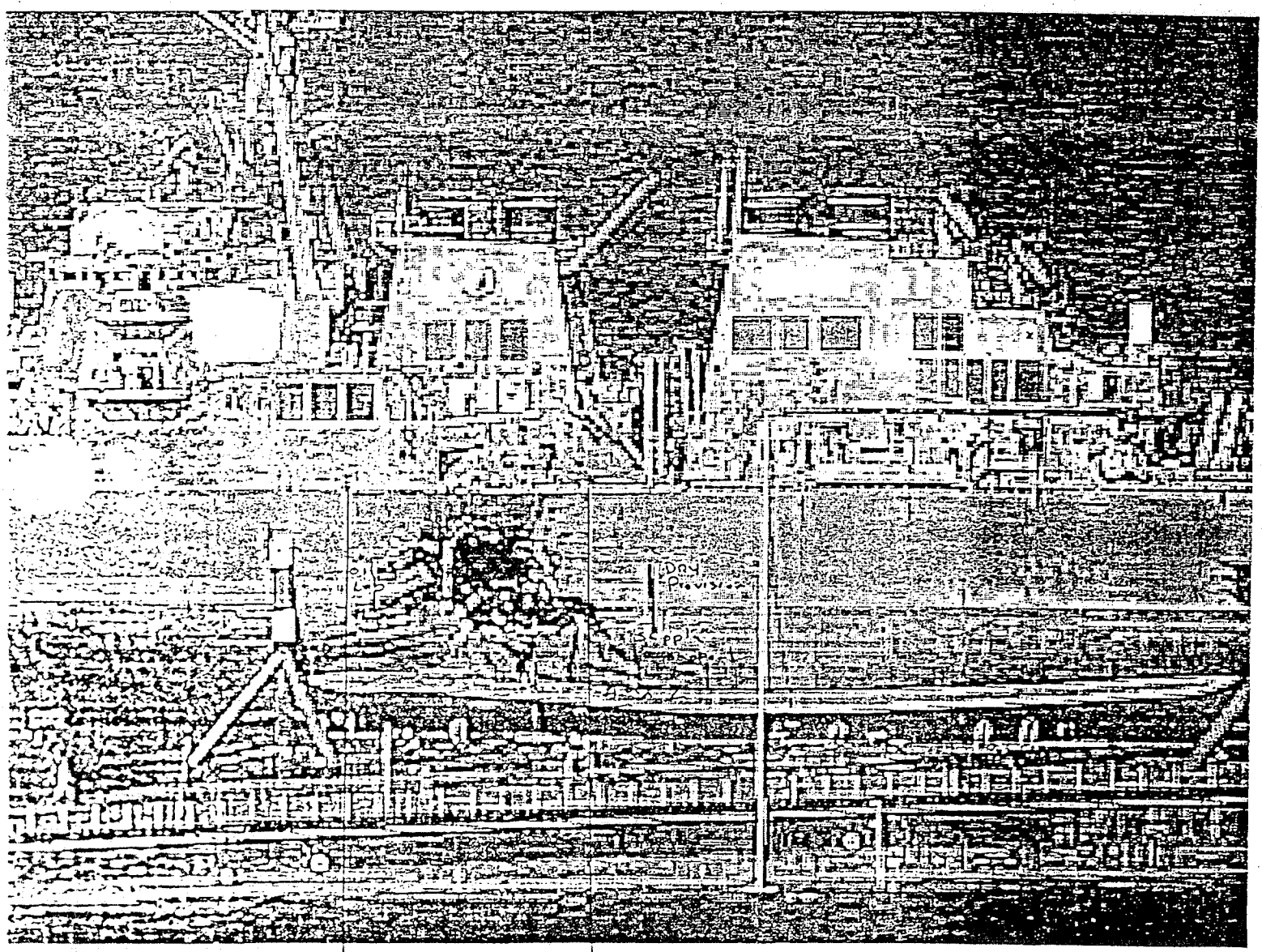
FR 174
FR 220

USS COLE MACHINERY LAYOUT 67

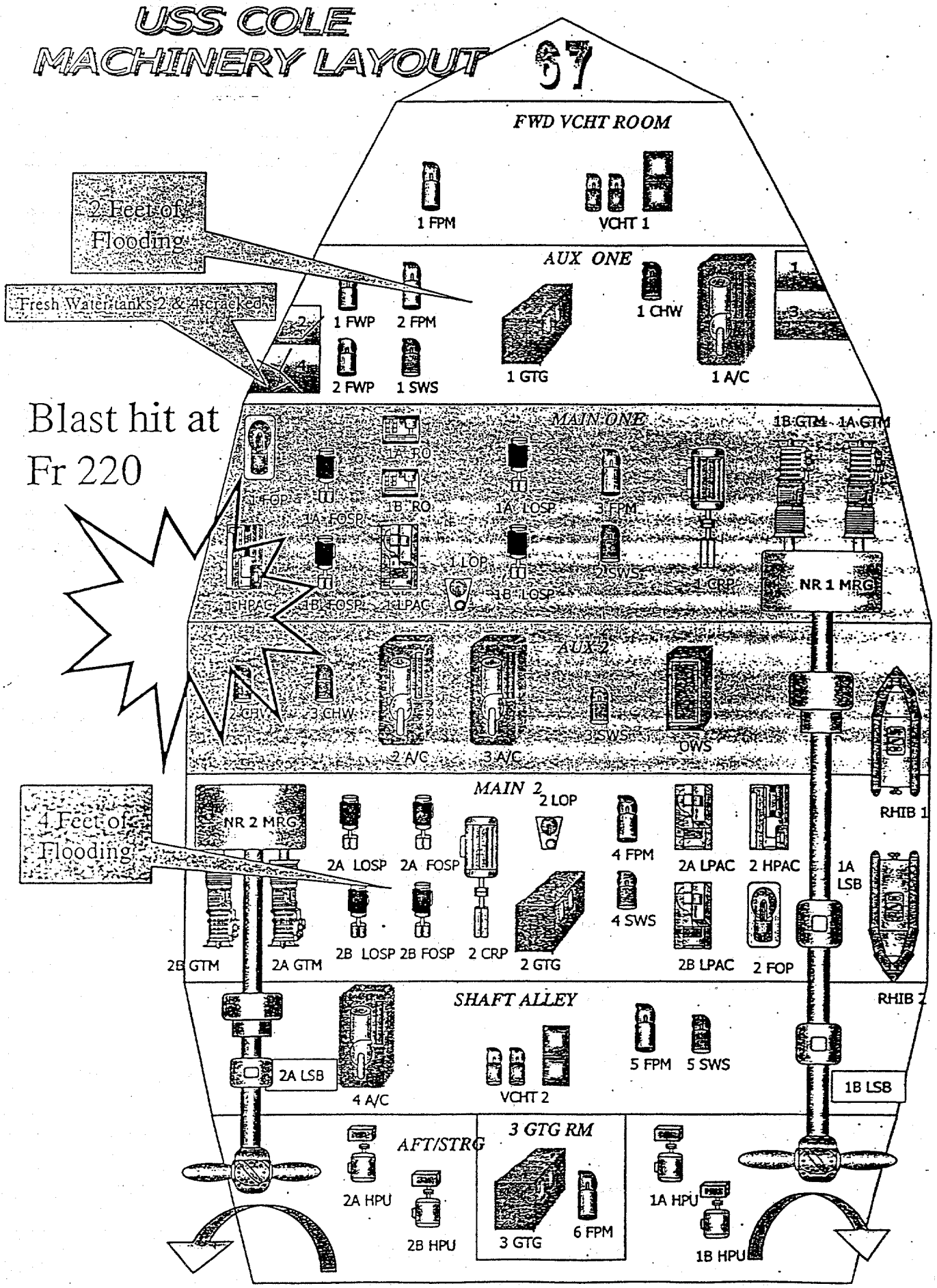

DDG 69 & 71.
DETAIL 70-H

COMMAND MASTER CHIEF OFFICE
CREW/CPO GALLEY
COMBAT SYSTEMS OFFICE
CPO MESSROOM & LOUNGE
FOOD SERVICE OFFICE
INTAKE / UPTAKE E.R. NO.1
REPAIR 5
HALON CYLINDER ROOM NO.1
INTAKE/UPTAKE E.R. NO.2
C.S.E.R. NO.3
POST OFFICE
CREW MESS ROOM
WARD
MEDICAL TREATMENT ROOM
SCULLERY
C.C.S. & DC CENTRAL
ENGRG DEPT OFFICE
FAN ROOM
SONOBOUY STOREROOM
MOVIE PROJECTOR STOWAGE
338 WTRTT
300 WTRTT
254 WTRTT PZ FZ
220 WTRTT
174 WTRTT
LINE OF 01 LEVEL (OVER)
DECON STA NO.2
D.D.D. STA NO.3

CREW LIBRARY
CREW LIVING
CREW WR & SH
PHYSICAL FITNESS ROOM
CREW WR & WC
SPACE NO.3
ENGINE ROOM NO.2
DRY PROVISIONS STOREROOM
SNAP II COMPUTER ROOM
PROV ISSUE ROOM
DEGAUSSING POWER ROOM
REFR MCHRY ROOM
CHILL STRM
FREEZE STRM
GENERAL WORK SHOP
TEST LAB
ENGINEERS STRM
ENGINE ROOM NO.1
FACIL MAINT EQPT STRM
RADIO XMTR ROOM

CREW WR & SH
CREW LIVING SPACE NO.5
CREW WR, VC & SH
ENGINE ROOM NO.2
SUPPLY SUPPORT CENTER
FAN ROOM (CSER NO.2 TOMAHAWK EQPT RM, PWR SPLY/CVRSN RM)
ENGINE ROOM NO.1
CREW WR & SH
CREW LIVING SPACE NO.4
338 WTRTT
300 WTRTT OT
254 WTRTT PZ FZ
220 WTRTT
174 WTRTT
LINE OF FIRST PLATFORM (OV

LUBE OIL SUMP TANK
FUEL SERVICE TANK
FUEL TANK GP 4
ENGINE ROOM NO.2
AUX MCHRY RM NO.2
ENGINE ROOM NO.1
FUEL TANK GP 5
POTABLE WATER
AUX MC

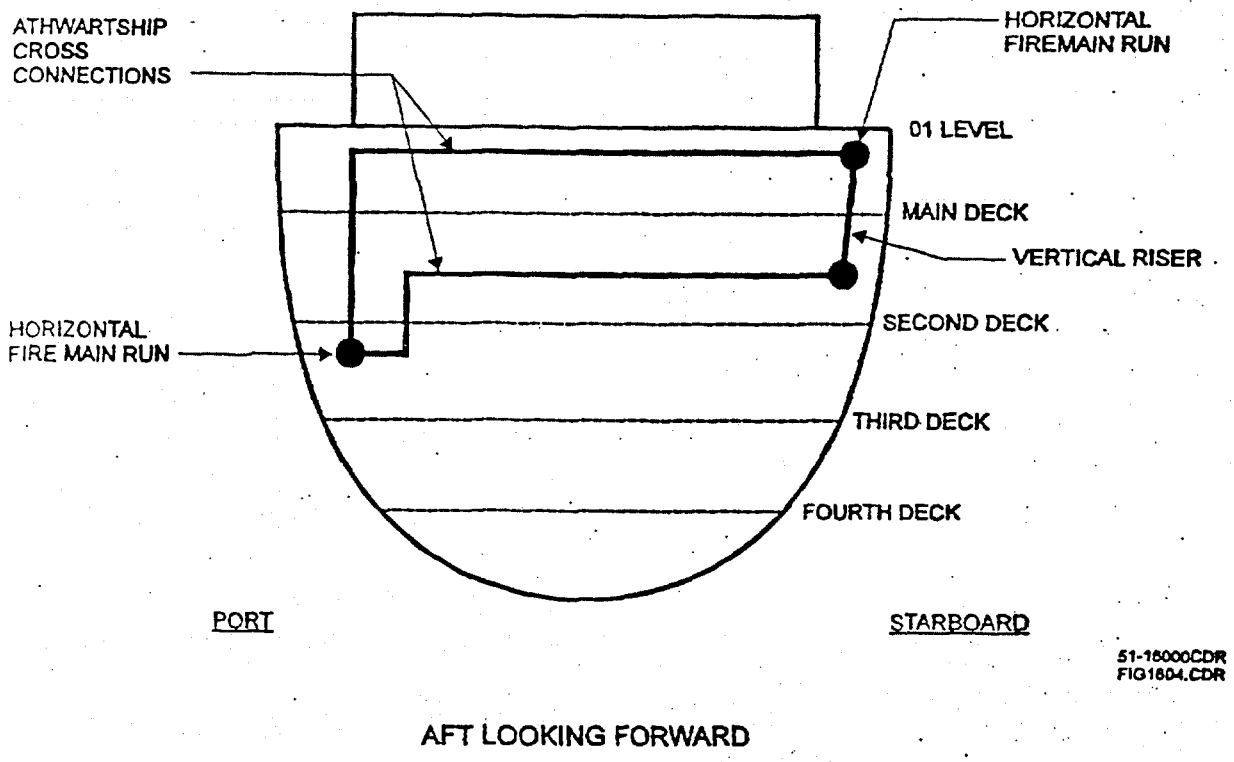

FIGURE 16-4. FIREMAIN ARRANGEMENT

DIAGRAM FOR FIREMAIN SYSTEM

SD...J. DFM

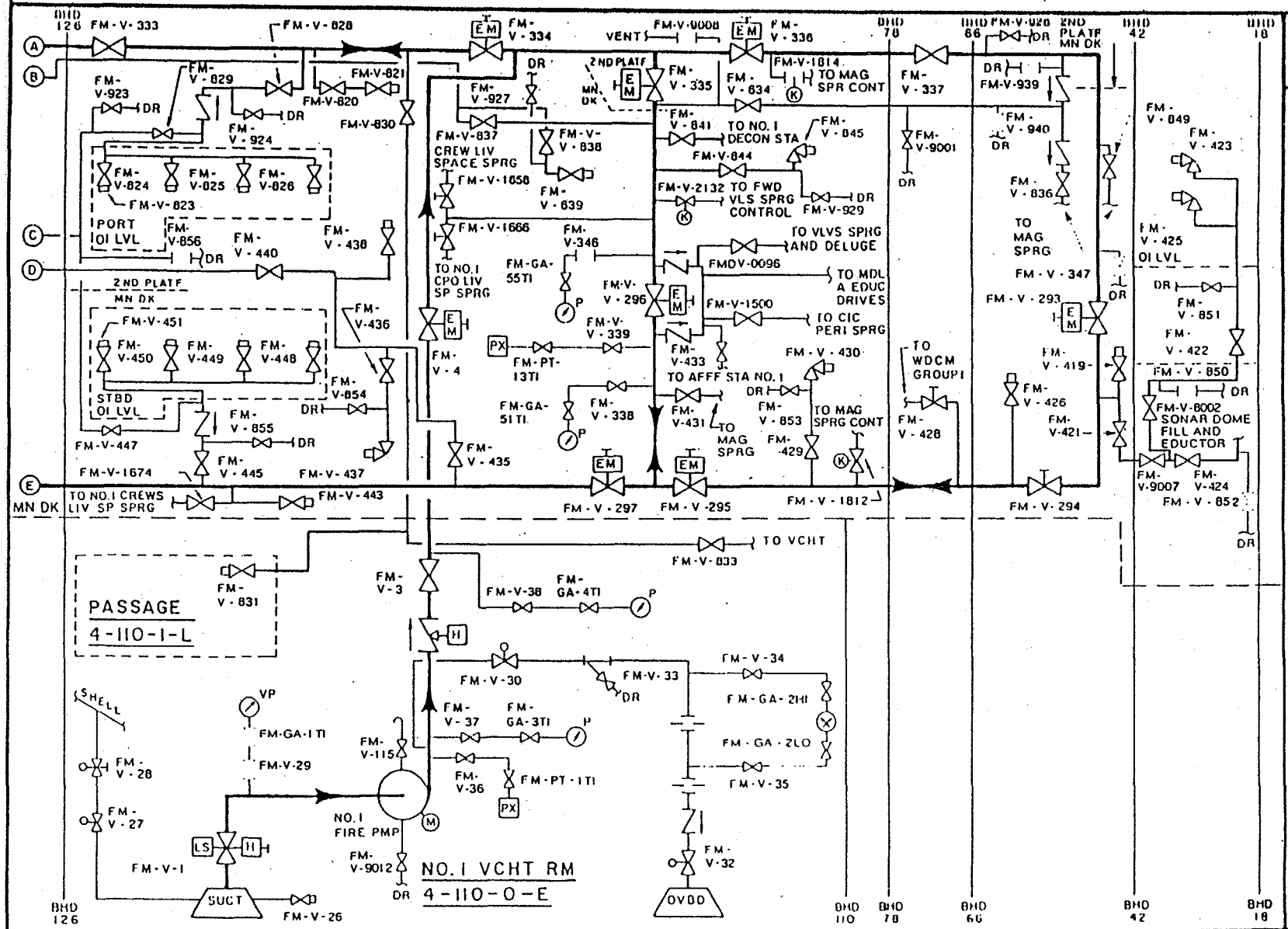

LEGEND

- STOP VALVE
- STOP VALVE, LOCKED OPEN
- STOP VALVE, LOCKED SHUT
- SWING CHECK VALVE
- HYDRAULIC OPERATED WITH MANUAL OVERRIDE
- HYDRAULIC OPERATED
- LIFT CHECK VALVE
- STOP CHECK VALVE
- Y-STRAINER WITH DRAIN
- ANGLE VALVE
- ORIFICE
- HOSE CONNECTION WITH QUICK ACTING STRAINER
- PRESSURE SWITCH
- PRESSURE TRANSDUCER
- DIFFERENTIAL PRESSURE GAUGE
- PRESSURE GAUGE
- VACUUM PRESSURE GAUGE
- ELECTRIC MOTOR OPERATED
- LIMIT SWITCH
- KEY OPERATED

CODE DFM/0789/022696

PAGE 1 OF 6

DFM/0789A

DIAGRAM FOR FIREMAIN SYSTEM

SD. NO. DFM

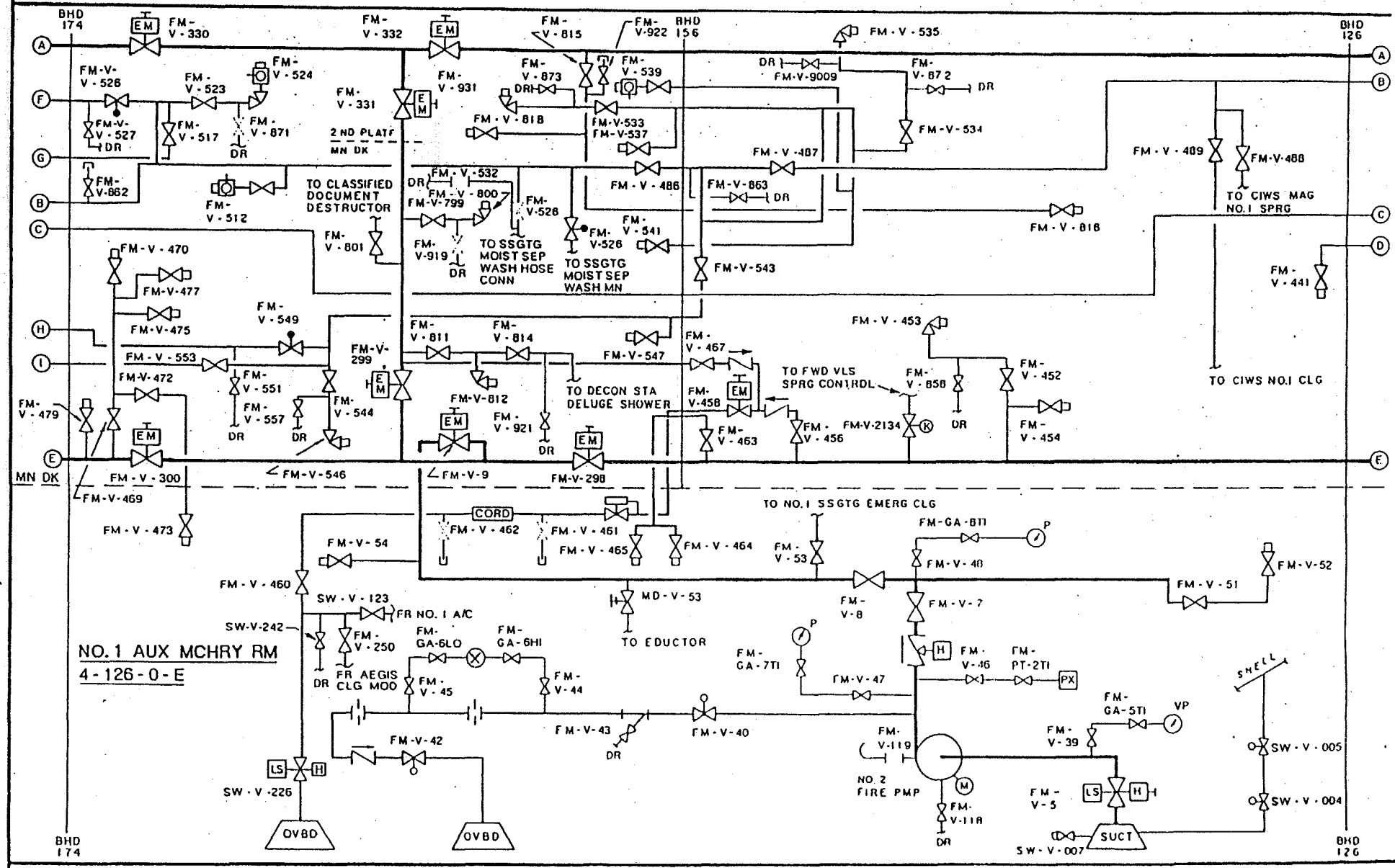

CODE DFM/0789/022696

PAGE 2 OF 6

DFM/0789B

2 of

DIAGRAM FOR FIREMAIN SYSTEM

SD...J. DFM

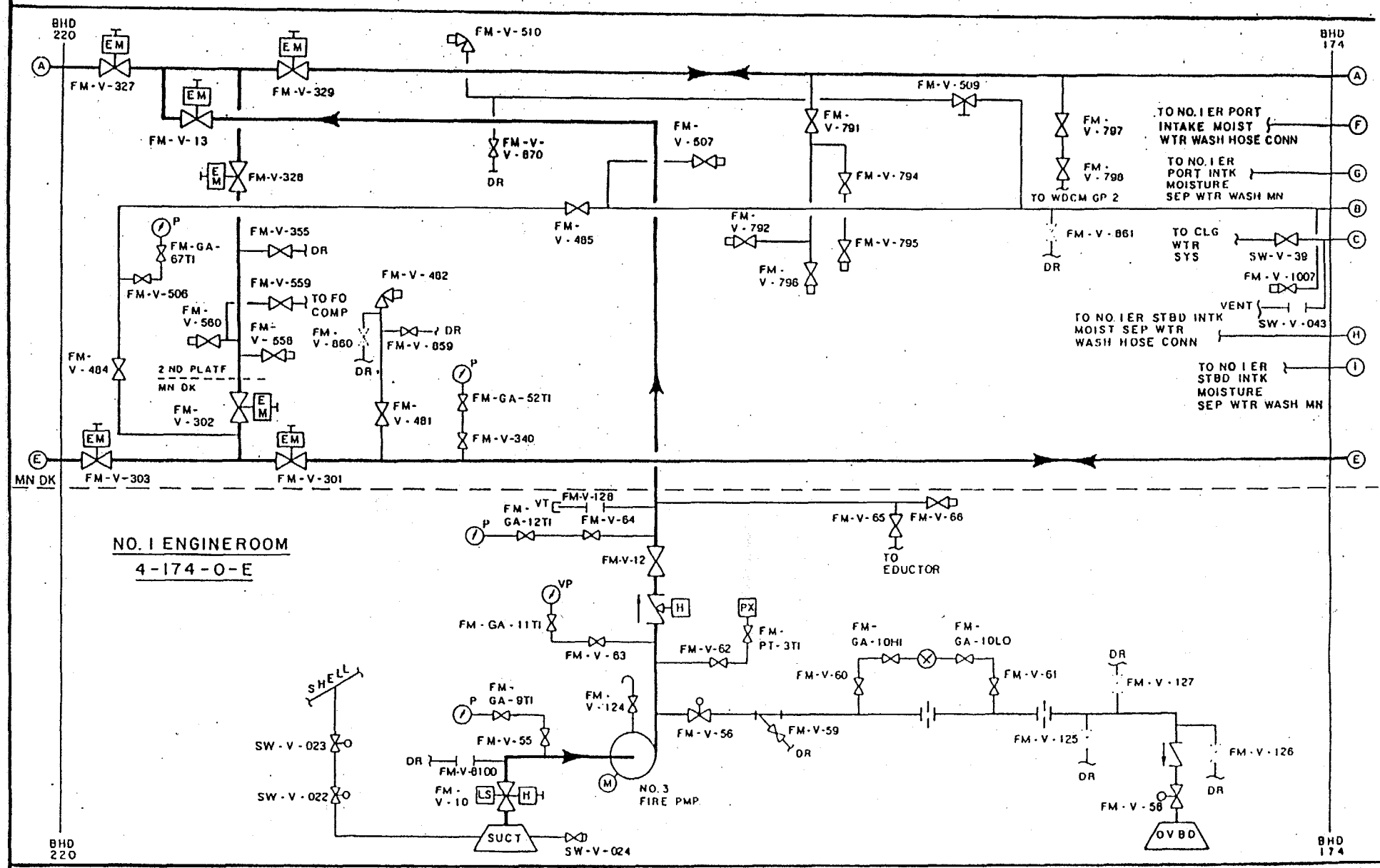

CODE DFM/0789/022696

PAGE 3 OF 6

DFM/0789C

DIAGRAM FOR FIREMAIN SYSTEM

SD. NO. DFM

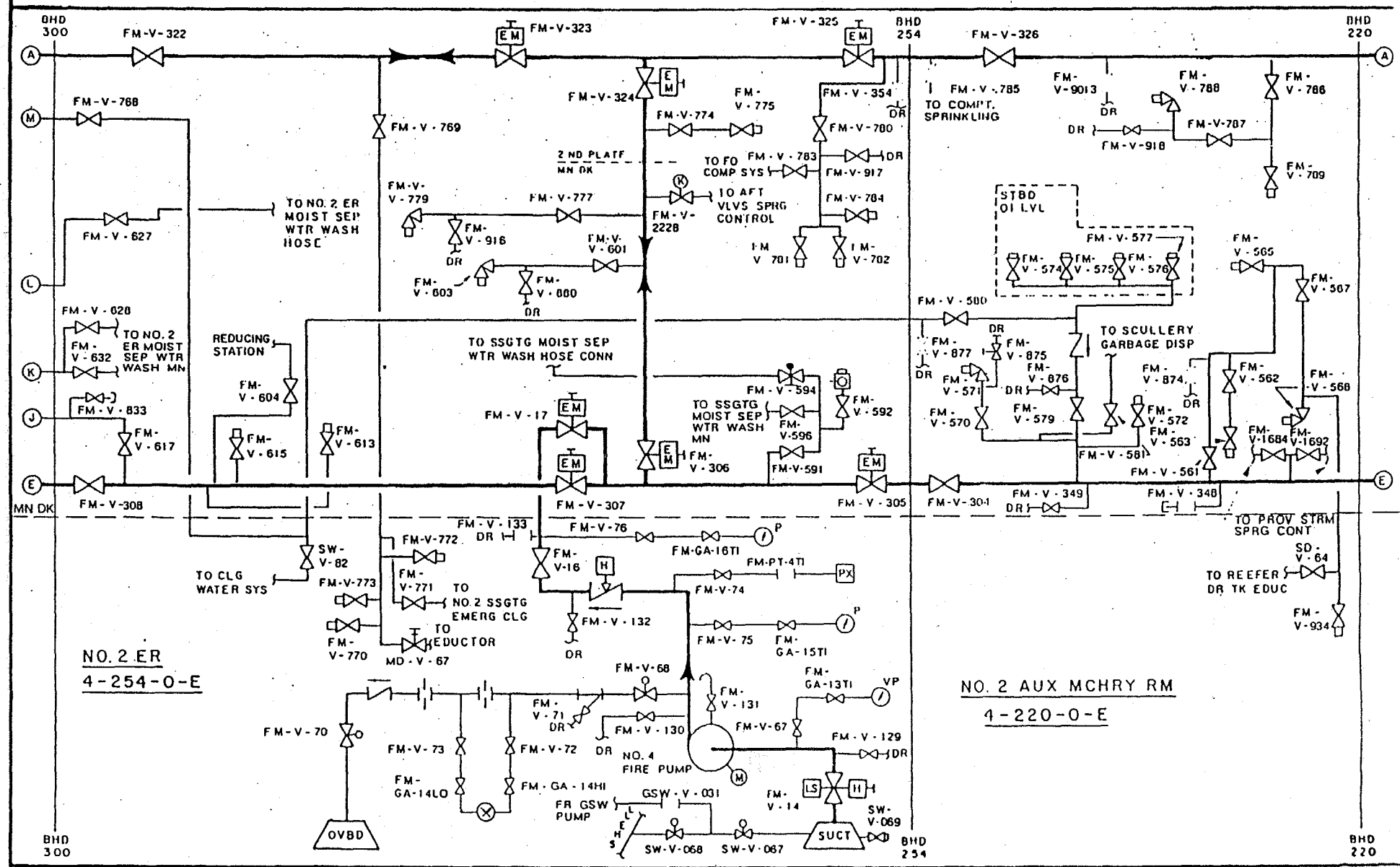

CODE DFM/0789/022696

PAGE 4 OF 6

DFM/0789D

..AGRAM FOR FIREMAIN SYSTEM

SL. NO. DFM

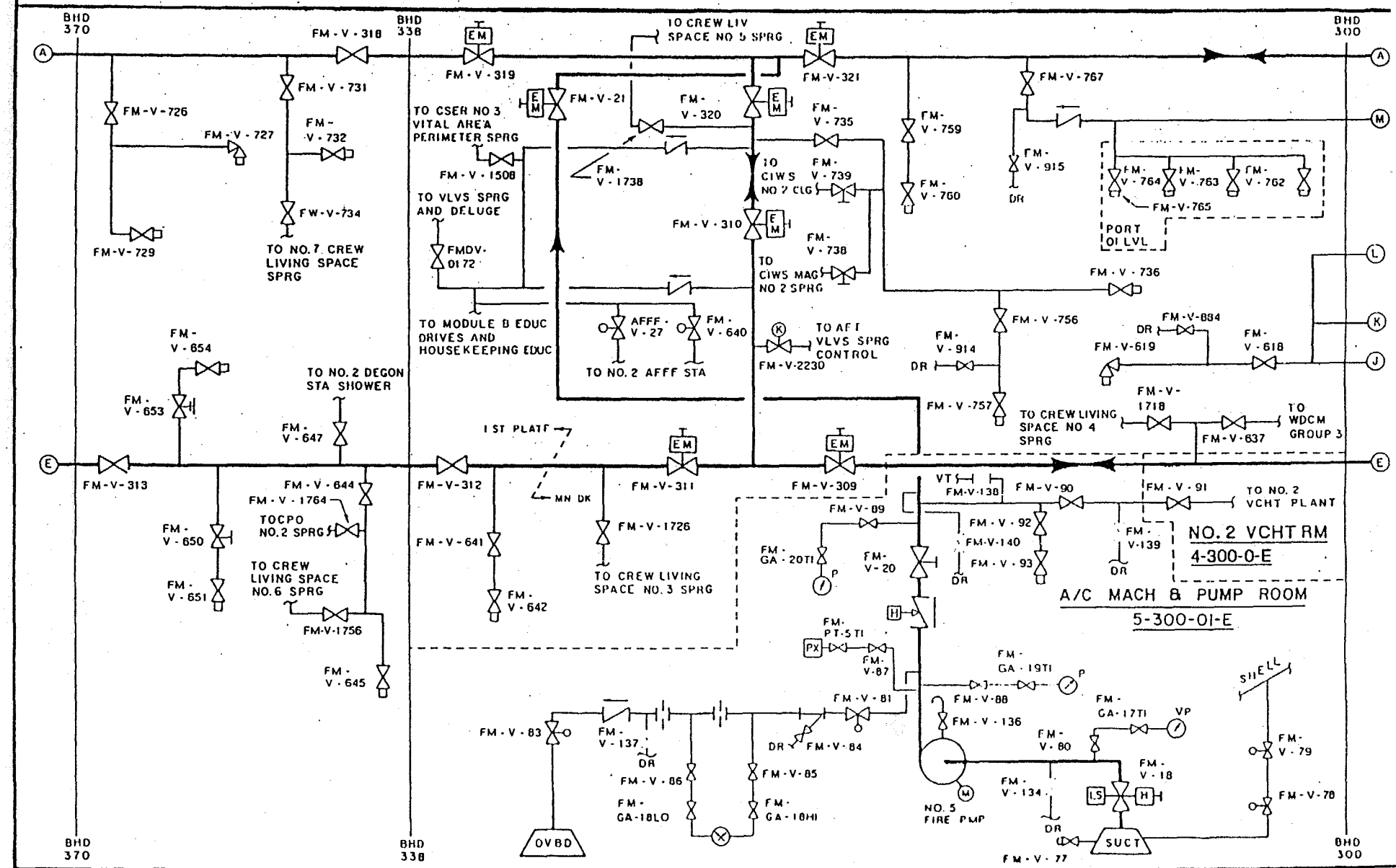

CODE DFM/0789/022696

PAGE 5 OF 6

DFM/0789E

D.AGRAM FOR FIREMAIN SYSTEM

SD. NO. DFM

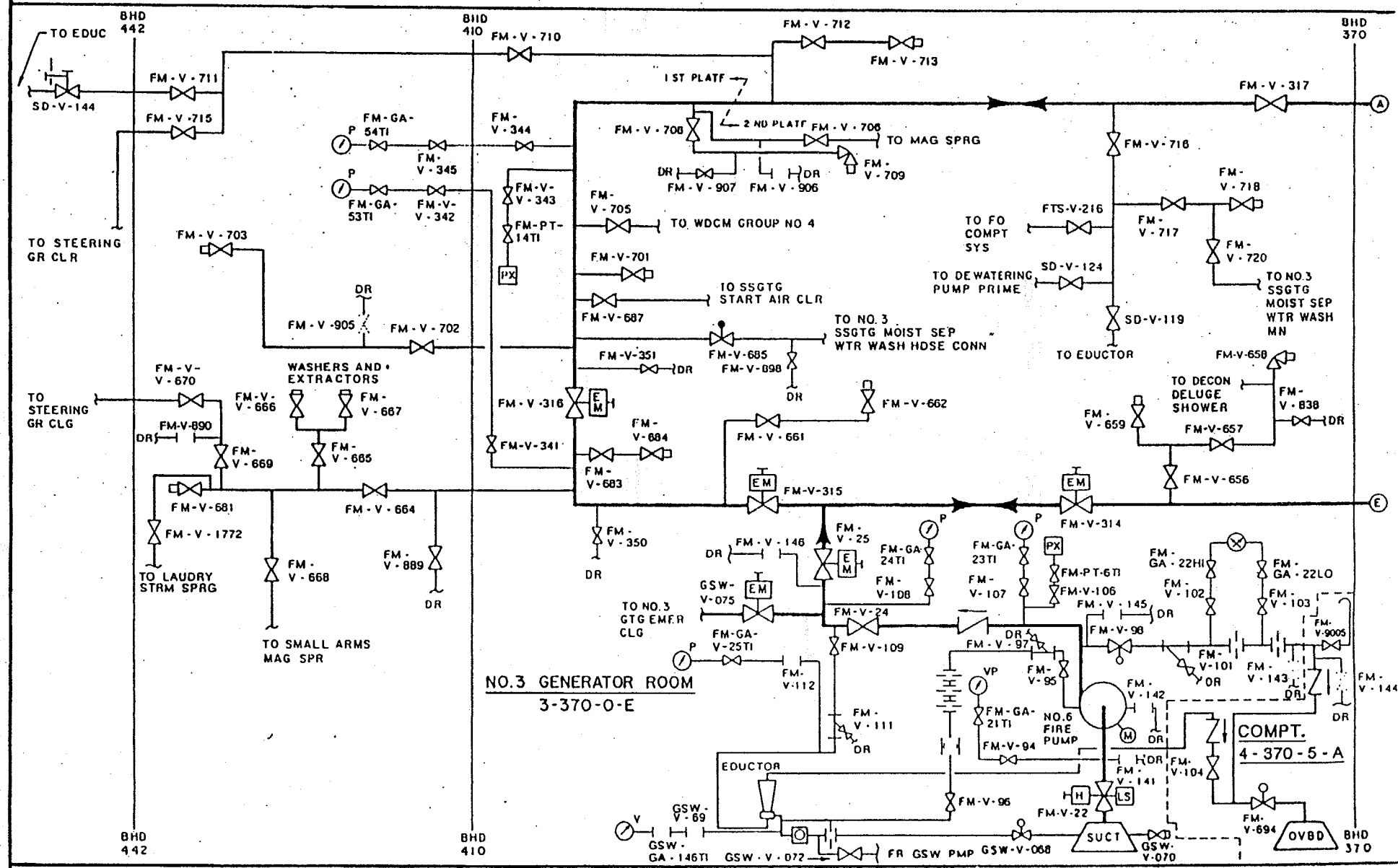

CODE DFM/0789/022696

PAGE 6 OF 6

DFM/0789F

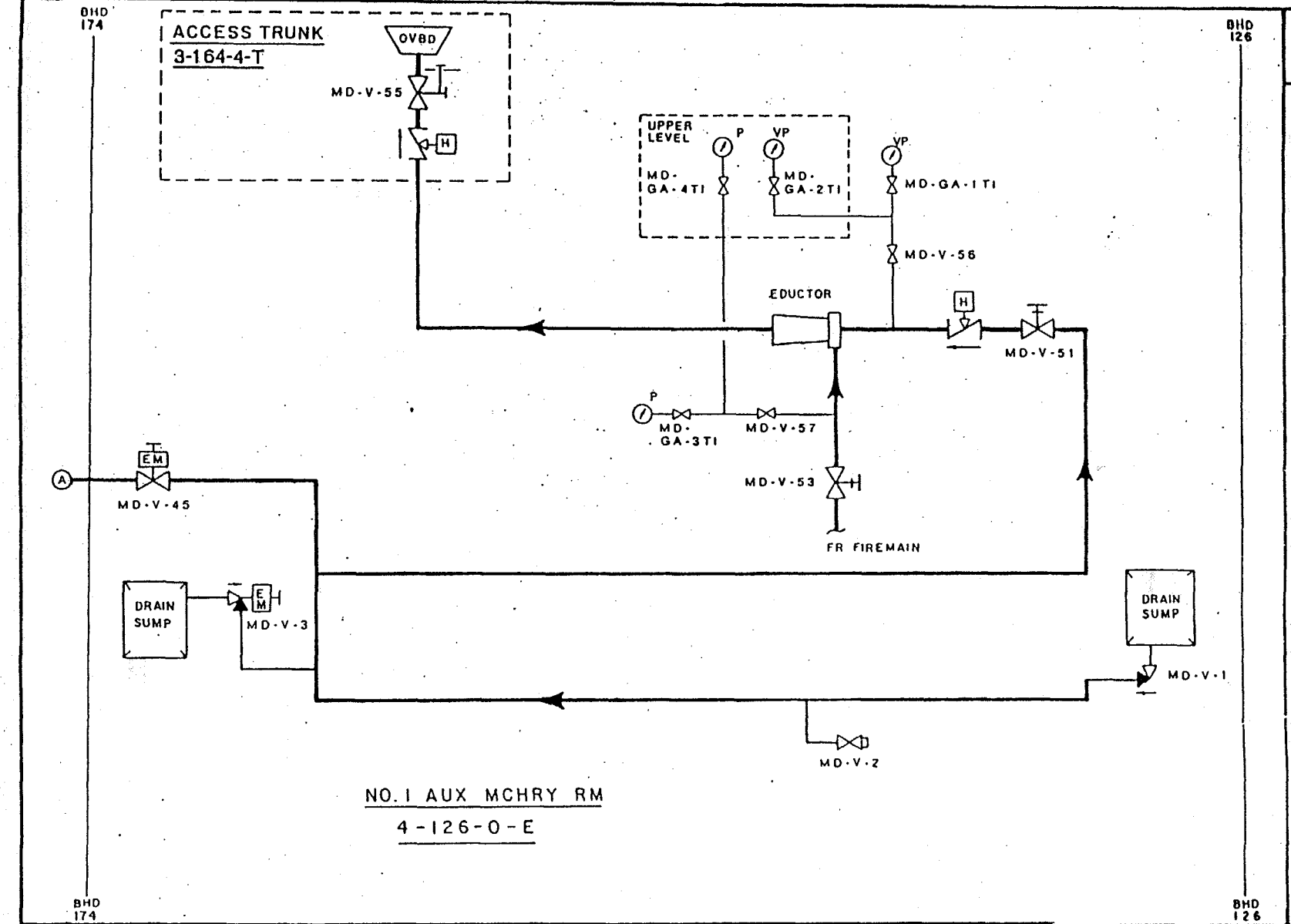

LEGEND

- STOP VALVE
- STOP CHECK
- ANGLE VALVE
- SWING CHECK VAL
- RELIEF VALVE
- EM — ELECTRIC MOTOR OPERATED
- EM — ELECTRIC MOTOR OPERATED STOP CHECK VALVE
- LOCALLY/REMOTE OPERATED IN SAM SPACE
- OPERATED LOCAL ADJACENT SPACE
- H — HYDRAULICLY OPERATED LIFT CHECK VALVE
- P — PRESSURE GAUGE
- VP — VACUUM PRESSURE GAUGE
- HOSE CONNECTIO

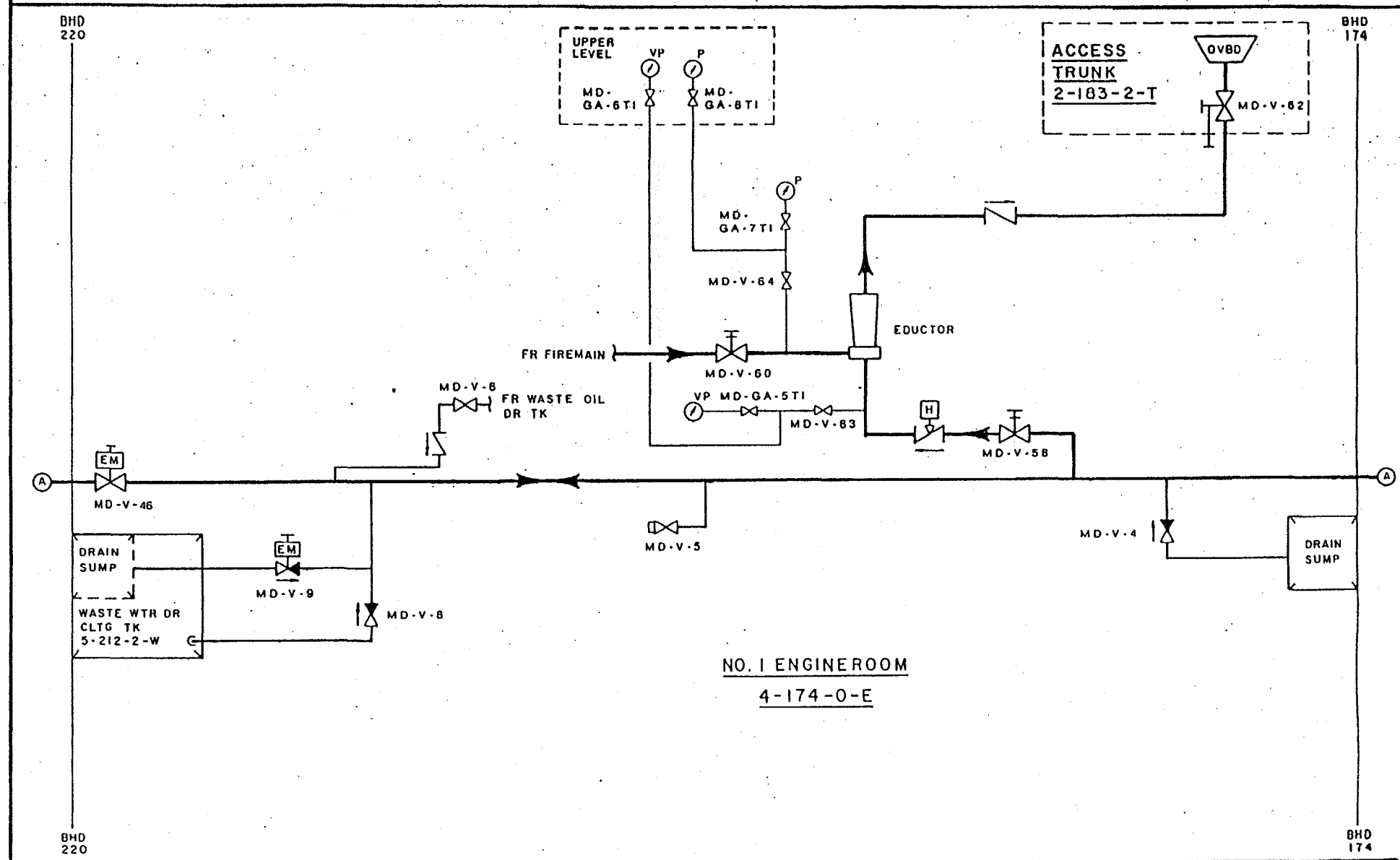
BHD 220
UPPER LEVEL
VP
P
MD-GA-6TI
MD-GA-8TI
ACCESS TRUNK 2-183-2-T
OVBD
MD-V-62
BHD 174
P
MD-GA-7TI
MD-V-64
EDUCTOR
FR FIREMAIN
MD-V-60
MD-V-6
FR WASTE OIL DR TK
VP MD-GA-5TI
MD-V-63
H
MD-V-58
EM
MD-V-46
A
A
MD-V-5
MD-V-4
DRAIN SUMP
EM
MD-V-9
MD-V-8
DRAIN SUMP
WASTE WTR DR CLTG TK 5-212-2-W
NO. I ENGINEROOM
4-174-0-E
BHD 220
BHD 174

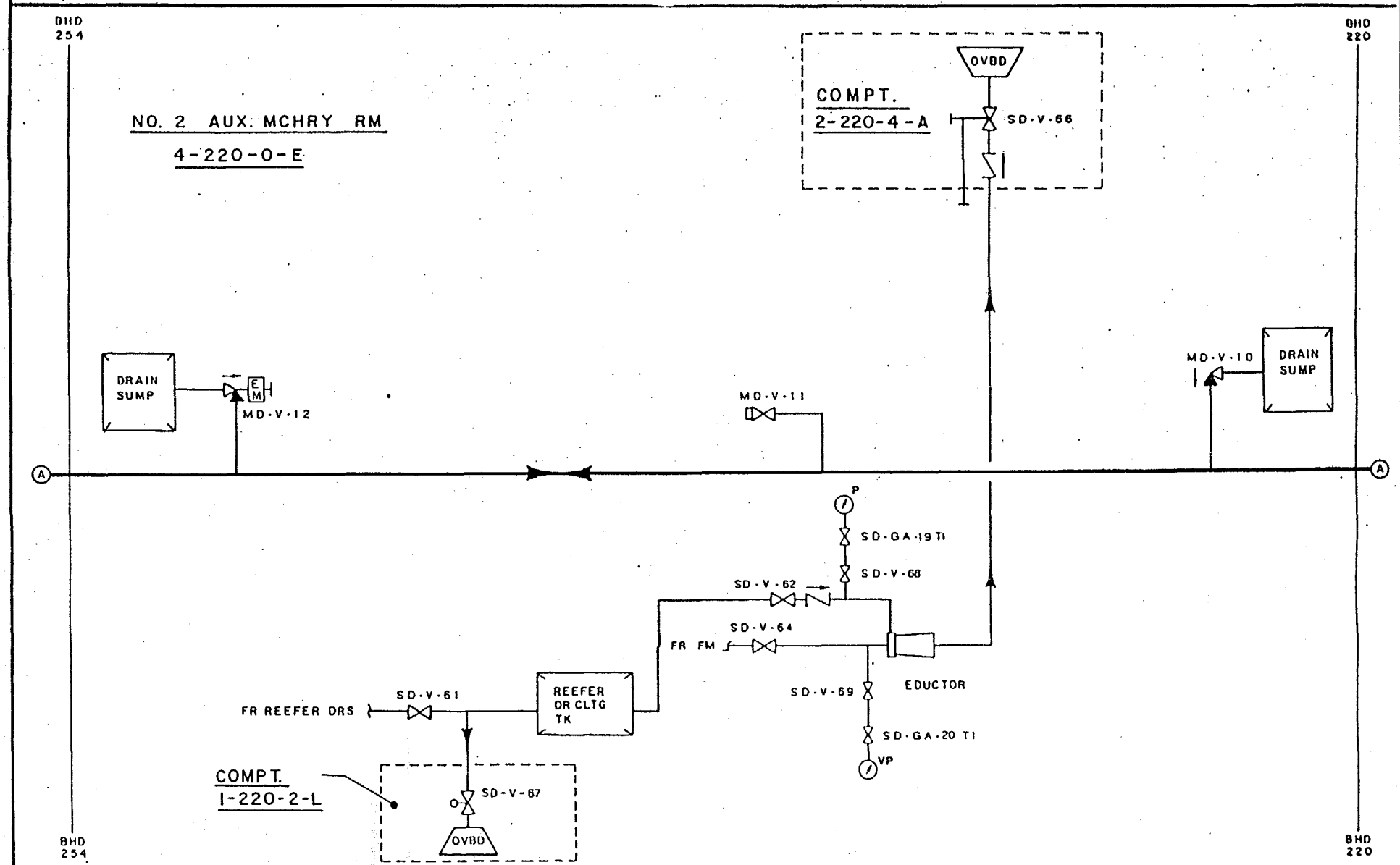
BHD 254
BHD 220
NO. 2 AUX. MCHRY RM
4-220-0-E
COMPT.
2-220-4-A
OVBD
SD-V-66
DRAIN SUMP
E M
MD-V-12
MD-V-11
MD-V-10
DRAIN SUMP
A
A
P
SD-GA-19 TI
SD-V-68
SD-V-62
SD-V-64
FR FM
EDUCTOR
SD-V-69
SD-GA-20 TI
VP
REEFER DR CLTG TK
SD-V-61
FR REEFER DRS
COMPT.
1-220-2-L
SD-V-67
OVBD
BHD 254
BHD 220

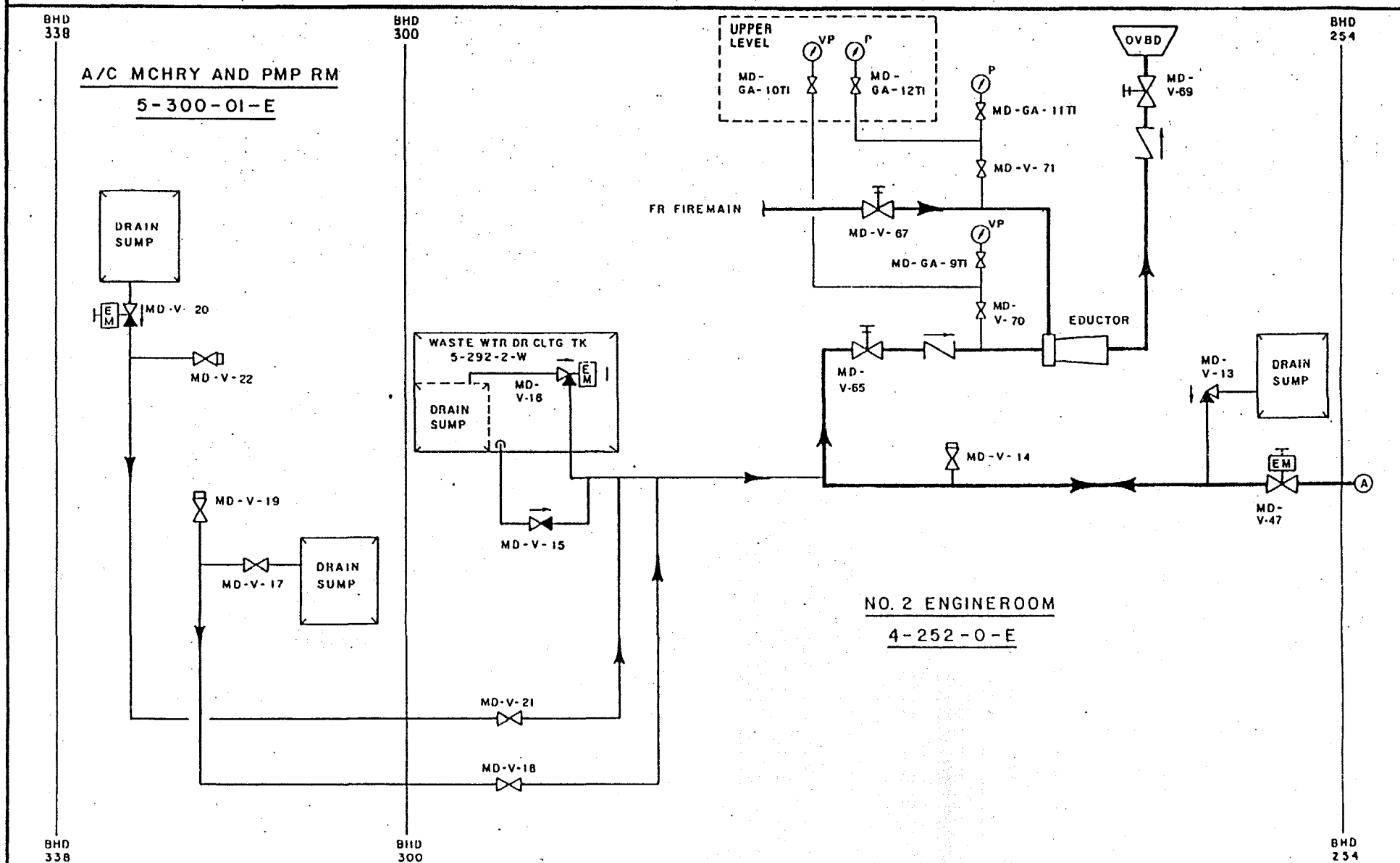
BHD 338
BHD 300
BHD 254
A/C MCHRY AND PMP RM
5-300-01-E
DRAIN SUMP
MD-V-20
MD-V-22
MD-V-19
MD-V-17
DRAIN SUMP
WASTE WTR DR CLTG TK
5-292-2-W
MD-V-16
DRAIN SUMP
MD-V-15
MD-V-21
MD-V-18
UPPER LEVEL
VP
P
MD-GA-10TI
MD-GA-12TI
P
MD-GA-11TI
MD-V-71
FR FIREMAIN
MD-V-67
VP
MD-GA-9TI
MD-V-70
OVBD
MD-V-69
EDUCTOR
MD-V-65
MD-V-14
MD-V-13
DRAIN SUMP
MD-V-47
A
NO. 2 ENGINEROOM
4-252-0-E

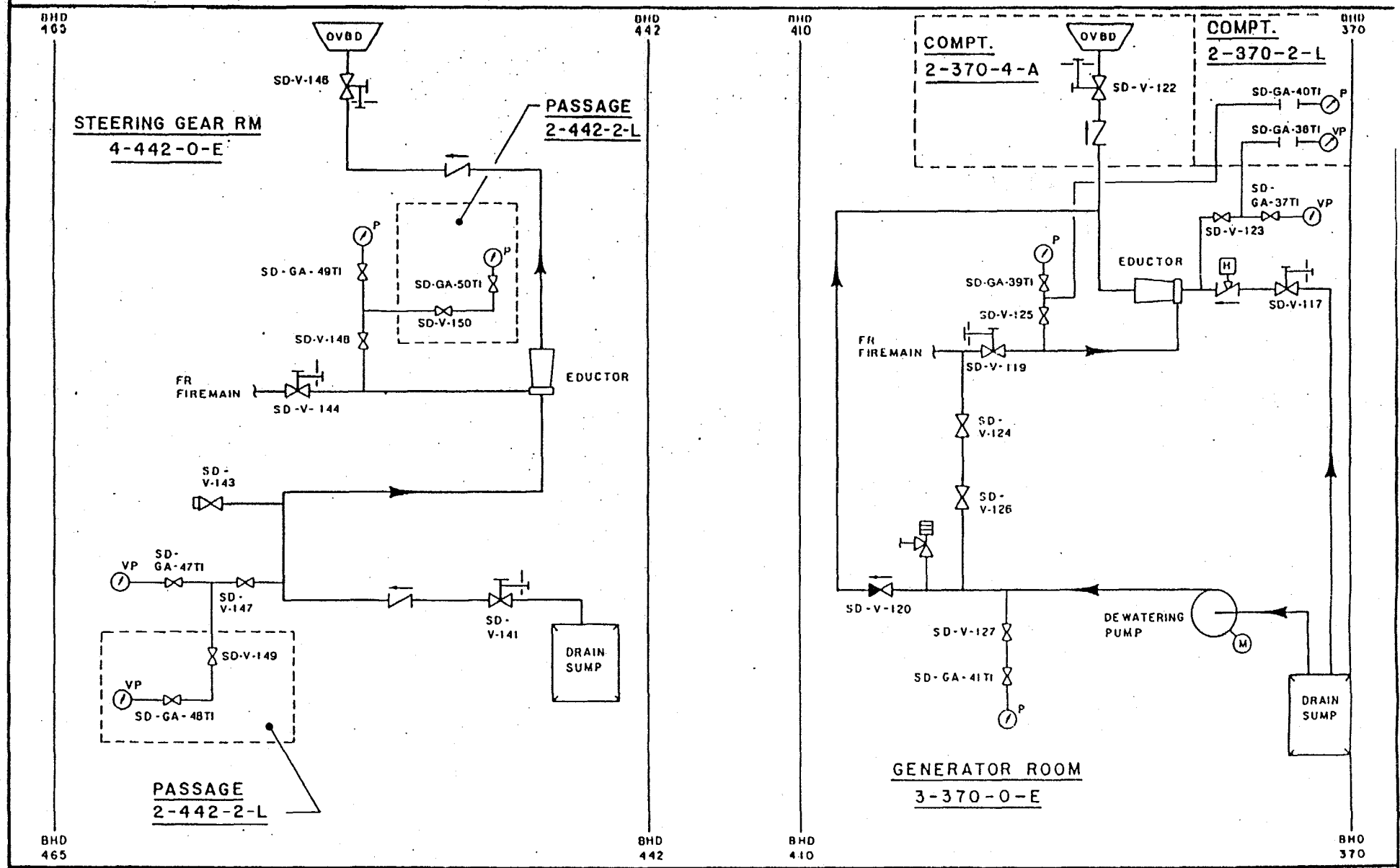
BHD 465
BHD 442
BHD 410
BHD 370
OVBD
SD-V-146
STEERING GEAR RM
4-442-0-E
PASSAGE
2-442-2-L
SD-GA-49TI
SD-GA-50TI
SD-V-150
SD-V-148
FR
FIREMAIN
SD-V-144
EDUCTOR
SD-V-143
VP
SD-GA-47TI
SD-V-147
SD-V-141
DRAIN SUMP
SD-V-149
SD-GA-48TI
PASSAGE
2-442-2-L
COMPT.
2-370-4-A
SD-V-122
COMPT.
2-370-2-L
SD-GA-40TI
SD-GA-38TI
SD-GA-37TI
SD-V-123
SD-GA-39TI
SD-V-125
SD-V-117
SD-V-119
SD-V-124
SD-V-126
SD-V-120
SD-V-127
SD-GA-41TI
DEWATERING PUMP
DRAIN SUMP
GENERATOR ROOM
3-370-0-E

DIAGRAM FOR AFFF MACHINERY SPACE F/F SYSTEM

SD. NO. DAFFF

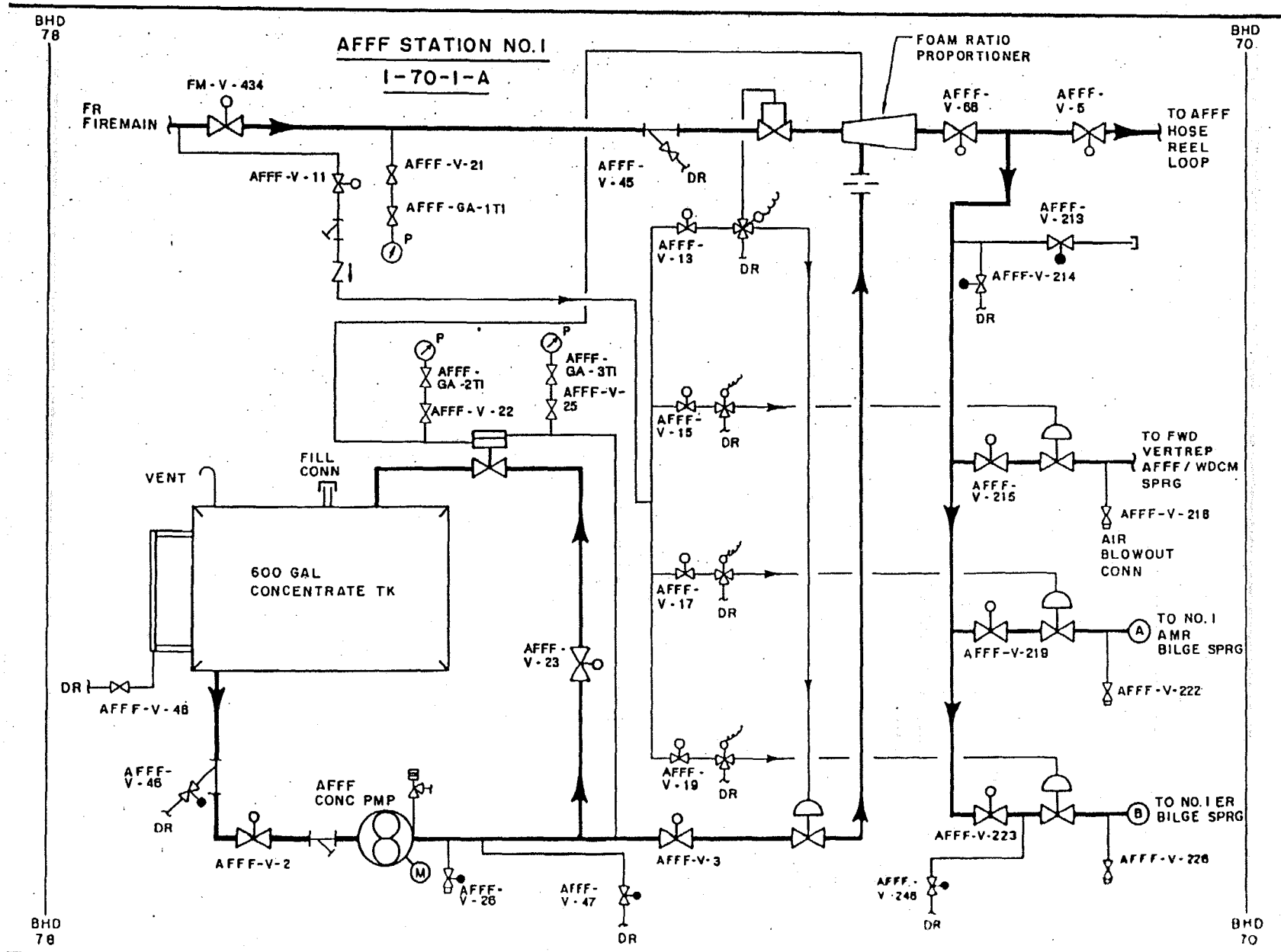

LEGEND

- STOP VALVE
- STOP VALVE, LOCKED OPEN
- STOP VALVE, LOCKED SHUT
- 3-WAY SOLENOID
- 3-WAY INTERLOCK VALVE
- BALANCE VALVE
- POWERTROL VALVE
- HYTROL VALVE
- RELIEF VALVE
- Y STRAINER W/ DRAIN
- HOSE CONNECTION
- CAPPED CONNECTION
- PRESSURE GAUGE
- DUPLEX PRESSURE GAUGE
- SPRINKLER NOZZEL

DIAGRAM FOR AFFF MACHINERY SPACE F/F SYSTEM

SD. NO. DAFFF

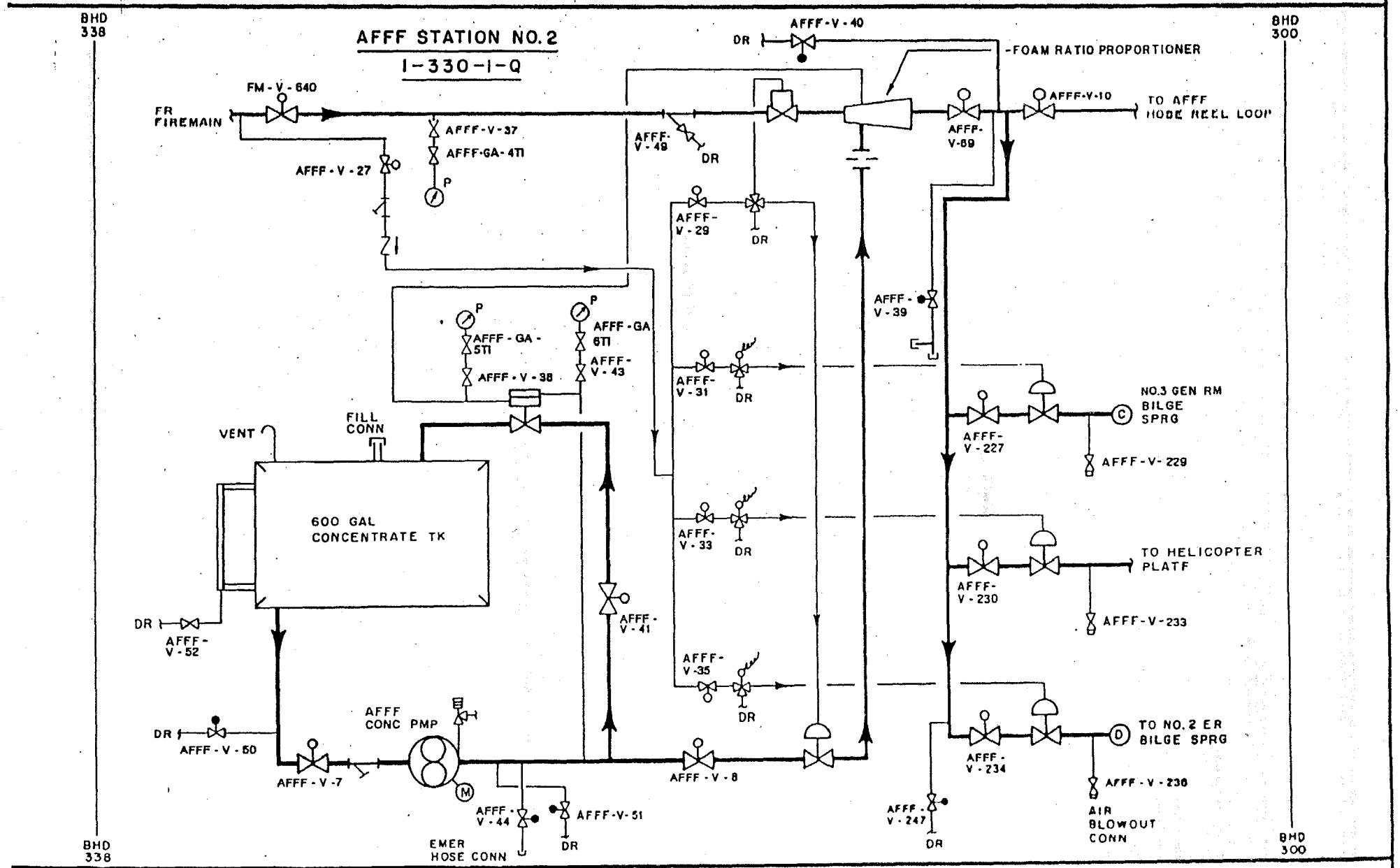

CODE DAFFF/0406/052998

DIAGRAM FOR AFFF MACHINERY SPACE F/F SYSTEM

SD. NO. DAFFF

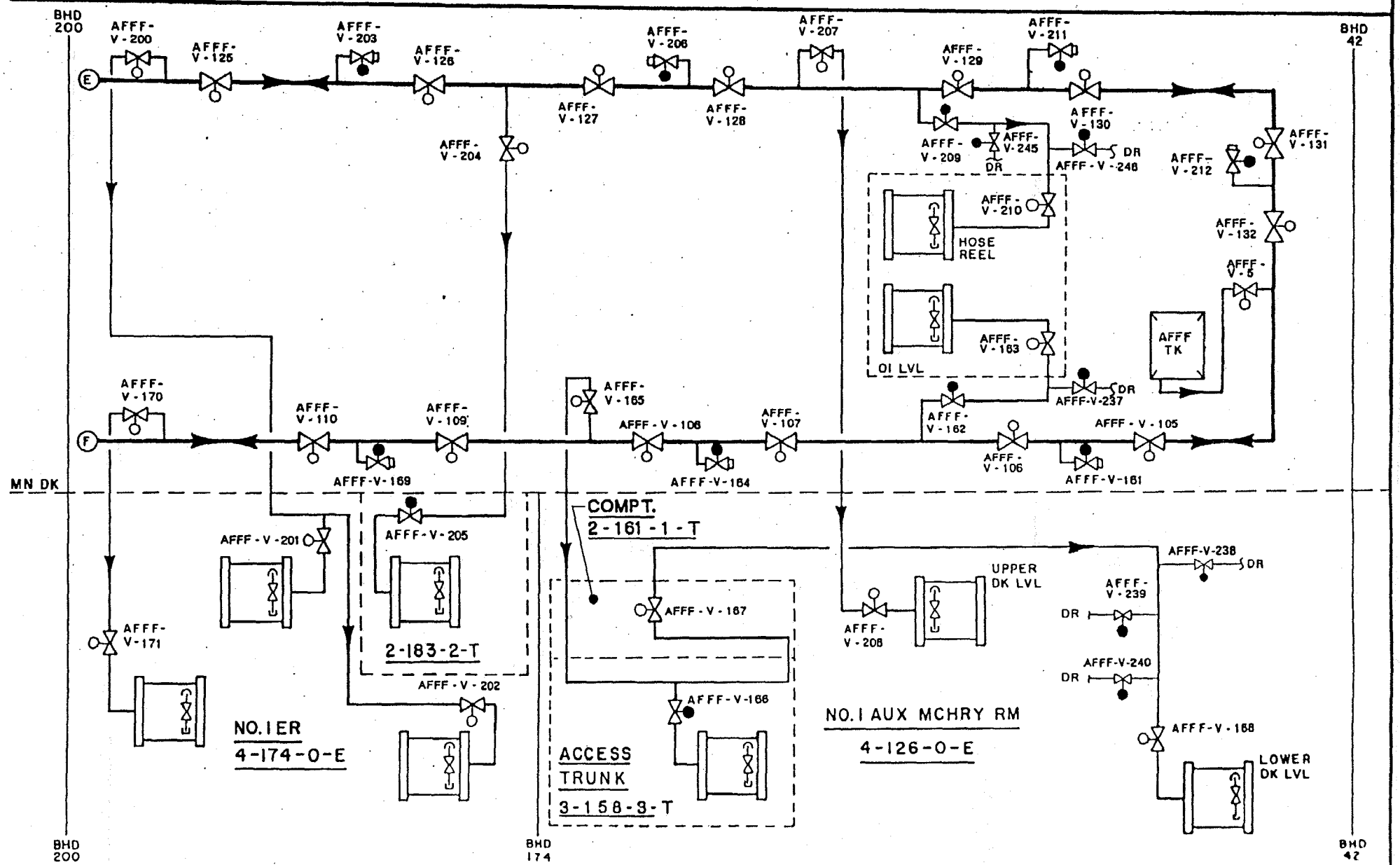

DIAGRAM FOR AFFF MACHINERY SPACE F/F SYSTEM

SD. NO. DAFFF

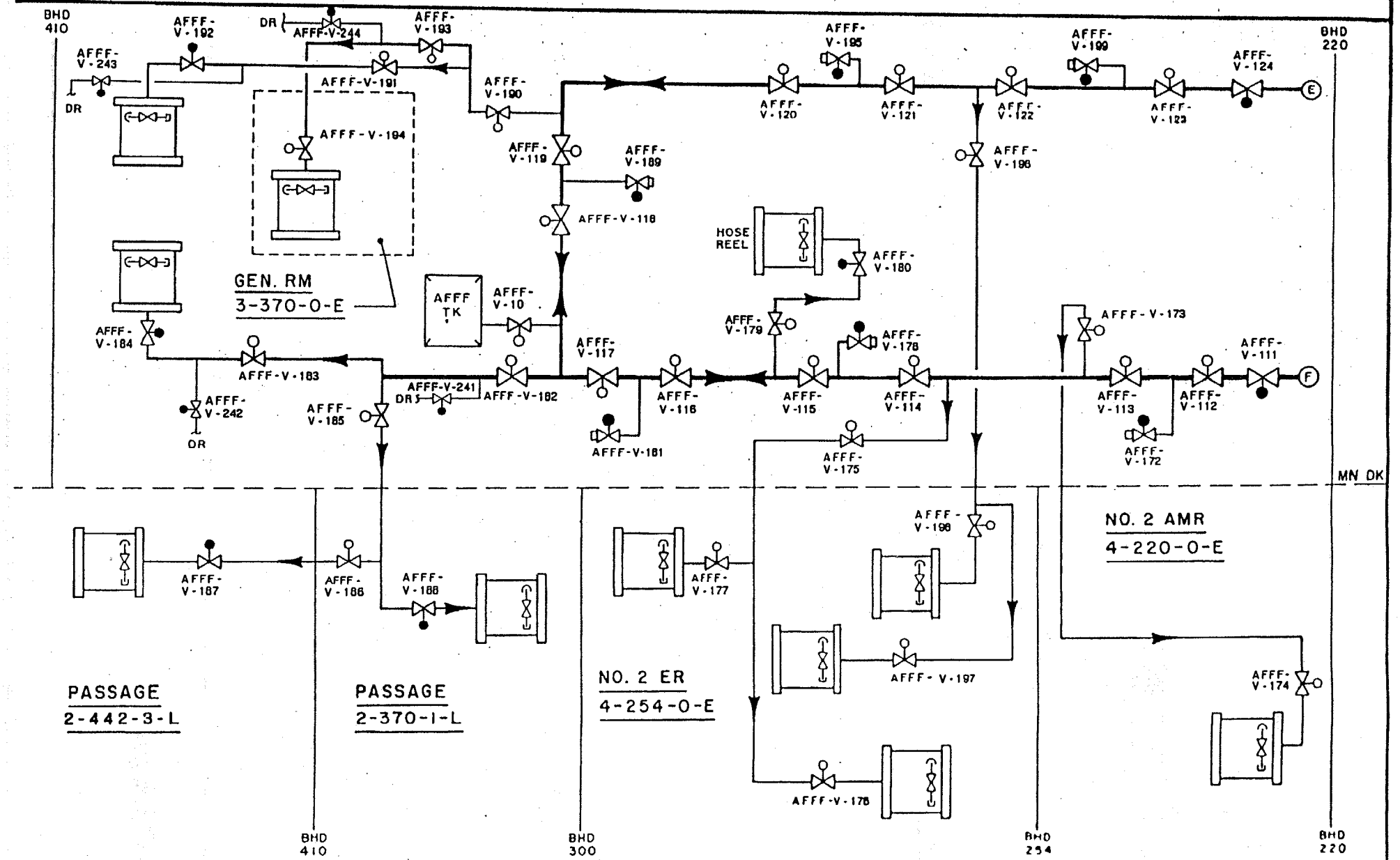

DIAGRAM FOR AFFF MACHINERY SPACE F/F SYSTEM

SD.NO. DAFFF

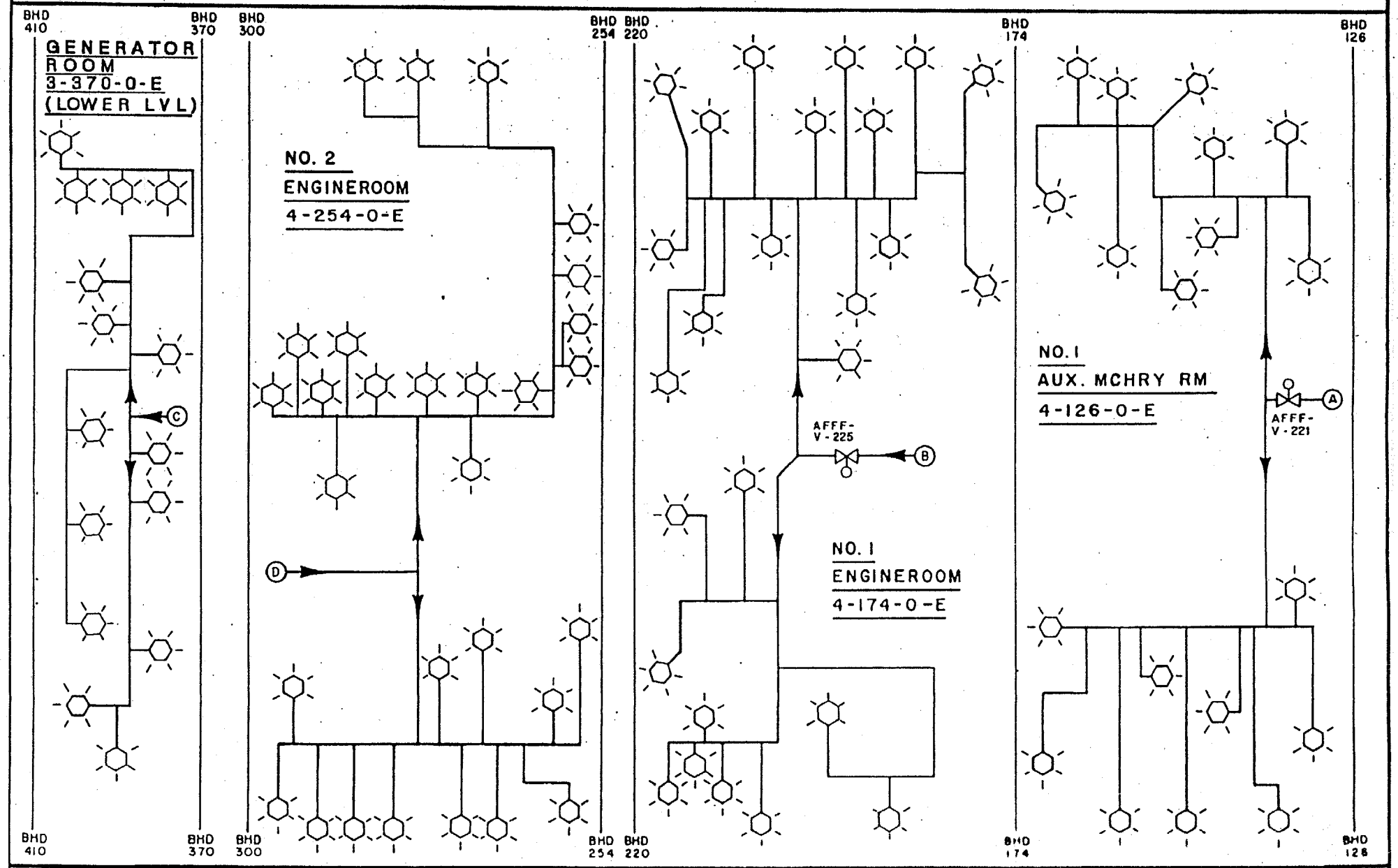

DIAGRAM FOR ELECTRICAL GENERATING SYSTEM

SD. NO. DLS

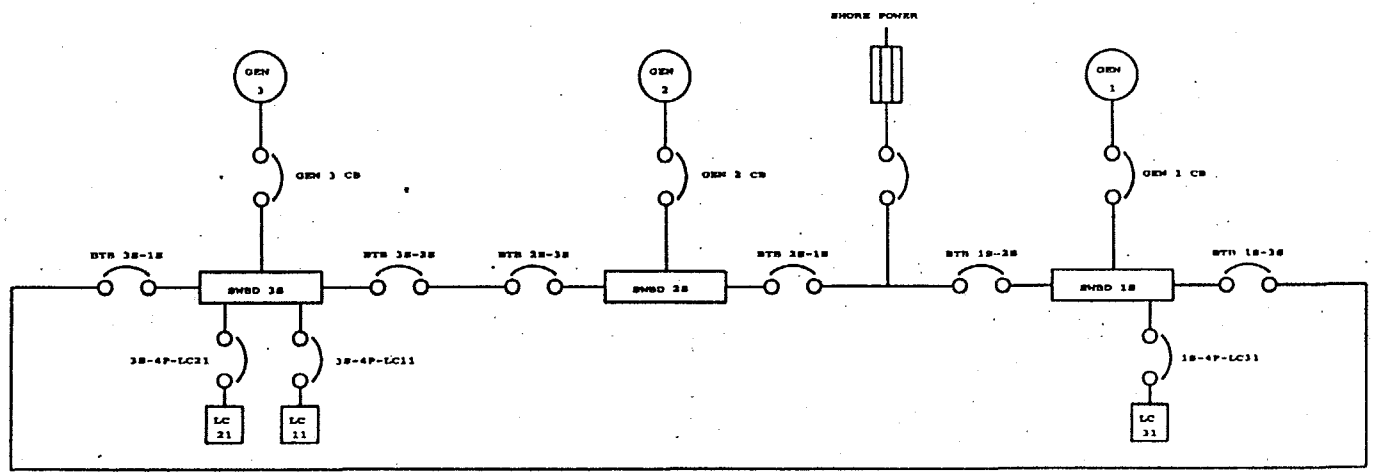

LEGEND

SHORE POWER CONNECTION

CIRCUIT BREAKER

GENERATOR

SWITCHBOARD

LOAD CENTER

CODE DLS/0486/0391

DIAGRAM FOR HIGH-PRESSURE AIR SYSTEM

SD. NO. DHPA

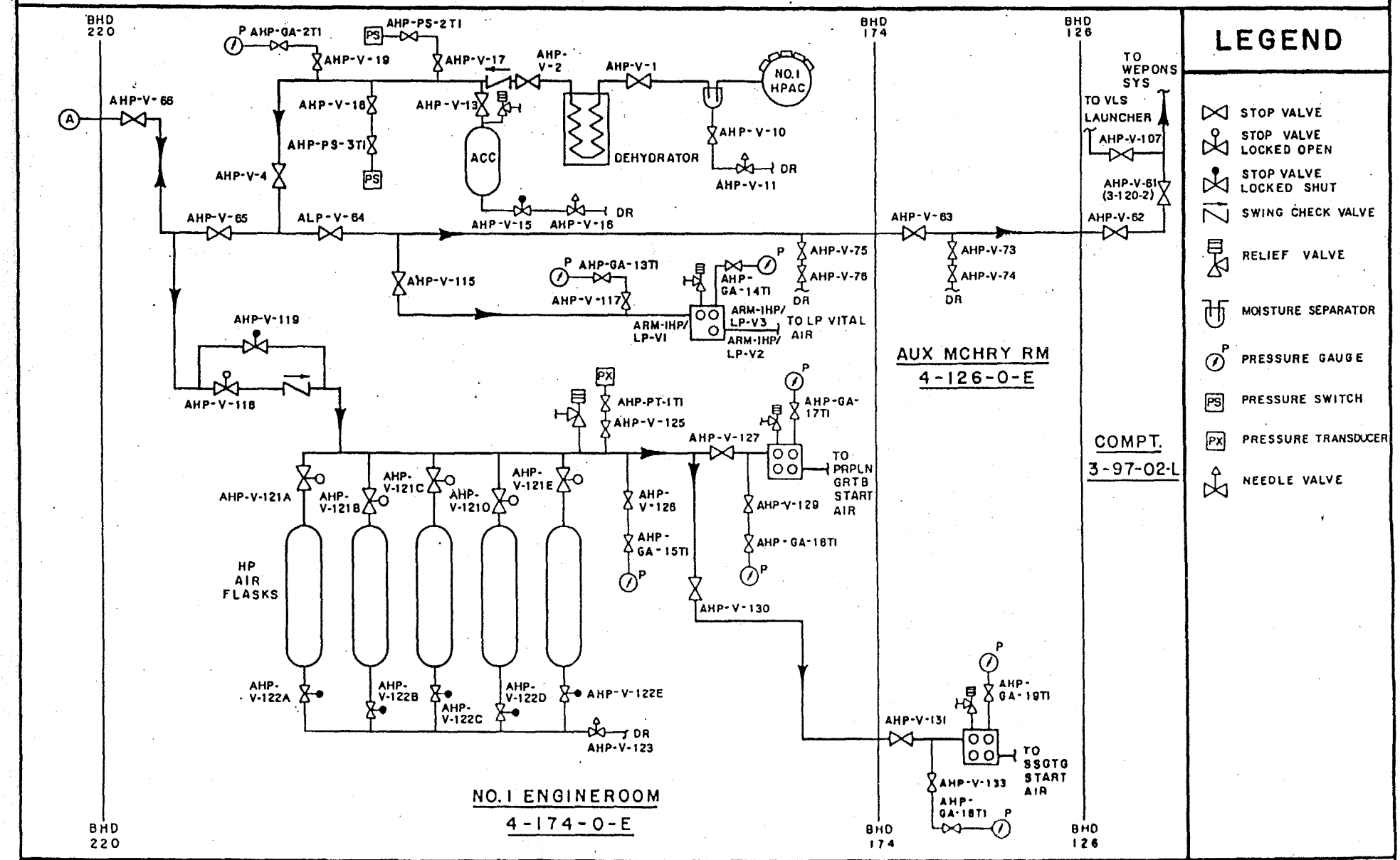

LEGEND

- STOP VALVE
- STOP VALVE LOCKED OPEN
- STOP VALVE LOCKED SHUT
- SWING CHECK VALVE
- RELIEF VALVE
- MOISTURE SEPARATOR
- PRESSURE GAUGE
- PRESSURE SWITCH
- PRESSURE TRANSDUCER
- NEEDLE VALVE

DIAGRAM FOR HIGH-PRESSURE AIR SYSTEM

SD. NO. DHPA

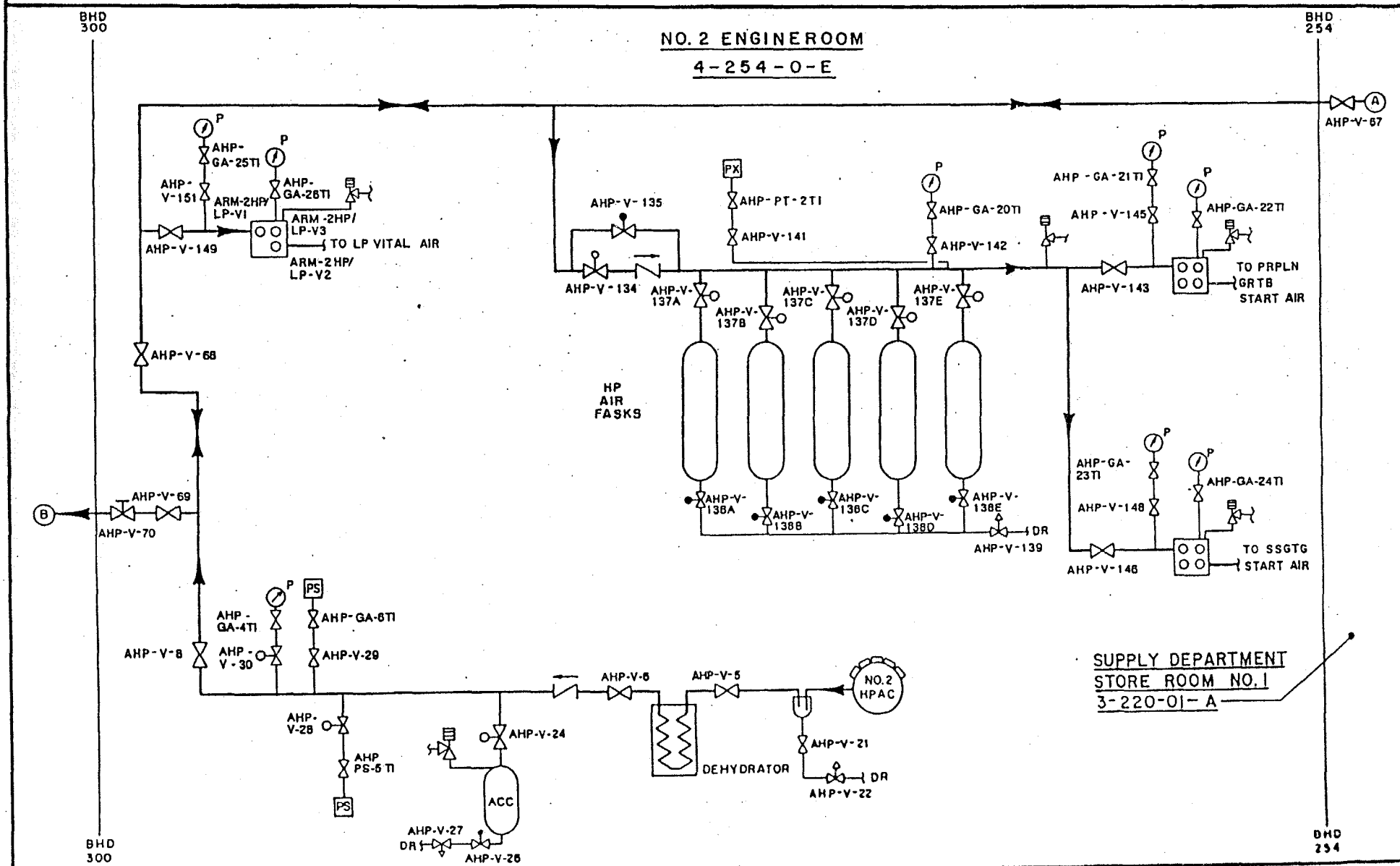

CODE DHPA/0461/112195

DIAGRAM FOR HIGH-PRESSURE AIR SYSTEM

SD. NO. DHPA

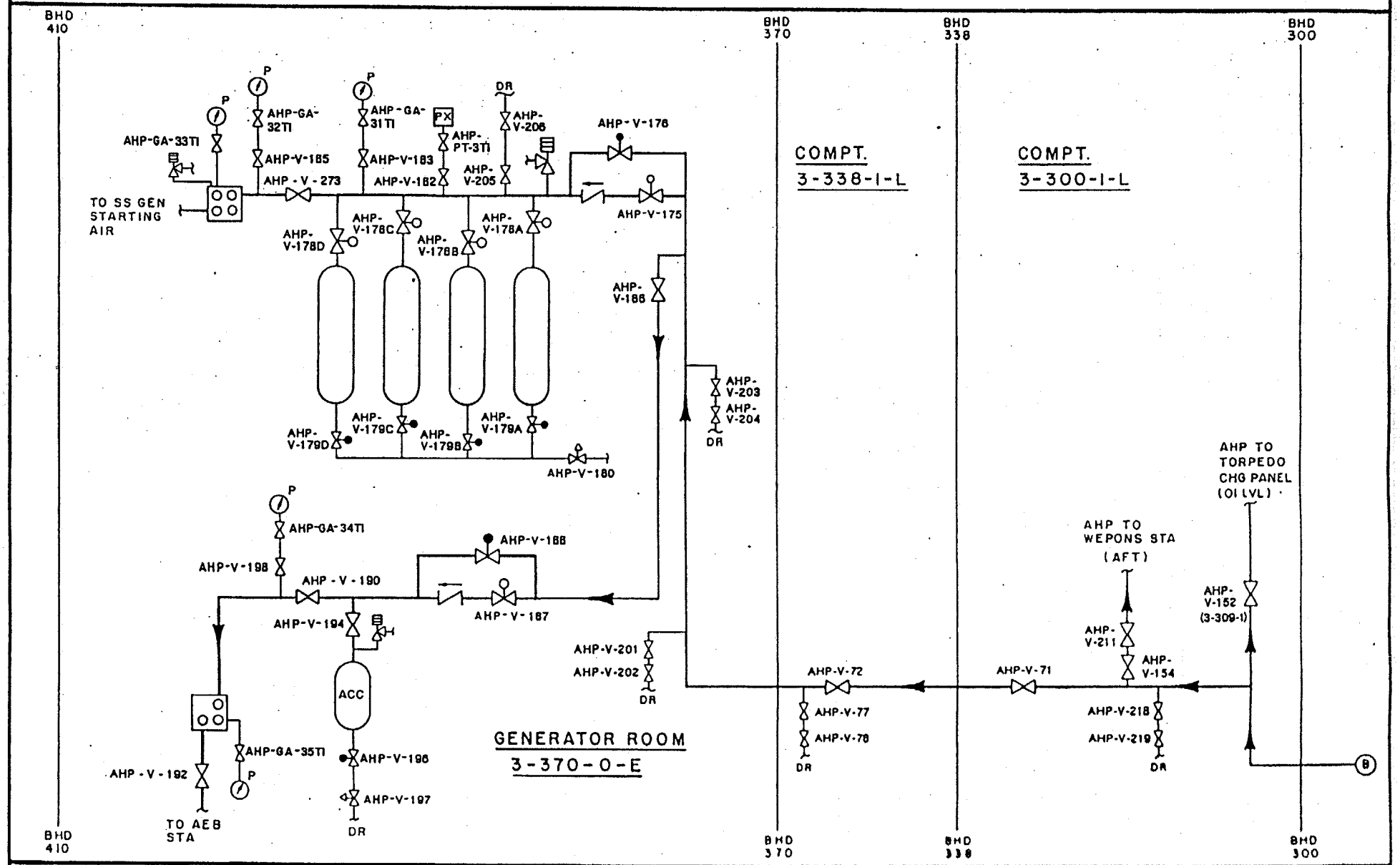

Tab J

DIAGRAM FOR JP-5 TRANSFER SYSTEM

SD. NO. DJPT

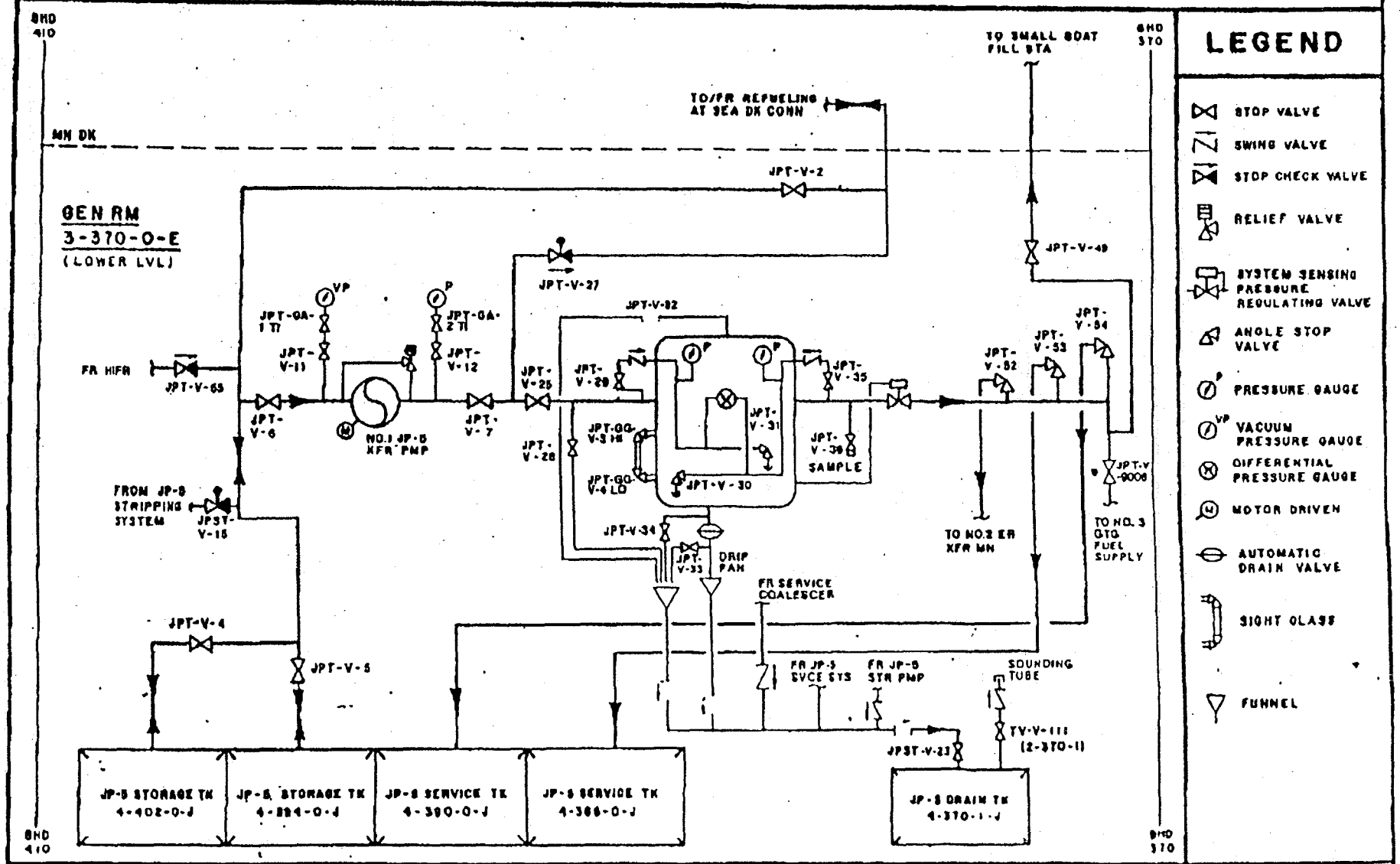

LEGEND

- STOP VALVE
- SWING VALVE
- STOP CHECK VALVE
- RELIEF VALVE
- SYSTEM SENSING PRESSURE REGULATING VALVE
- ANGLE STOP VALVE
- PRESSURE GAUGE
- VACUUM PRESSURE GAUGE
- DIFFERENTIAL PRESSURE GAUGE
- MOTOR DRIVEN
- AUTOMATIC DRAIN VALVE
- SIGHT GLASS
- FUNNEL

CODE DJPT/0191/060697

DIAGRAM FOR FUEL OIL SERVICE SYSTEM

SD. No. DFO

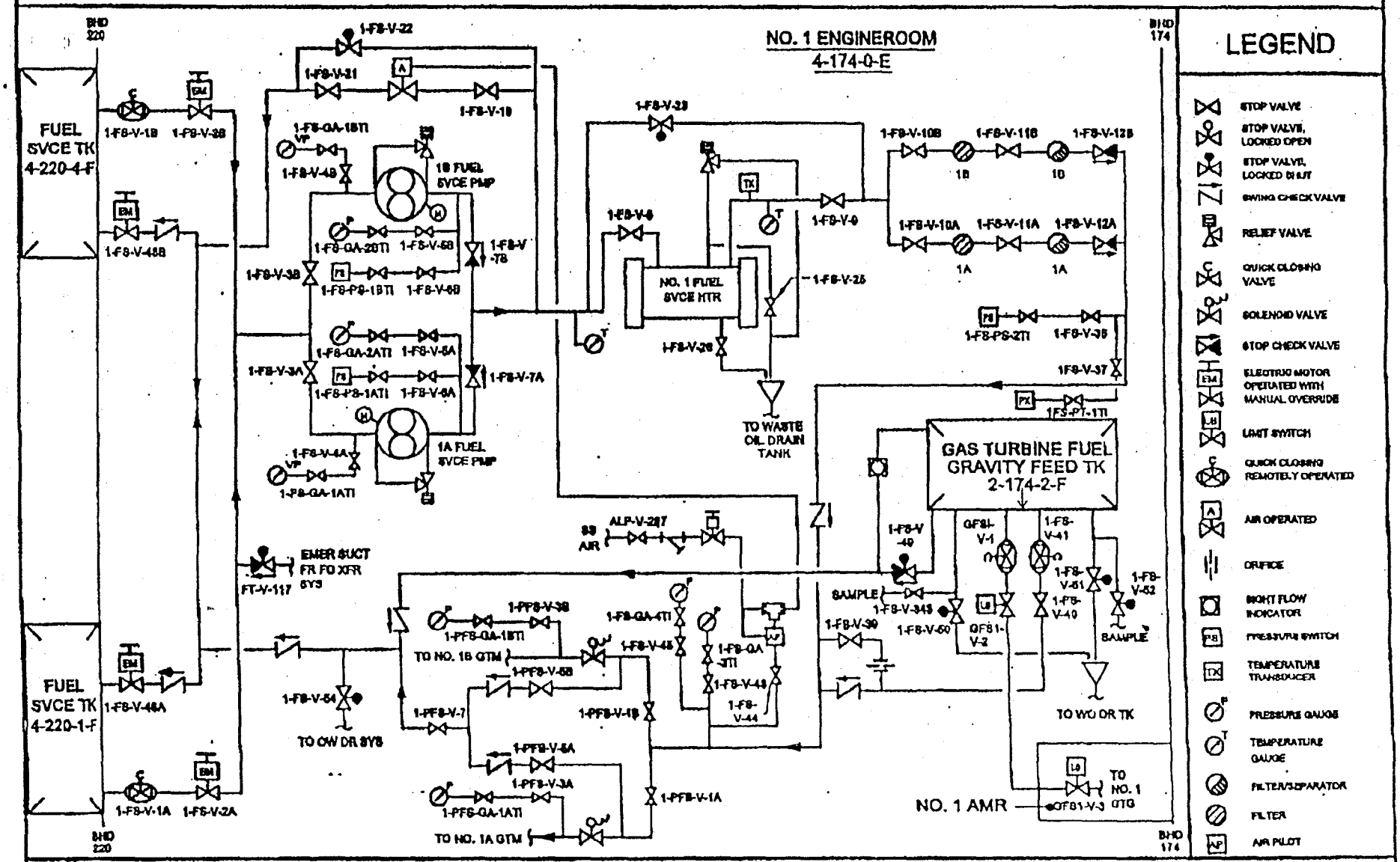

CODE : DFO/0973/011800

PAGE 1 OF 3

DIAGRAM FOR FUEL OIL SERVICE SYSTEM

SD. NO. DFO

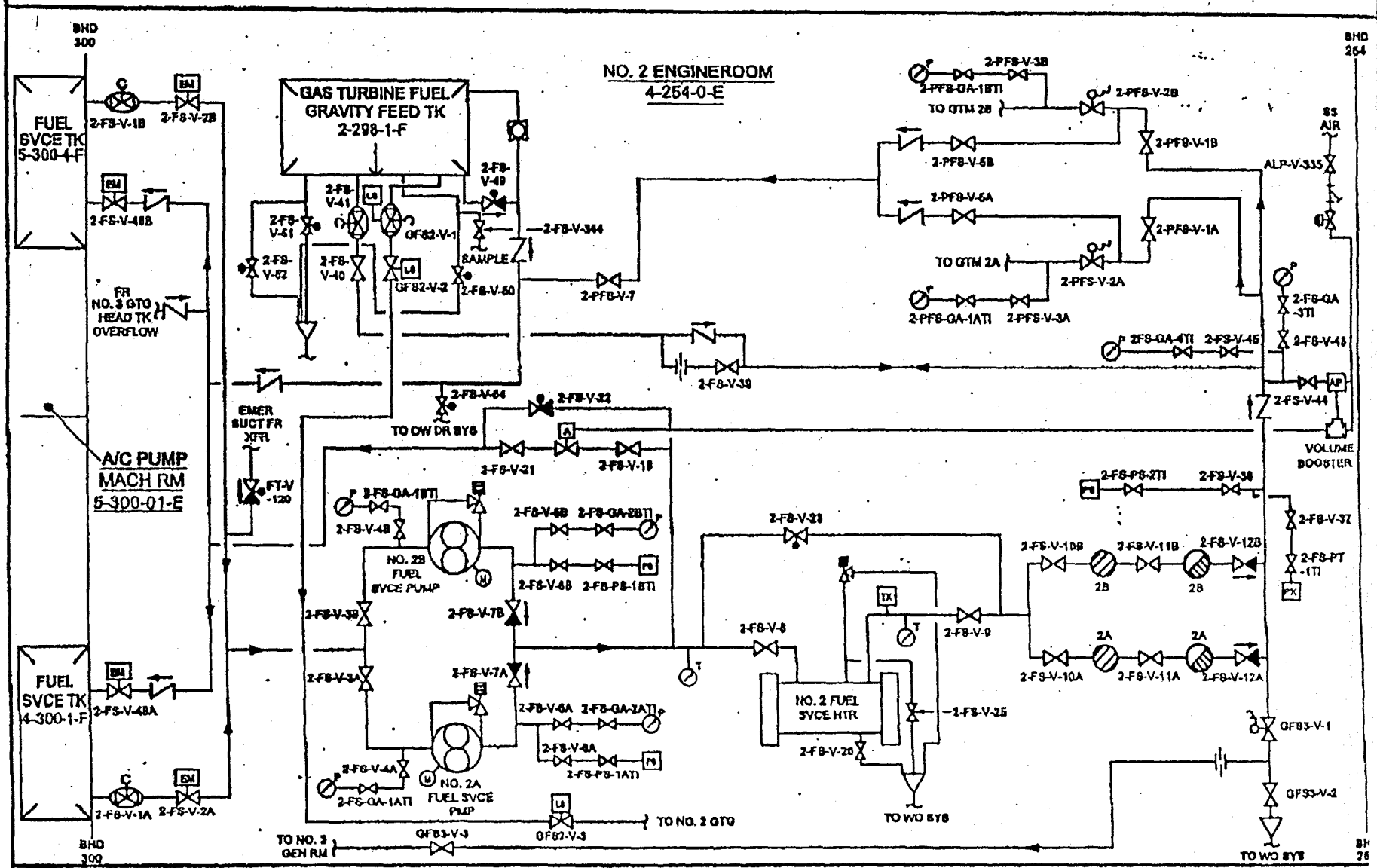

CODE DFO/0973/011800

PAGE 2 OF 3

DIAGRAM FOR FUEL OIL SERVICE SYSTEM

SD. NO. DFO

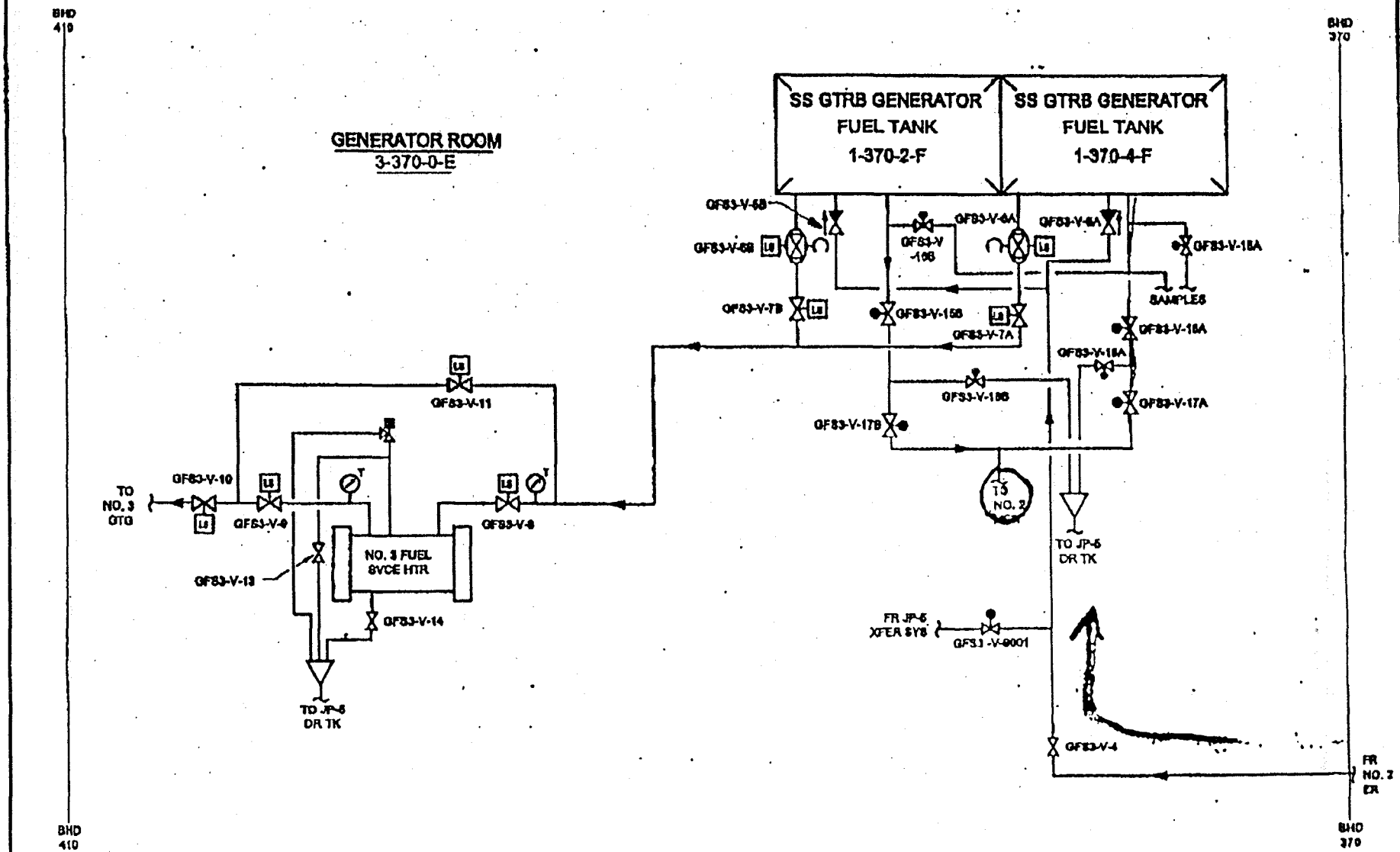

CODE DFO/0973/011800

PAGE 3 OF 3